WovenGold
pamper your senses

Niwa Technical

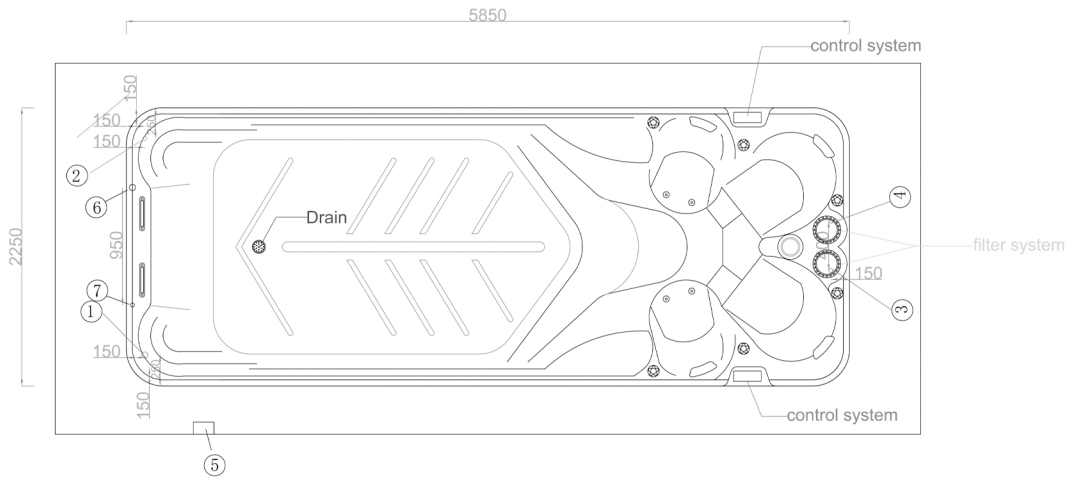

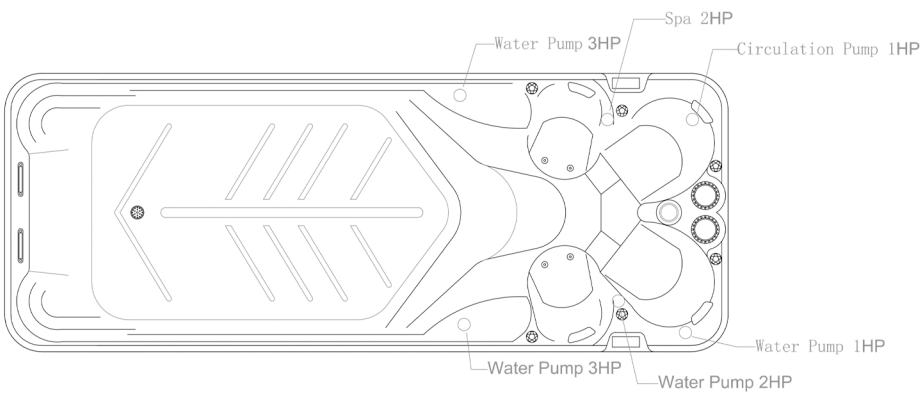

Overall Dimension: 5850x2250x1420 mm
Interior Dimension: 5430x1920x1250 mm