WovenGold
Pamper Your Senses

Tiago

Technical Diagram
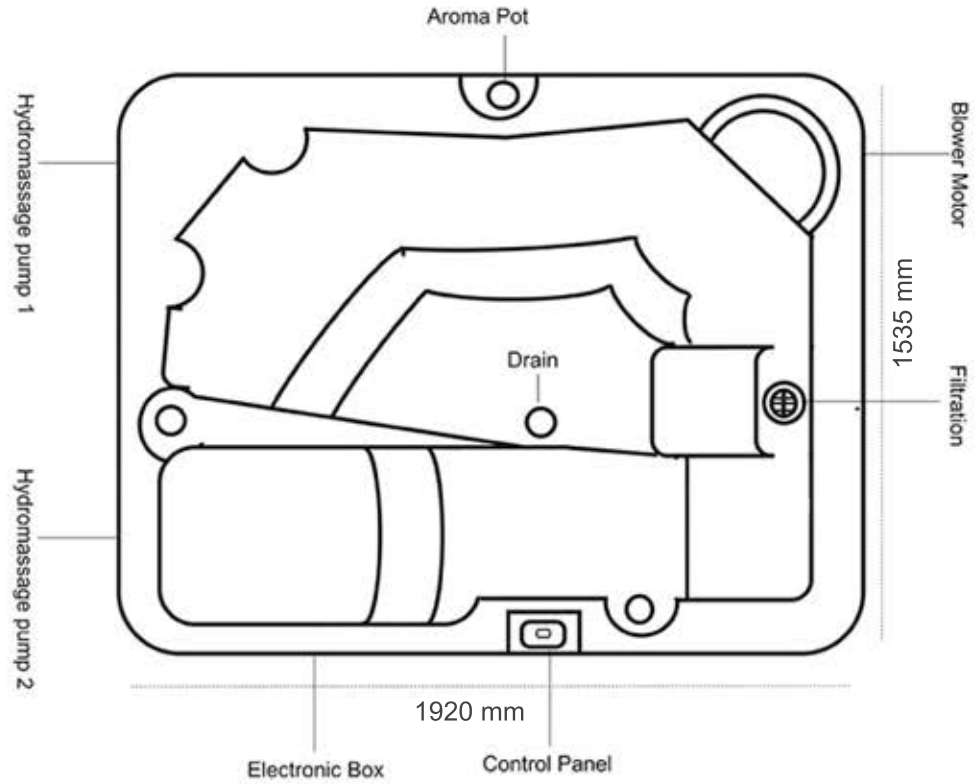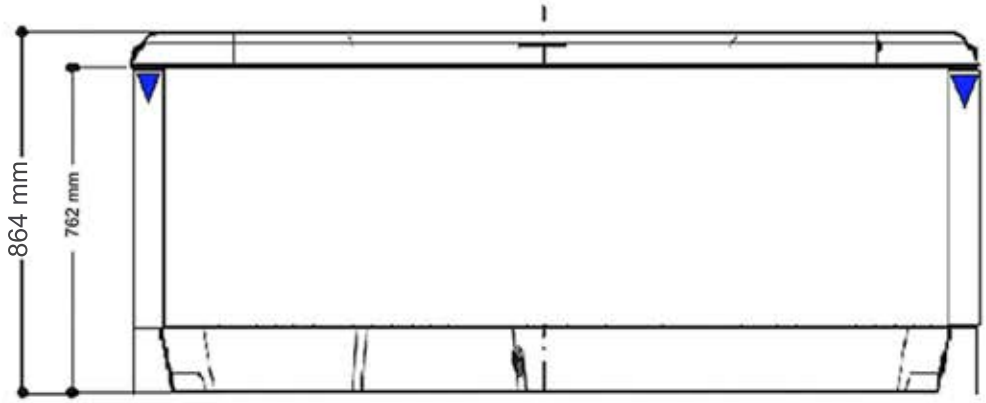
Size: 1920L X 1535W X 762D X 864MM