WovenGold
pamper your senses

Triumph
2200 L x2200 W x 960 H mm

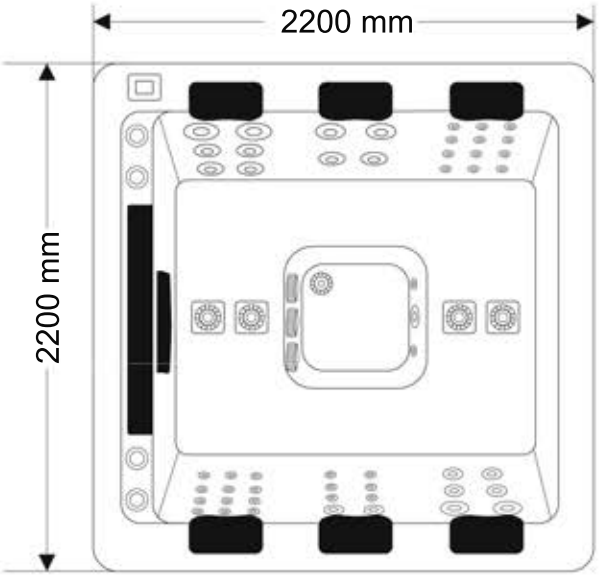

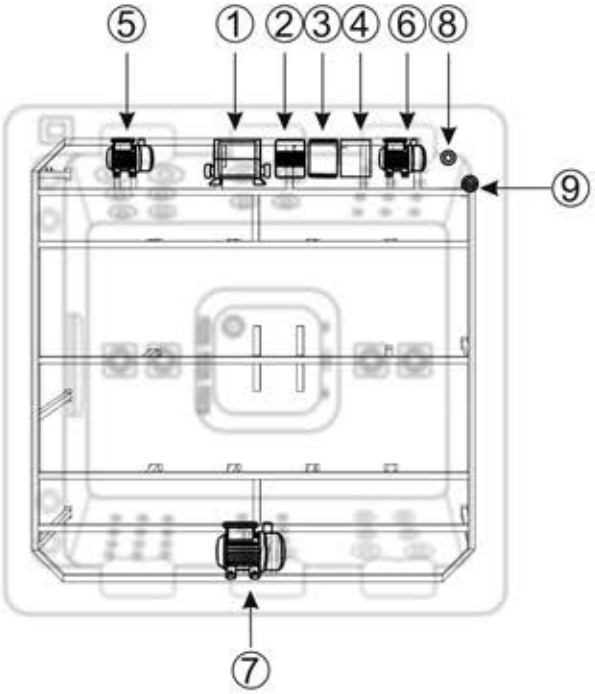

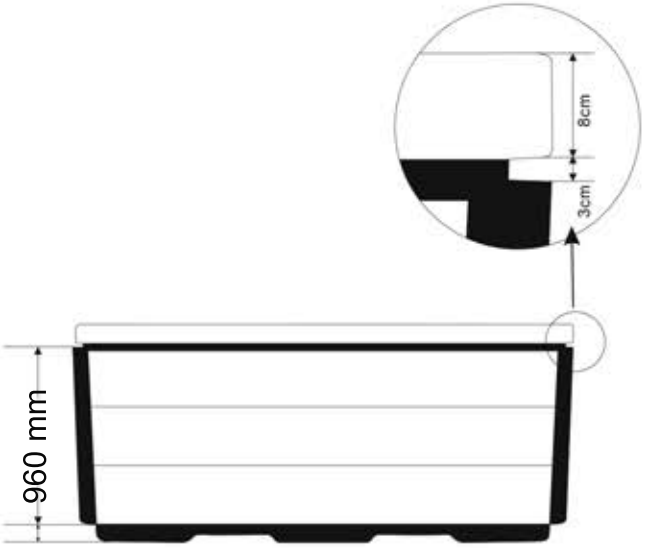

1	Balboa BP System
2	Ozoner Generator LED
3	Electronic box 1
4	Electronic box 2
5	Whirlpool Pump Ⅱ
6	Circulation Pump
7	Power Cable
8	Drain