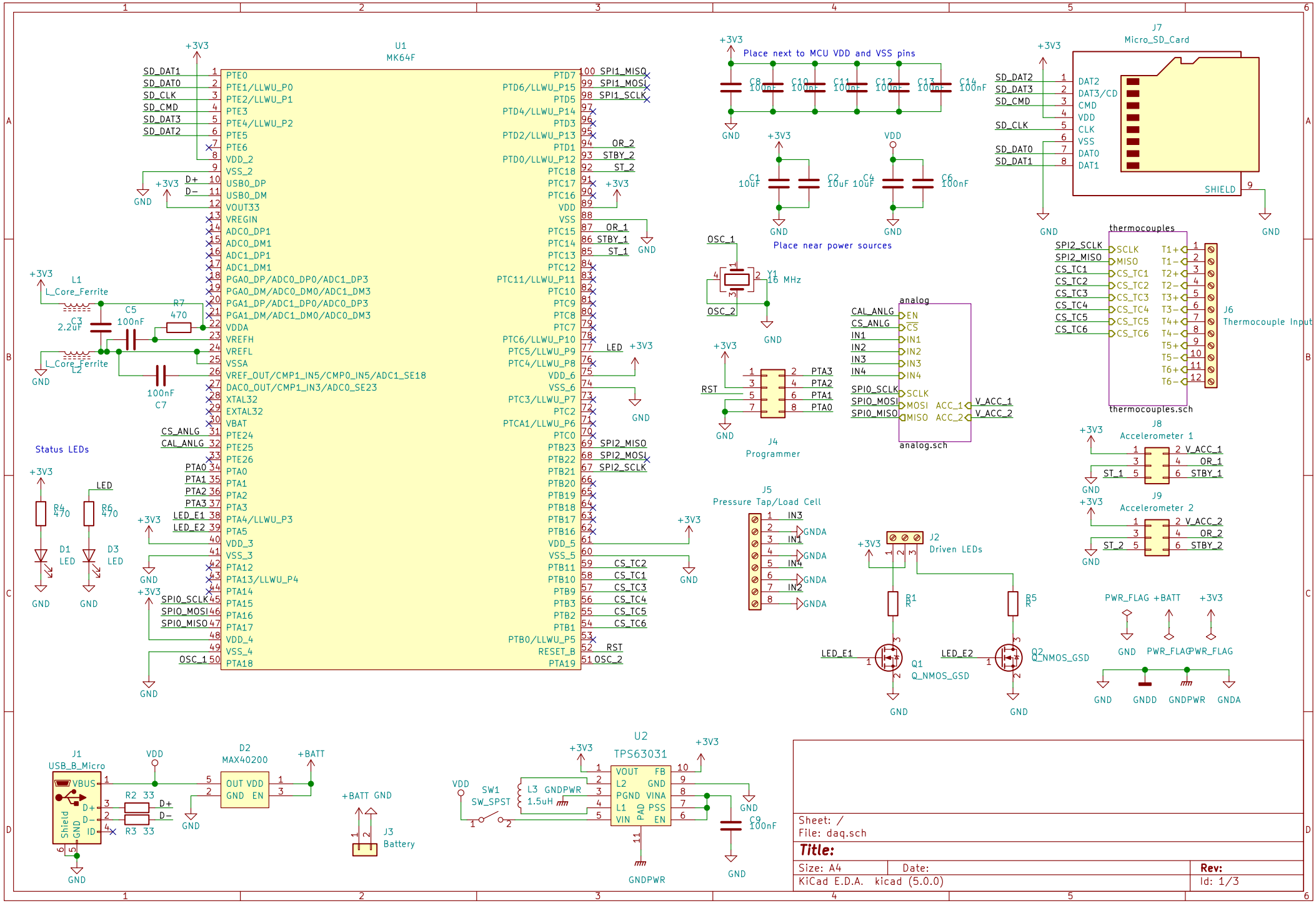
U1
MK64F
PTE0
PTE1/LLWU_P0
PTE2/LLWU_P1
PTE3
PTE4/LLWU_P2
PTE5
PTE6
VDD_2
VSS_2
USB0_DP
USB0_DM
VOUT33
VREGIN
ADC0_DP1
ADC0_DM1
ADC1_DP1
ADC1_DM1
PGA0_DP/ADC0_DP0/ADC1_DP3
PGA0_DM/ADC0_DM0/ADC1_DM3
PGA1_DP/ADC1_DP0/ADC0_DP3
PGA1_DM/ADC1_DM0/ADC0_DM3
VDDA
VREFH
VREFL
VSSA
VREF_OUT/CMP1_IN5/CMP0_IN5/ADC1_SE18
DAC0_OUT/CMP1_IN3/ADC0_SE23
XTAL32
EXTAL32
VBAT
PTE24
PTE25
PTE26
PTA0
PTA1
PTA2
PTA3
PTA4/LLWU_P3
PTA5
VDD_3
VSS_3
PTA12
PTA13/LLWU_P4
PTA14
PTA15
PTA16
PTA17
VDD_4
VSS_4
PTA18
PTD7
PTD6/LLWU_P15
PTD5
PTD4/LLWU_P14
PTD3
PTD2/LLWU_P13
PTD1
PTD0/LLWU_P12
PTC18
PTC17
PTC16
VDD
VSS
PTC15
PTC14
PTC13
PTC12
PTC11/LLWU_P11
PTC10
PTC9
PTC8
PTC7
PTC6/LLWU_P10
PTC5/LLWU_P9
PTC4/LLWU_P8
VDD_6
VSS_6
PTC3/LLWU_P7
PTC2
PTCA1/LLWU_P6
PTC0
PTB23
PTB22
PTB21
PTB20
PTB19
PTB18
PTB17
PTB16
VDD_5
VSS_5
PTB11
PTB10
PTB9
PTB3
PTB2
PTB1
PTB0/LLWU_P5
RESET_B
PTA19
SD_DAT1
SD_DAT0
SD_CLK
SD_CMD
SD_DAT3
SD_DAT2
D+
D−
CS_ANLG
CAL_ANLG
PTA0
PTA1
PTA2
PTA3
LED_E1
LED_E2
SPI0_SCLK
SPI0_MOSI
SPI0_MISO
OSC_1
SPI1_MISO
SPI1_MOSI
SPI1_SCLK
OR_2
STBY_2
ST_2
OR_1
STBY_1
ST_1
LED
SPI2_MISO
SPI2_MOSI
SPI2_SCLK
CS_TC2
CS_TC1
CS_TC3
CS_TC4
CS_TC5
CS_TC6
RST
OSC_2
+3V3
GND
Place next to MCU VDD and VSS pins
C8 100nF
C10 100nF
C11 100nF
C12 100nF
C13 100nF
C14 100nF
C1 10uF
C2 10uF
C4 10uF
C6 100nF
VDD
Place near power sources
J7
Micro_SD_Card
DAT2
DAT3/CD
CMD
VDD
CLK
VSS
DAT0
DAT1
SHIELD
L1
L_Core_Ferrite
L2
C3 2.2uF
C5 100nF
R7 470
C7 100nF
Y1 16 MHz
J4
Programmer
analog
EN
CS
IN1
IN2
IN3
IN4
SCLK
MOSI
MISO
ACC_1
ACC_2
V_ACC_1
V_ACC_2
analog.sch
thermocouples
T1+
T1−
T2+
T2−
T3+
T3−
T4+
T4−
T5+
T5−
T6+
T6−
J6
Thermocouple Input
thermocouples.sch
J8
Accelerometer 1
J9
Accelerometer 2
Status LEDs
R4 470
R6 470
D1 LED
D3 LED
J5
Pressure Tap/Load Cell
GNDA
J2
Driven LEDs
R1 R
R5 R
Q1 Q_NMOS_GSD
Q2 Q_NMOS_GSD
PWR_FLAG
+BATT
GNDD
GNDPWR
J1
USB_B_Micro
VBUS
Shield
R2 33
R3 33
D2
MAX40200
OUT VDD
GND EN
J3
Battery
U2
TPS63031
VOUT
L2
PGND
L1
VIN
FB
GND
VINA
PSS
EN
PAD
SW1
SW_SPST
L3 1.5uH
C9 100nF
Sheet: /
File: daq.sch
Title:
Size: A4
Date:
Rev:
KiCad E.D.A. kicad (5.0.0)
Id: 1/3

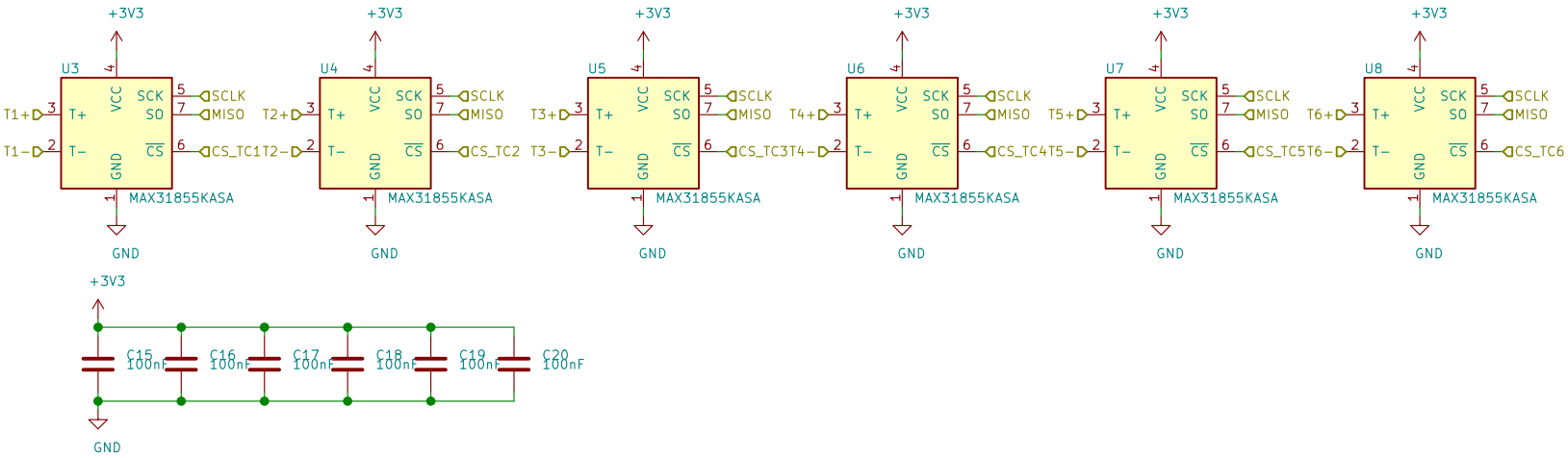

Sheet: /thermocouples/
File: thermocouples.sch

Title:

Size: A4	Date:	**Rev:**
KiCad E.D.A. kicad (5.0.0)		Id: 2/3

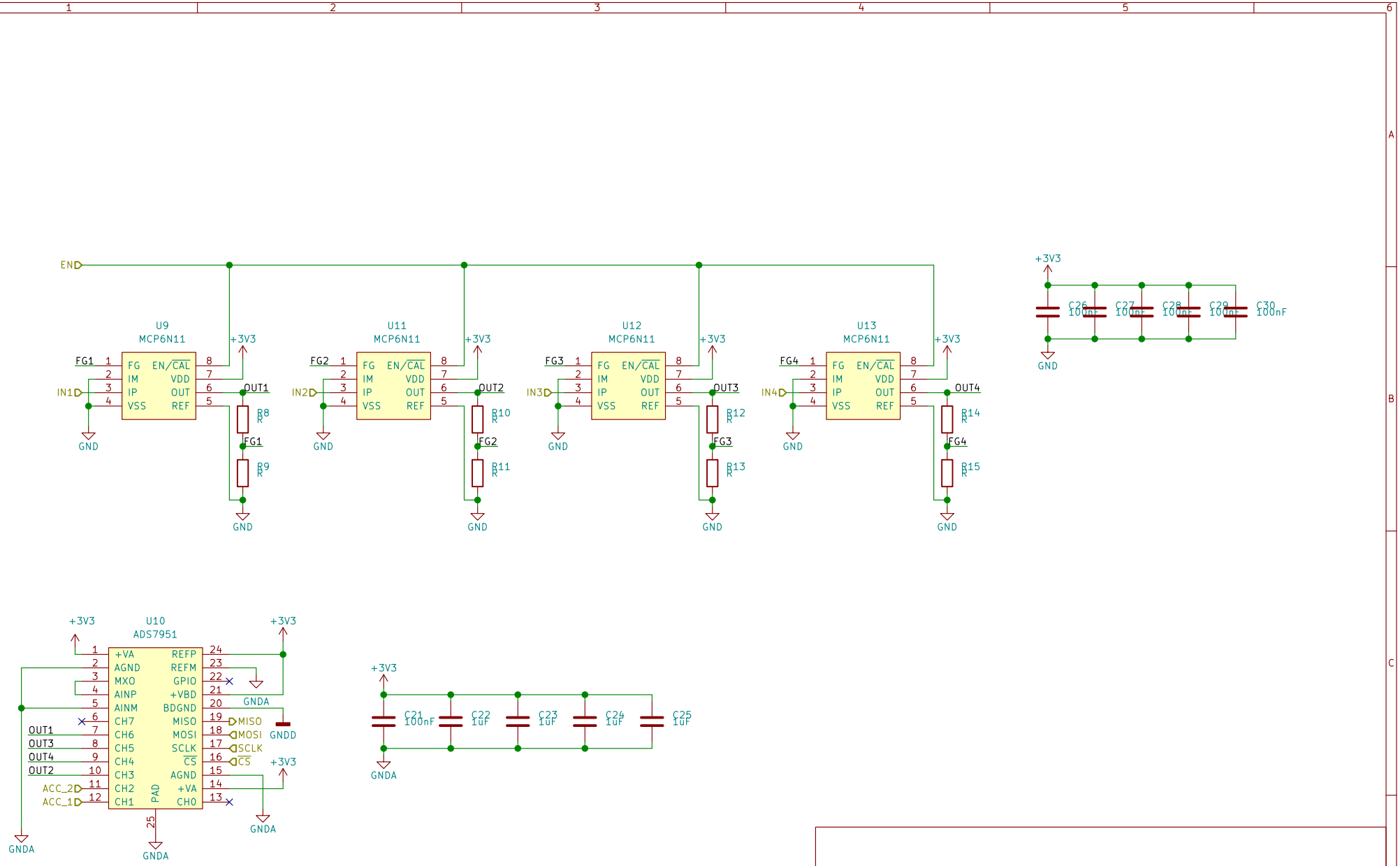

Sheet: /analog/
File: analog.sch

Title:

Size: A4	Date:	Rev:
KiCad E.D.A. kicad (5.0.0)		Id: 3/3