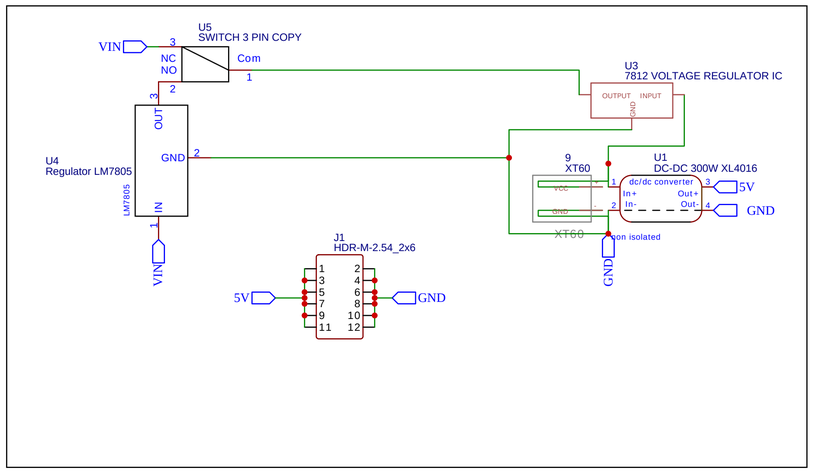
U5
SWITCH 3 PIN COPY
VIN
NC
NO
Com
U3
7812 VOLTAGE REGULATOR IC
OUTPUT
INPUT
GND
U4
Regulator LM7805
LM7805
OUT
GND
IN
VIN
9
XT60
U1
DC-DC 300W XL4016
dc/dc converter
In+
In-
Out+
Out-
5V
GND
non isolated
J1
HDR-M-2.54_2x6
5V
GND

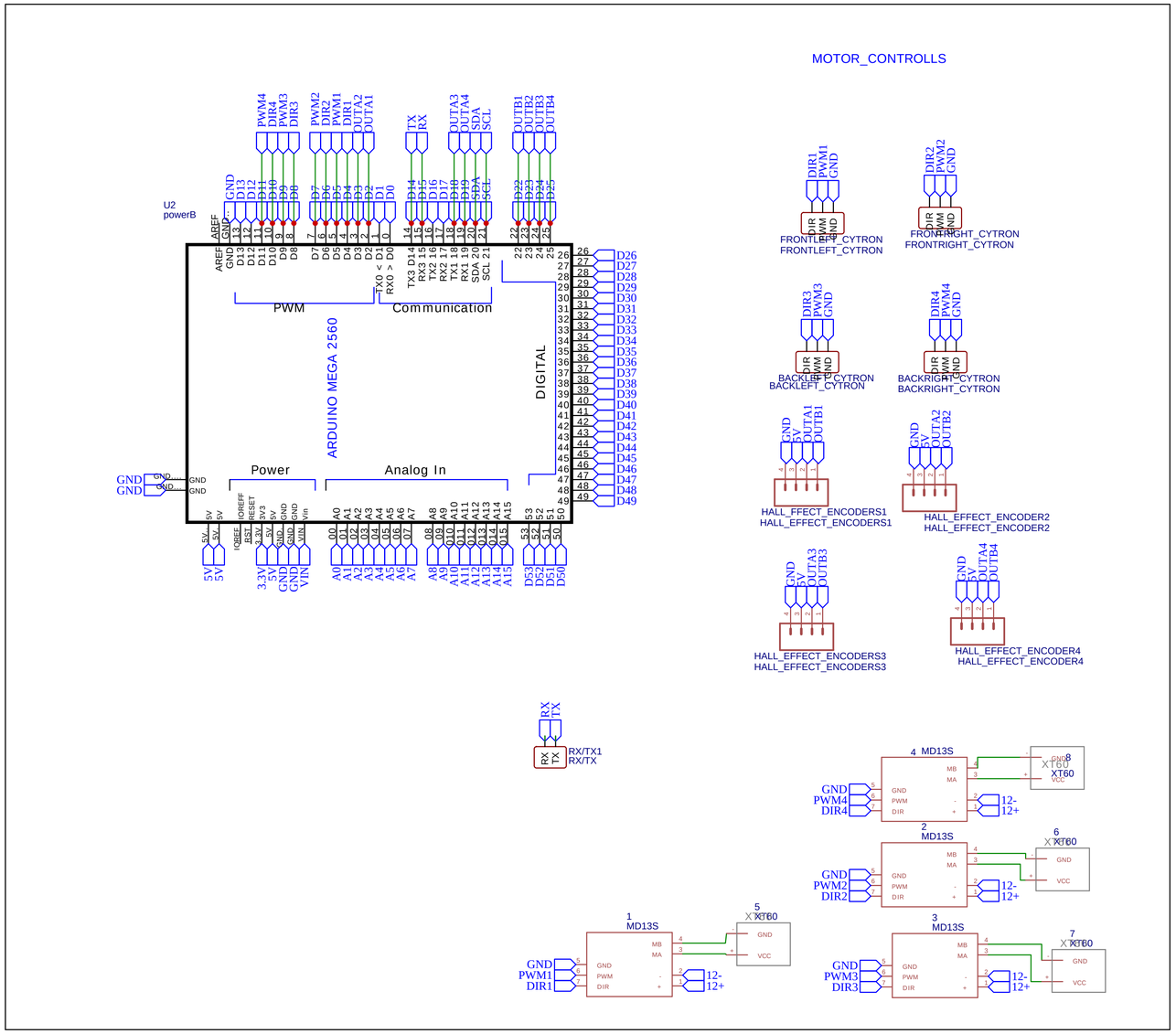
MOTOR_CONTROLLS
ODOMETRY
ODOMETERY_NANO
ODOMETRY_NANO
ICSP
ND1/TX
ND0/RX
RST
GND
ND2
ND3
ND4
ND5
ND6
ND7
ND8
ND9
ND10
D11/MOSI
D12/MISO
VIN
GND
RST
5V
NA7
NA6
NA5/SCL
NA4/SDA
NA3
NA2
NA1
NA0
AREF
3V
ND13/SCK
ENCODER_X
ENCODER_Y
RX/TX
SDA/SCL
MPU6050
U2
powerB
ARDUINO MEGA 2560
PWM
Communication
DIGITAL
Power
Analog In
FRONTLEFT_CYTRON
FRONTRIGHT_CYTRON
BACKLEFT_CYTRON
BACKRIGHT_CYTRON
HALL_FFECT_ENCODERS1
HALL_EFFECT_ENCODER2
HALL_EFFECT_ENCODERS3
HALL_EFFECT_ENCODER4
RX/TX1
MD13S
XT60
12-
12+

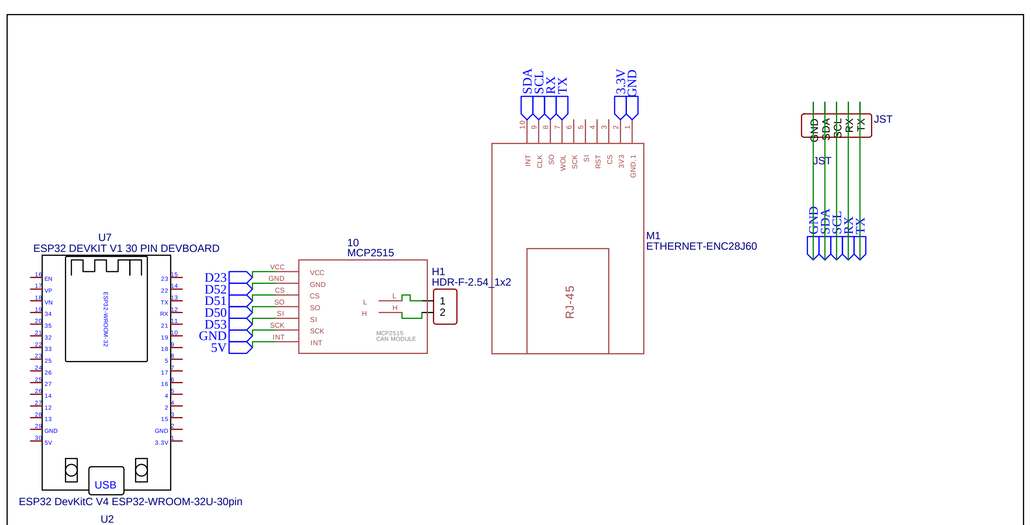
U7
ESP32 DEVKIT V1 30 PIN DEVBOARD
USB
ESP32 DevKitC V4 ESP32-WROOM-32U-30pin
U2
10
MCP2515
H1
HDR-F-2.54_1x2
M1
ETHERNET-ENC28J60
RJ-45
JST
SDA
SCL
RX
TX
3.3V
GND
D23
D52
D51
D50
D53
5V