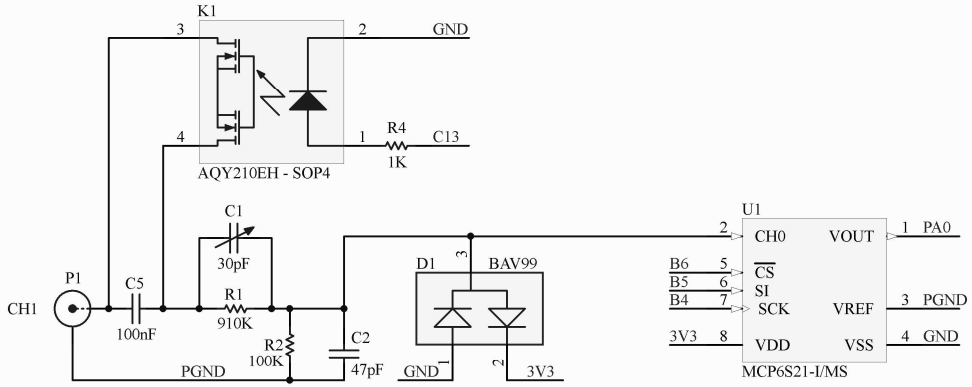

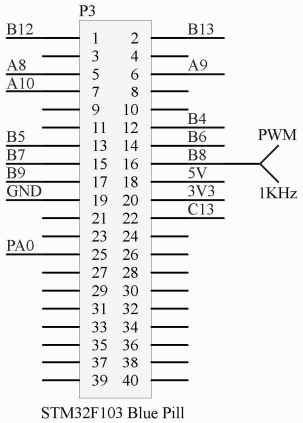

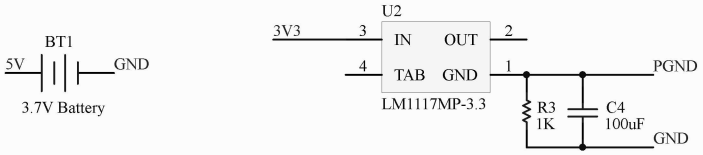

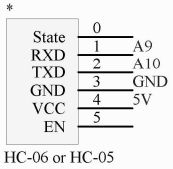

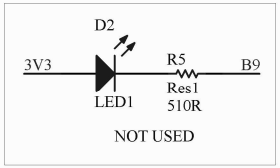

- HC-05 BLT module is faster than HC-06 and can give around 20FPS of refresh speed.
- C4 can be 47-100uF low voltage (eg 6.3V) to match the 0805 dimension. No need to be polarized.

Title: HS101-PRO BluePill BLT		
Size: A4	Number:	Revision: 1.1
Date: 6/18/2020	Sheet of	
File: C:\Users\...\101PRO_BLUEPILL_BTL.SchDoc	Drawn By:	