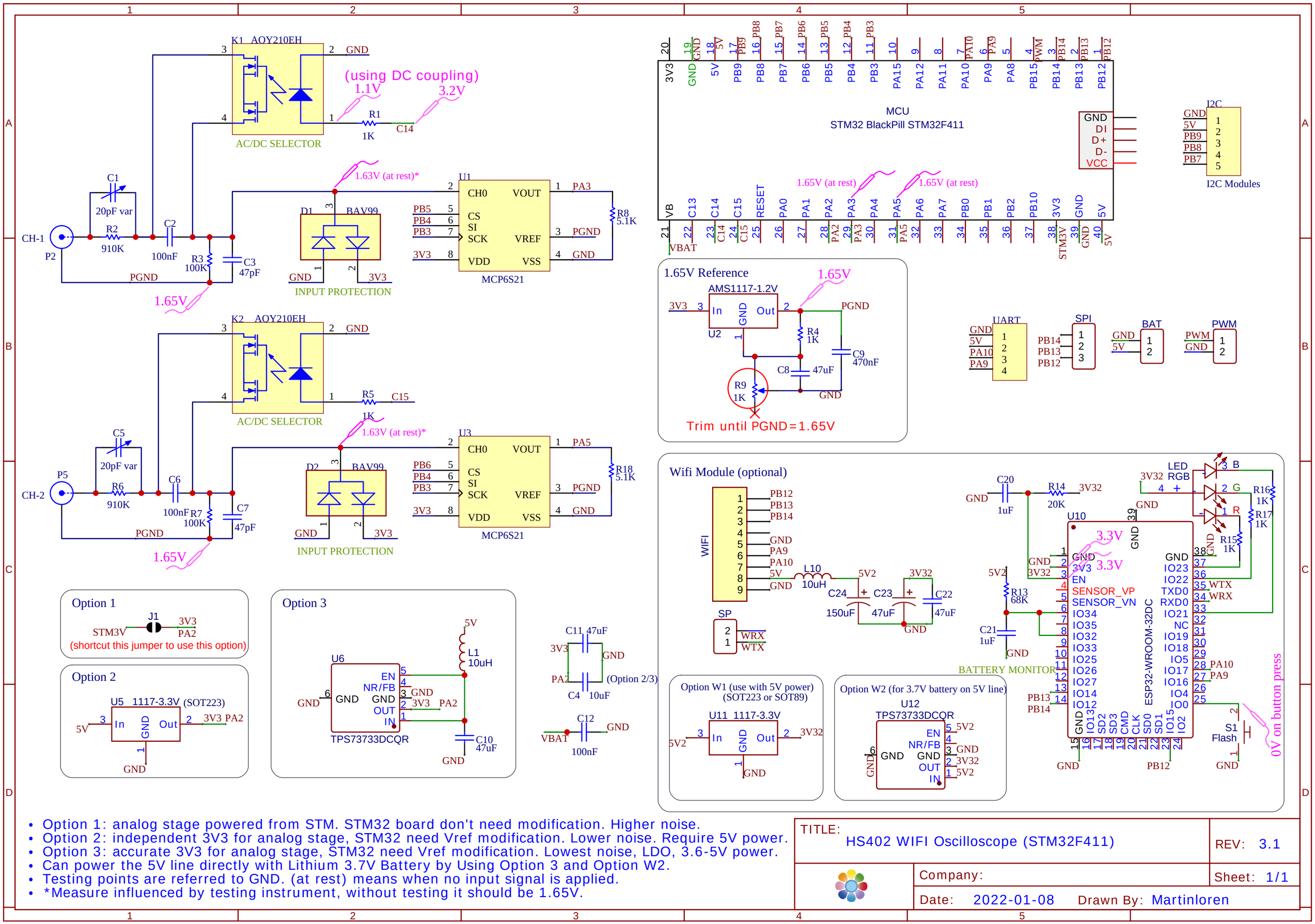

- Option 1: analog stage powered from STM. STM32 board don't need modification. Higher noise.
- Option 2: independent 3V3 for analog stage, STM32 need Vref modification. Lower noise. Require 5V power.
- Option 3: accurate 3V3 for analog stage, STM32 need Vref modification. Lowest noise, LDO, 3.6-5V power.
- Can power the 5V line directly with Lithium 3.7V Battery by Using Option 3 and Option W2.
- Testing points are referred to GND. (at rest) means when no input signal is applied.
- *Measure influenced by testing instrument, without testing it should be 1.65V.
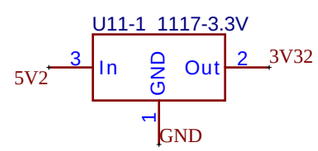
TITLE: HS402 WIFI Oscilloscope (STM32F411)	REV: 3.1
Company:	Sheet: 1/1
Date: 2022-01-08 Drawn By: Martinloren