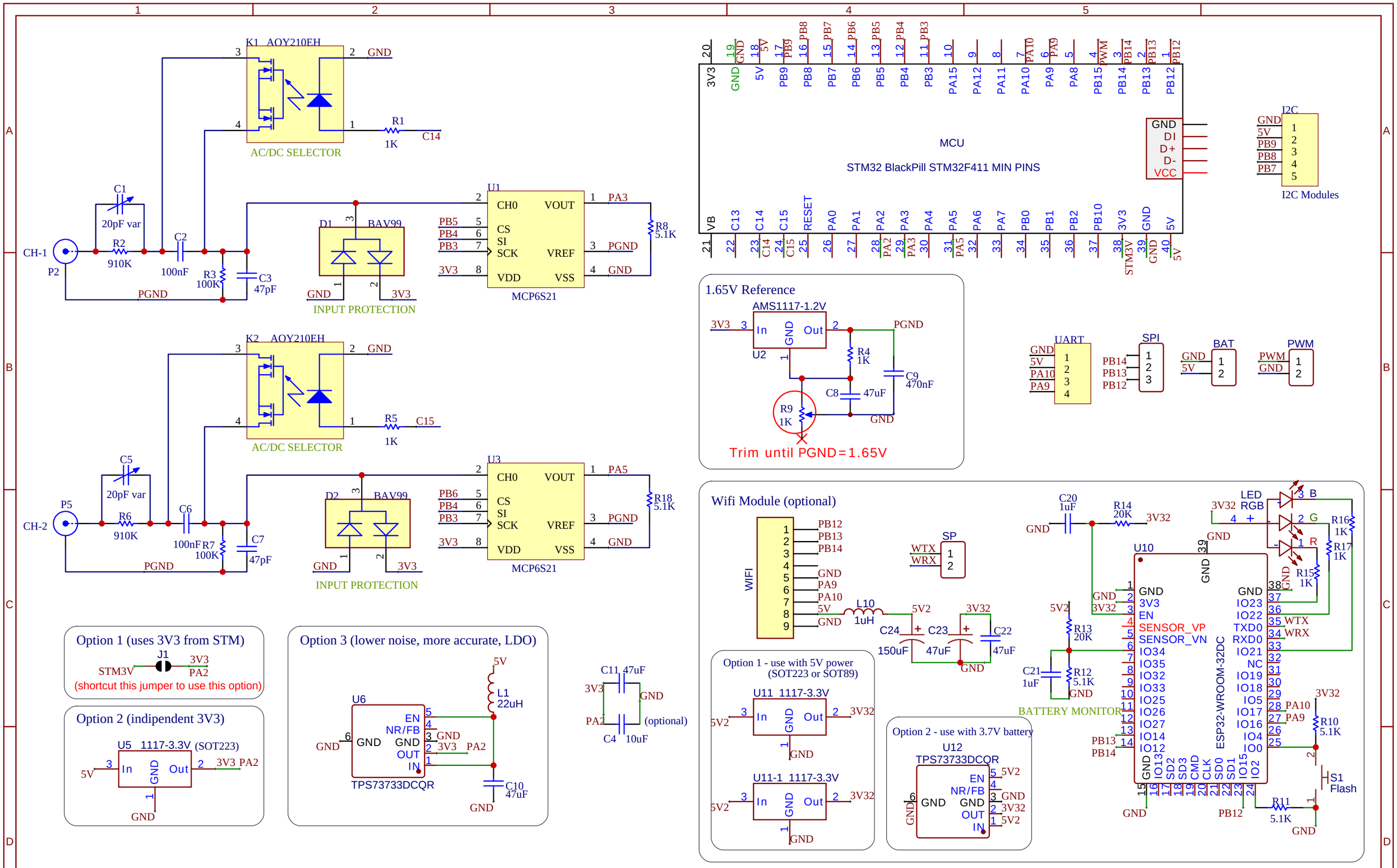

- C8 can be 47-100uF low voltage (eg 6.3V) to match the 0805 dimension. No need to be polarized.
- C2,C6 may be 1uF to increase bandwidth at lower frequencies (<100Hz).
- All resistors 1% tolerance. Capacitors/Resistors are size 0805.
- Testing points are referred to GND.
- (at rest) means when no input signal is applied.
- *Measure influenced by testing instrument, without testing it should be 1.65V.

TITLE: HS402 WIFI Oscilloscope (STM32F411)	REV: 3.0
Company:	Sheet: 1/1
Date: 2021-03-15 Drawn By: Martinloren	