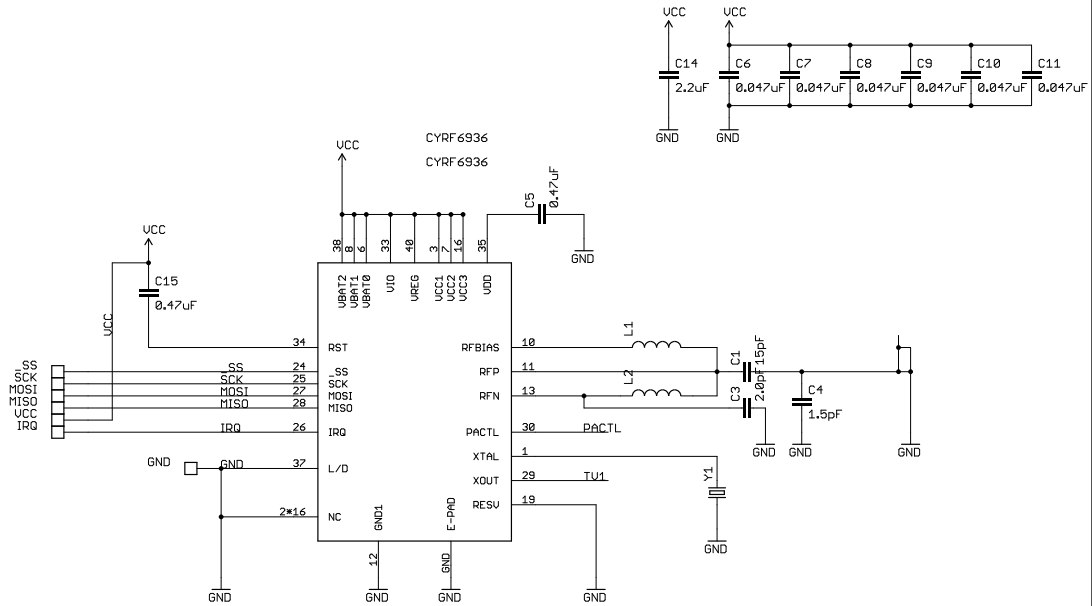

TITLE: tinyRF

Document Number:

REV:

Date: 4/19/13 1:58 PM

Sheet: 1/1