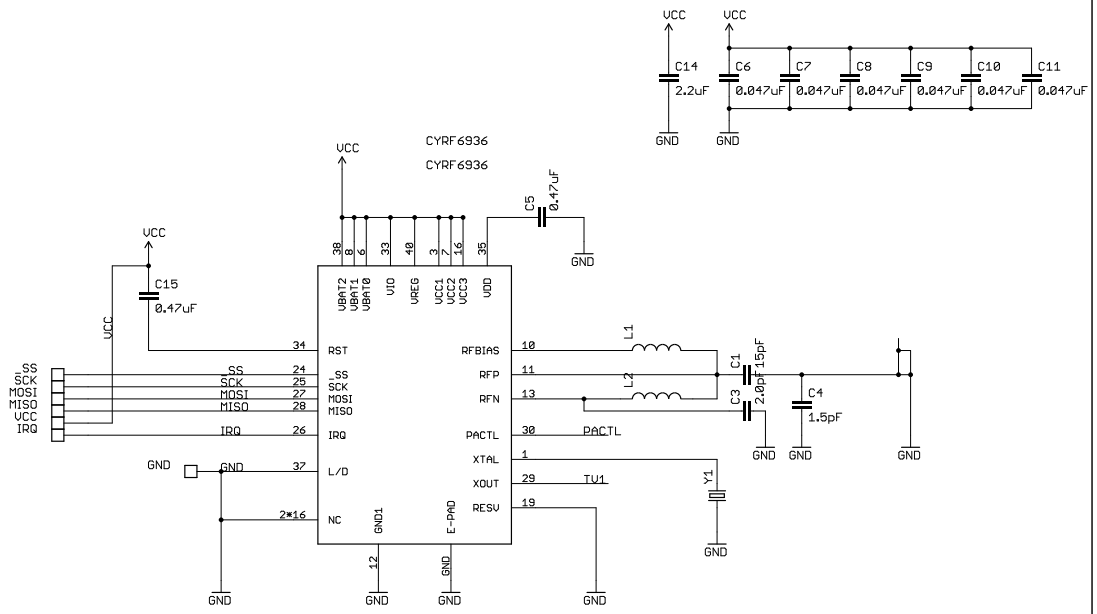

TITLE: cyrf6936-bob	
Document Number:	REV:
Date: 4/18/13 9:46 AM	Sheet: 1/1