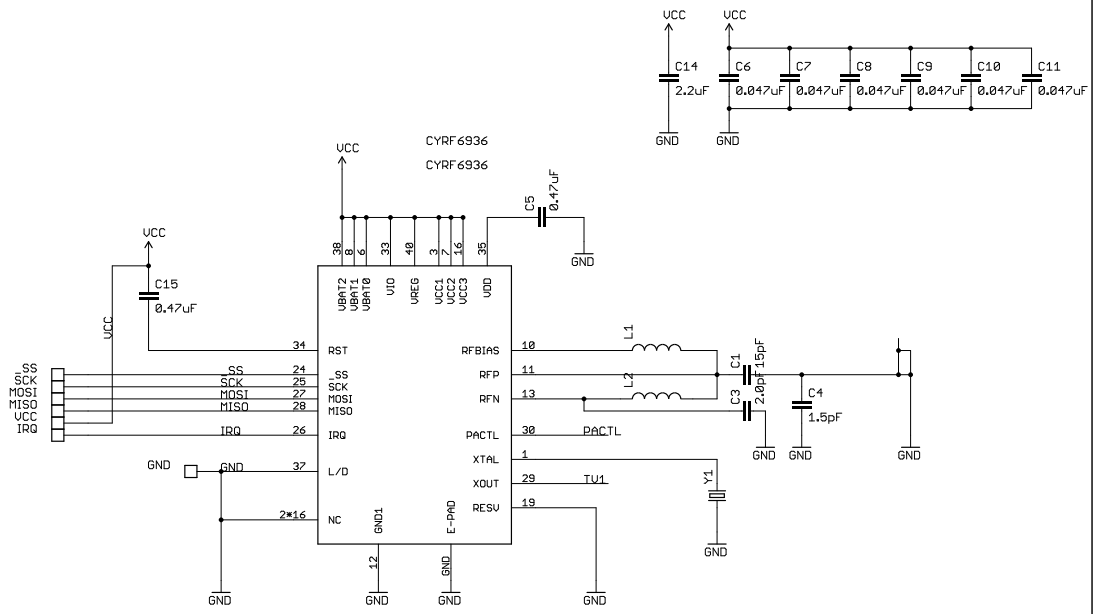

TITLE: cyrf69103-bob	
Document Number:	REV:
Date: 4/19/13 12:17 PM	Sheet: 1/1