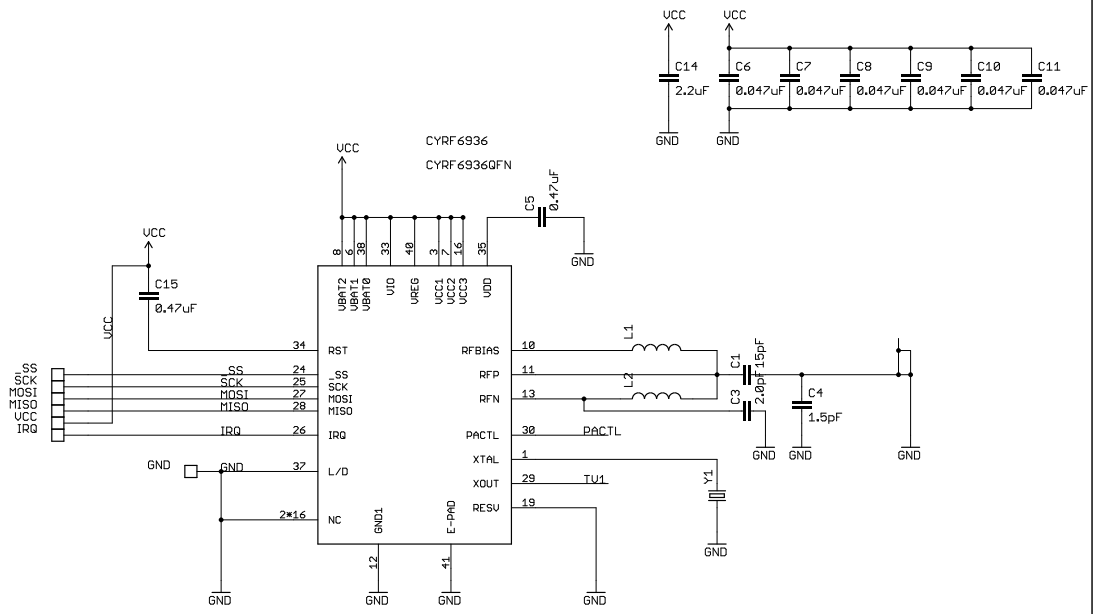

TITLE: cyrf6936-bob	
Document Number:	REV:
Date: 5/15/13 2:06 AM	Sheet: 1/1