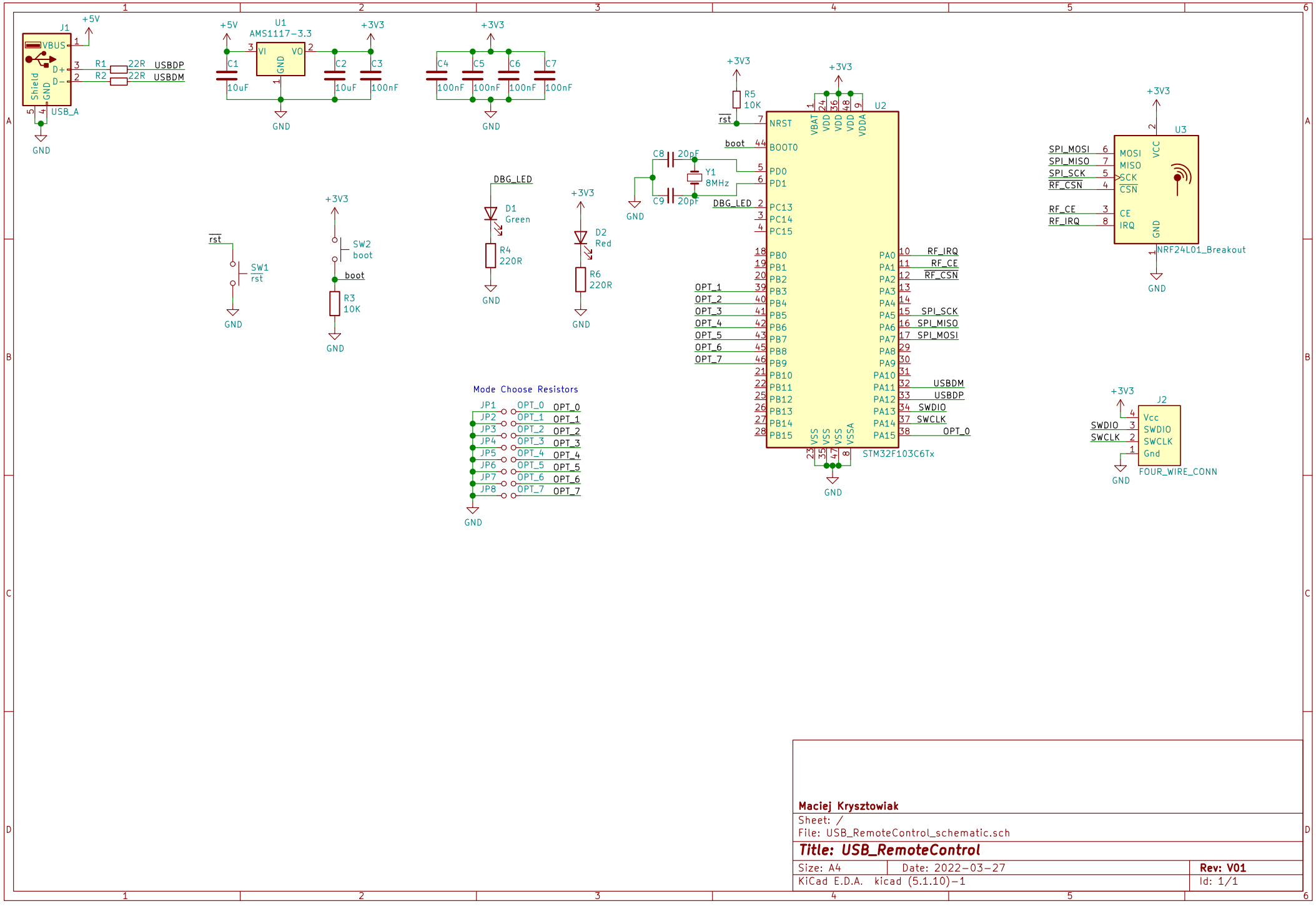


**Maciej Krysztowiak**

Sheet: /

File: USB_RemoteControl_schematic.sch

**Title: USB_RemoteControl**

| | | |
|---|---|---|
| Size: A4 | Date: 2022-03-27 | **Rev: V01** |
| KiCad E.D.A. kicad (5.1.10)-1 | | Id: 1/1 |