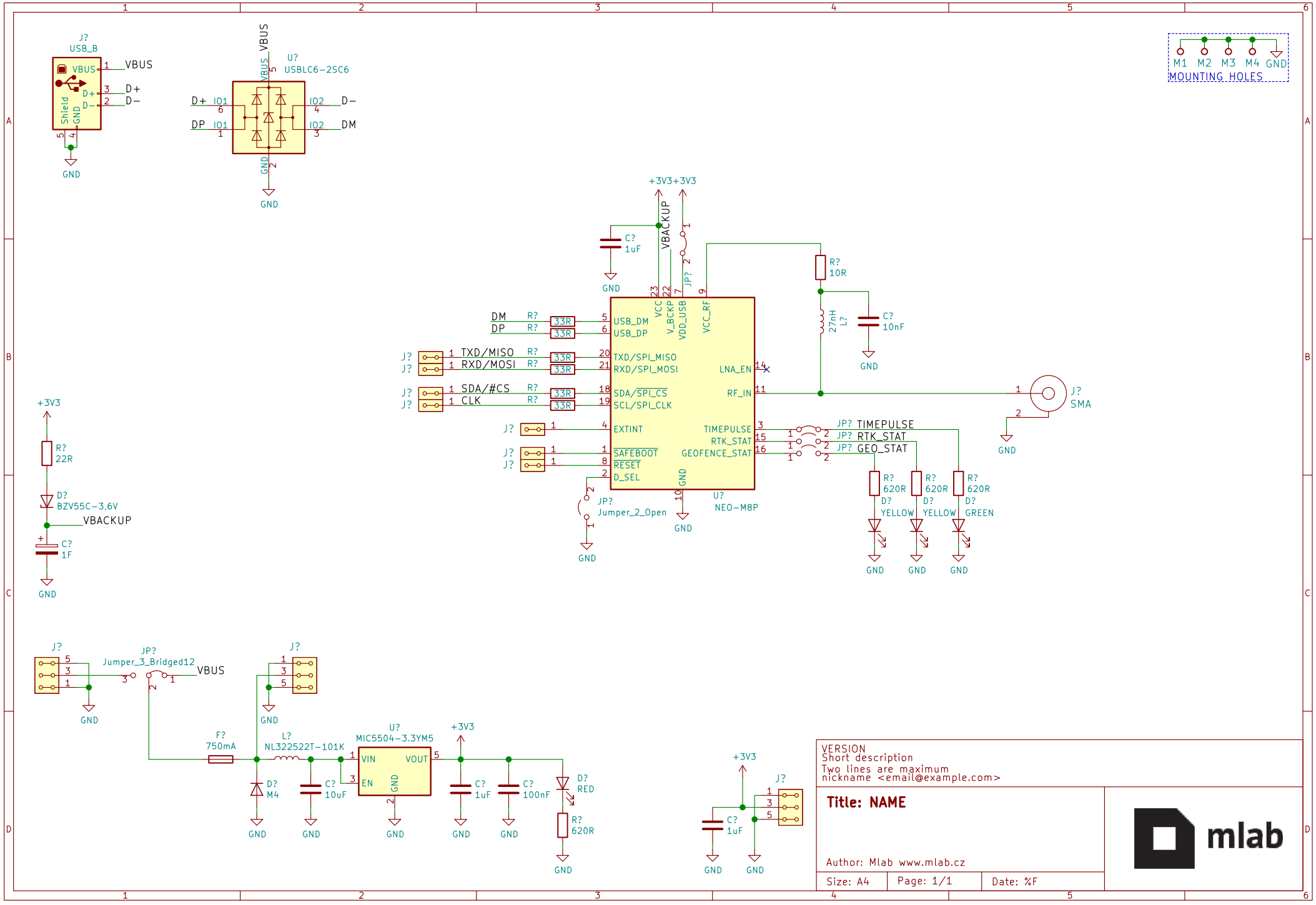

VERSION
Short description
Two lines are maximum
nickname <email@example.com>

Title: NAME

Author: Mlab www.mlab.cz

Size: A4 | Page: 1/1 | Date: %F

mlab