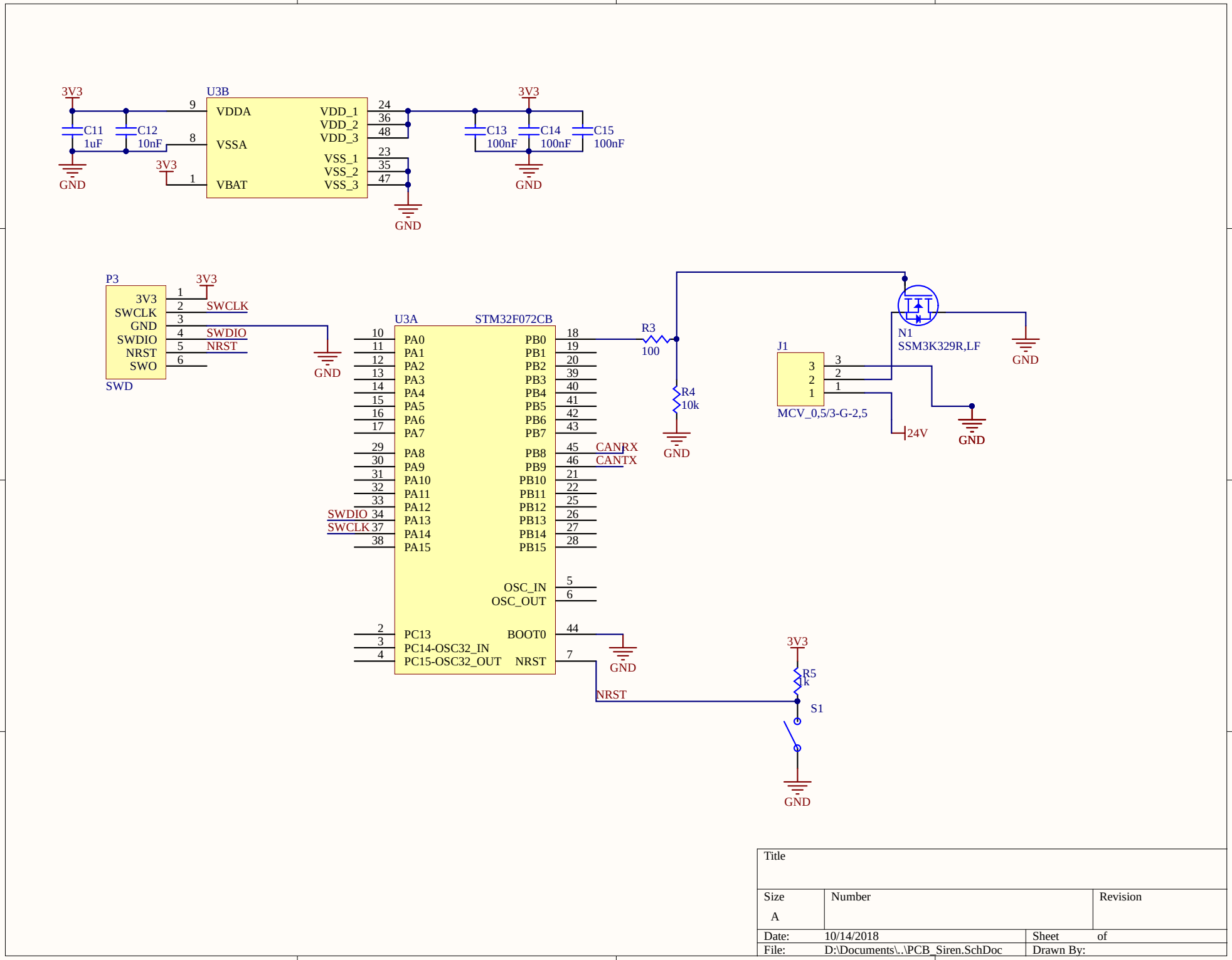

Title		
Size A	Number	Revision
Date: 10/14/2018	Sheet of	
File: D:\Documents\..\PCB_Siren.SchDoc	Drawn By:	