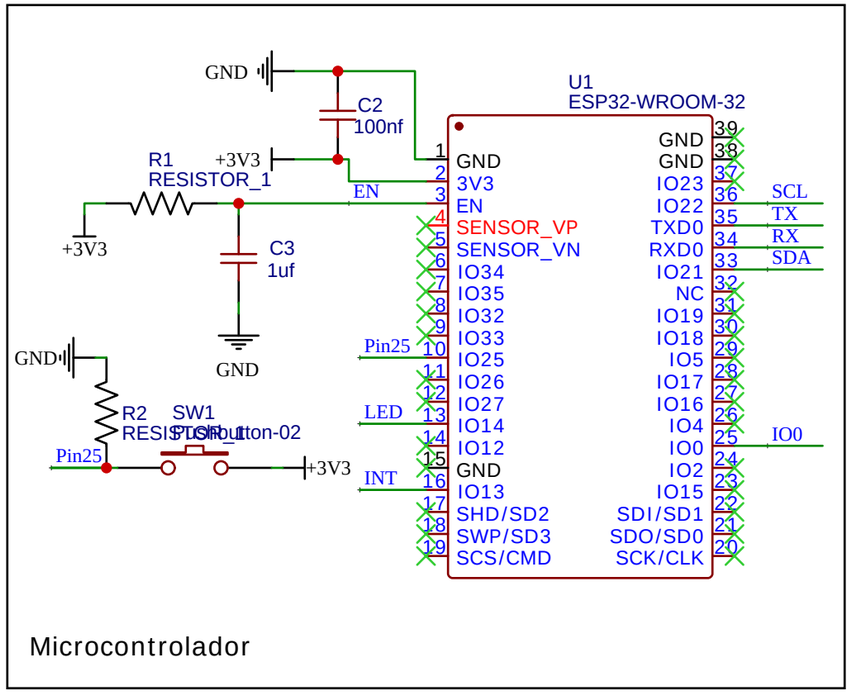

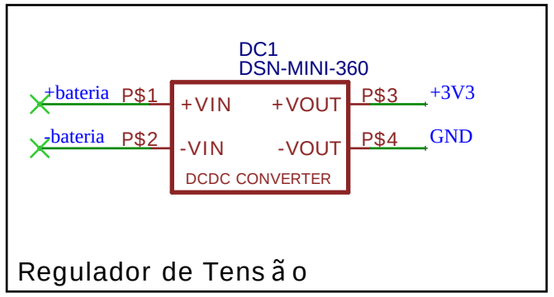

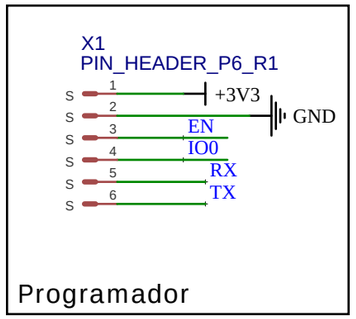

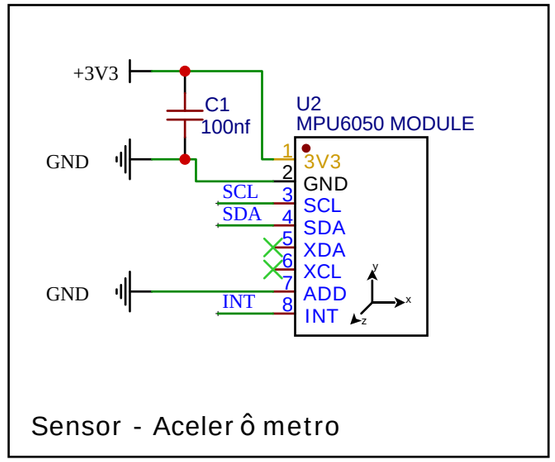

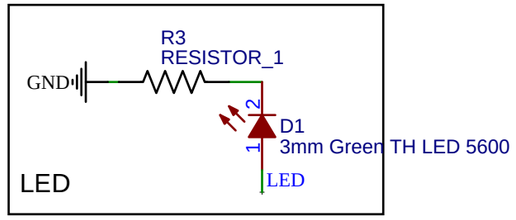

TITLE: Projeto PCB TCC		REV: 1.0
EasyEDA	Company: IFG Goiania	Sheet: 1/1
	Date: 2022-05-01 Drawn By: M ú ria Viana	