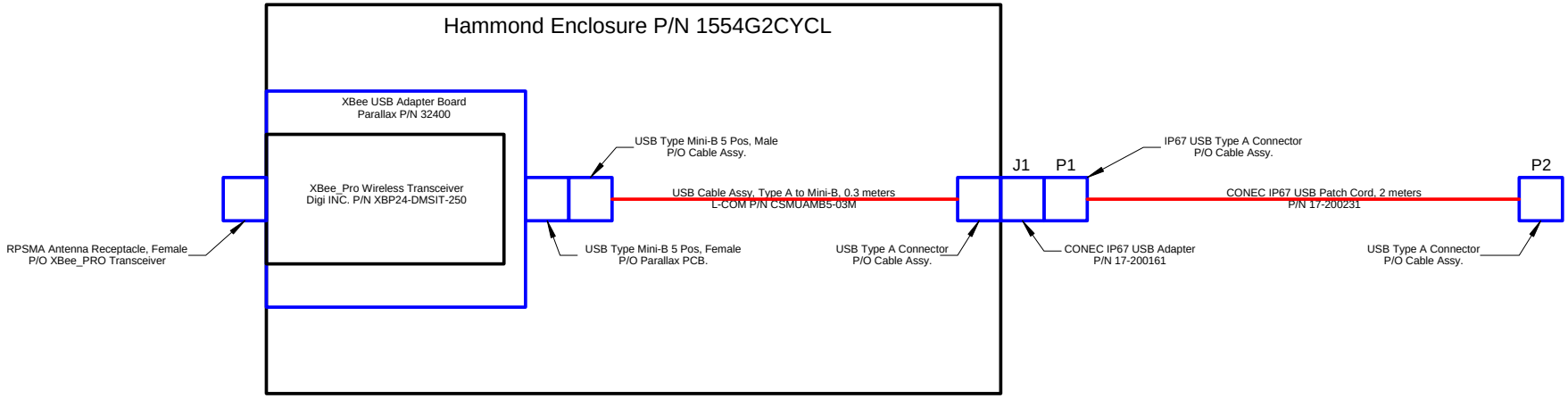

File: BaseStation_BlockDiag.tcw

NOAA/NMFS, Northeast Fisheries Science Center
166 Water Street
Woods Hole, MA 02543

TITLE
EchoCAL Wireless Calibration System
XBee-PRO Base Station Wiring Diagram

SIZE	CAGE CODE	DWG NO	REV
A3		ECHOCAL-10200	-
SCALE N/A		SHEET 1 of 1	