普通公差

尺寸 \ 等級	A	B	C
L<=3	±0.02	±0.03	±0.05
3<L<=6	±0.05	±0.05	±0.08
6<L<=16	±0.07	±0.08	±0.10
16<L<=30	±0.10	±0.10	±0.12
30<L<=120	±0.10	±0.15	±0.18
120<L<=300	±0.15	±0.20	±0.25
300<L<=500	±0.20	±0.30	±0.40
角度	±1°		

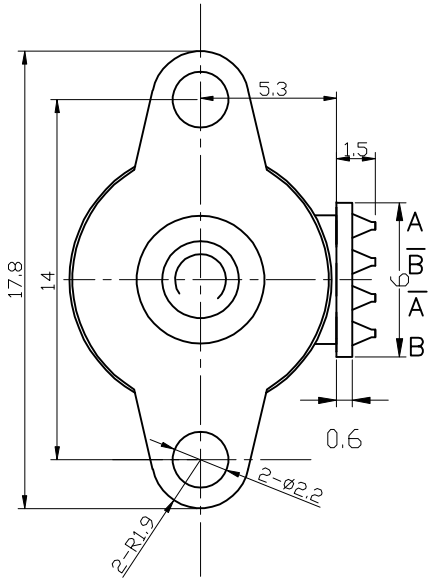

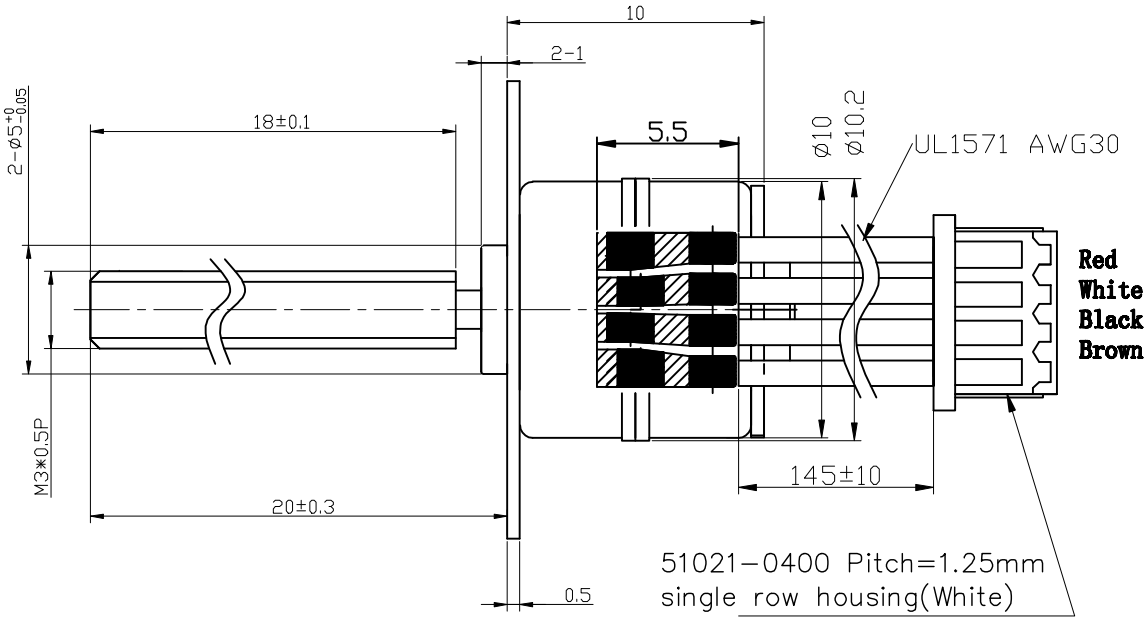

CONNECTION DIAGRAM

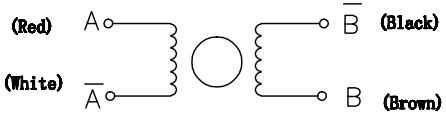

SEQUENCE OF EXCITATION

CONNECTOR PIN LOCATION						
PIN NO	COLOR	CCW ← (SEEN FROM FLANGE SIDE)			CW →	PHASE
1	Red	ON			ON	A
2	White		ON	ON		Ā
3	Black			ON	ON	B̄
4	Brown	ON	ON			B

2-2相/mutually

ELECTRICAL CHARACTERISTIC

1	RATED VOLTAGE	12 V DC (Driver IC : L6219)
2	CURRENT PER PHASE	100mA/PHASE
3	COIL RESISTANCE	20±7% ohm/PHASE
4	NO. OF PHASES	2 PHASES
5	STEP ANGLE	18 °/STEP
6	EXCITATION METHOD	2 PHASE EXCITATION
7	DRIVE MODE	BIPOLAR DRIVE
8	PULL-IN TORQUE	MORE THAN 6 gf-cm AT 500 pps
9	PULL-OUT TORQUE	MORE THAN 7 gf-cm AT 500 pps
10	MAX RESPONSE FREQUENCY	MORE THAN1500 pps
11	MAX STARTING FREQUENCY	MORE THAN 1100 pps
12	INSULATION CLASS	CLASS E FOR COILS
13	INSULATION STRENGTH	100 V AC FOR ONE SECOND
14	INSULATION RESISTANCE	50MΩ DC 500 V
15	OPERATING TEMPERATURE RANGE	-0 ~ +55 °C

版本	版次	更改处数	更改内容	签名	日期
A					

微轉科技有限公司

制图		审核		材质	重量	比例	第三视角投影	产品科号	PM10HM10LNxxx
设计		批准				5:1		产品名称	步进马达