Graphite Flex Sensor

Extra Long Special Edition C5462310

General features

- Can be used for compression and extension
- Low power and material consumption
- Bluetooth connectivity with an Arduino shield
- Easily reparable and low cost
- Easy to use
- Ultra light

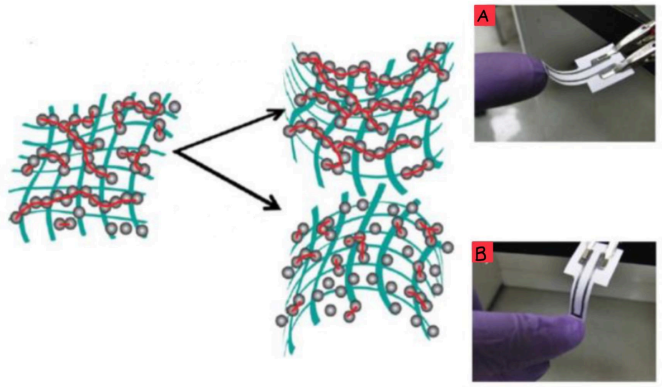

Figure 1: Demonstration for compression and extension of the graphite sensor and the graphite nano-particles.

1 - Description

The graphite flex sensor is made by tracing with a standard graphite pencil on a piece of cellulose paper. Because of the conductivity of the graphite a resistance can be measured between two points on the drawn shape.The graphite nanoparticles create a granular network for which the resistance is proportional to the exponential of the distance between the particles, L.

$$R \sim e^{\beta L}$$

By bending the paper, the distance between the particles is expanded or compressed, changing the resistance. This means that the resistance of the sensor changes with the density of nanoparticles on the paper. The density of nanoparticles on the paper depends on the hardness of the pencil used. Therefore, three types of graphite, HB, 3B and 6B, have been tested and the sensor has been characterized for each of these three types.

By drawing a U-shape on the paper, one creates a low-tech sensor that can be used to measure the deformation of the paper in an upwards or downwards direction. When bending the paper upwards (*Figure 1A*), this compresses the graphite particles on the paper, decreasing the resistance. Inversely, when bending the paper downward (*Figure 1B*) the distance between the graphite particles increases together with the resistance.

2 - Specifications

Type	**Graphite Sensor**
Sensor Type	Passive
Measurand	Resistance
Output signal	Analog
Materials	Paper Graphite (6B, 3B, HB)
Typical response time	>100ms

3 - Dimensional Diagram

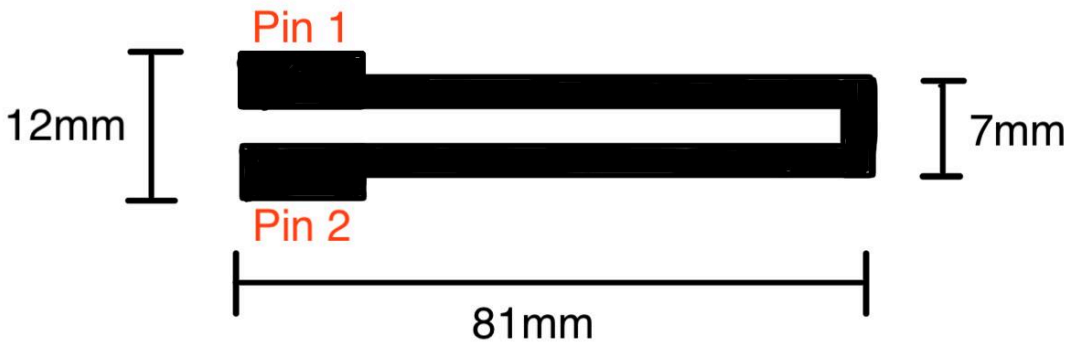

Figure 2: Schematic of the general dimensions of the graphite sensor

Pin NO.	**Specification**
1	Vcc
2	Vout

Figure 2 shows a schematic of the general dimensions of the graphite sensors. Because the sensors are drawn by hand these dimensions may vary slightly between and depend highly on the precision of the person creating the sensor.

4 - Characteristics

	Min	Typ	Max	Unit
Sensor Voltage	0	-	5	V
6B	8	10	12	MΩ
3B	55	60	65	MΩ
HB	60	70	80	MΩ

5 - Standard Use Conditions

	Value	Unit
Ambiant Temperature	20±5	°C
Humidity	50±10	%
Bluetooth Range	4±1	m

6 - Sensor Sensitivity

Based on the different graphite hardnesses used, the resistance of the sensor changes. For each graphite hardness this was used to calculate the sensitivity of the sensor in relation to its deformation, e. The sensitivity was calculated using the following formula:

$$S = \frac{\Delta R}{\Delta e} \quad \textit{with} \quad \Delta R = \frac{(R_C - R_0)}{R_0}$$

For a detailed explanation of how the deformation was calculated, see section 8 on *Deformation Characterization*. A sensor with each of the three types of graphite were tested and their sensitivity was calculated giving the following results:

Graphite Type	Extension Sensitivity	Compression Sensitivity
6B	1,666	2,851
3B	3,819	8,588
HB	7,657	10,983

7 - Basic Circuit Integration

Figure 3 shows an example of a basic circuit integration of the sensor. The sensor is used with a transimpedance operational amplifier circuit in order to be able to measure the signal and convert it to an output voltage V_ADC.
At the exit of the operational amplifier there is a low pass filter. This filter facilitates the filtration of noise for a clearer signal, however it should be taken into consideration that it also influences the response time of the circuit. The circuit shown in *Figure 3* was simulated using three different values for C_4 (0.1uF, 1uF, 10uF) in order to choose the values best suited. In the end, the value of C_4 was set to 1uF because this filtered the noise well enough, while also giving a decent response time.
For later regulation of the circuit, R2 has been replaced by a digital potentiometer. This allows for the user to program the resistance value in order to change the gain of the circuit and for more precise calibration of the measurement.

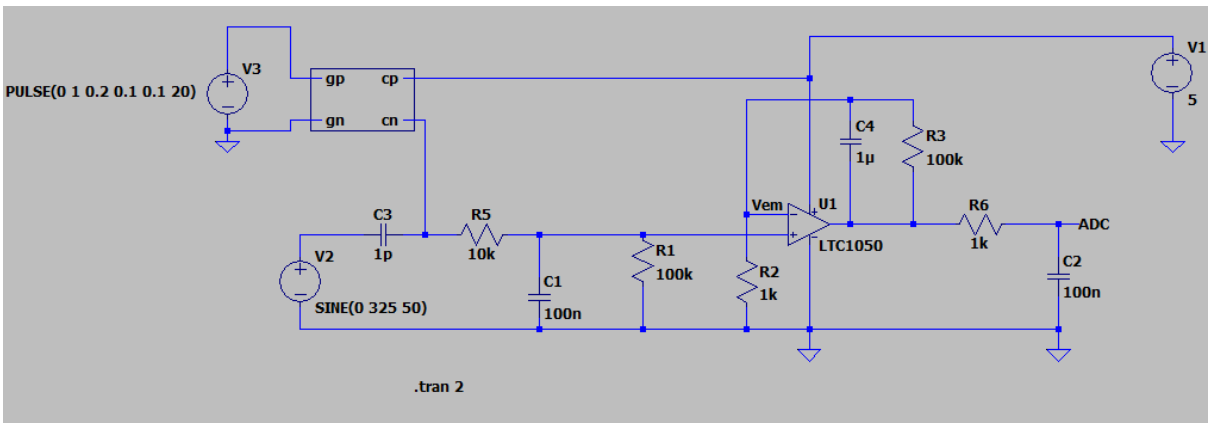

Figure 3: Schematic of a transimpedance operational amplifier circuit which can be used with the graphite sensor.

For a low frequency simplification of the circuit, the resistance of the sensor R_C can be calculated using the following formula:

$$R_c = \frac{V_{CC}}{V_{ADC}} \times R_1 \times (1 + \frac{R_2}{R_3}) - R_1 - R_5$$

The graphite sensor was simulated as shown in *Figure 4* in order to look at the different properties of the circuit (i.e. noise filtering and response time) the simulated sensor was made to give a single pulse that could be studied.

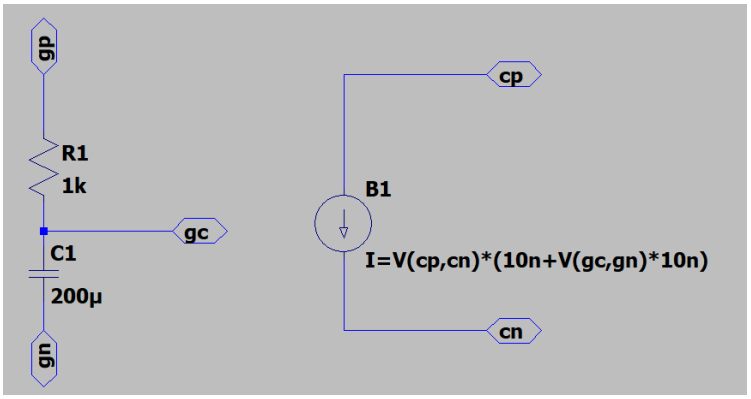

Figure 4: Schematic in LTSpice of the graphite sensor with the signal in the shape of a single pulse.

8 - Deformation Characterization

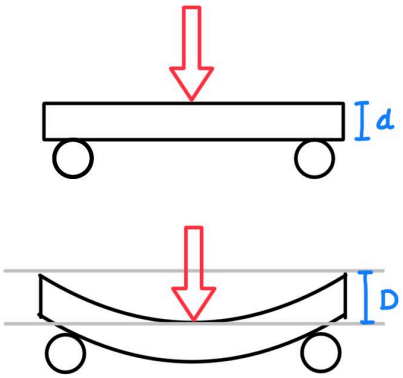

Figure 5: Drawing showing the basic mechanics of a three point flexure test.

In order to calculate the deformation of the graphite sensor, a three point flex test was performed as shown in *Figure 5*. The tests were performed using a 3D printed test bench for which a STL file is available on the GitHub page for the sensor. Using the following formula the deformation of the graphite flex sensor was calculated:

$$e = \frac{6dD}{L^2}$$

e- the deformation of the graphite flex sensor
d and D - thickness and depth respectively as shown in *Figure 5*
L - the length of the graphite flex sensor

The resistance was measured for several depths, D, and for three the types of lead, HB, B3, and B6. The results were then plotted as a function of the deformation, e. In order to characterize the sensor in relation to its deformation, the relative change in resistance, in relation to its flat resistance, was also plotted for the different values of e using the following formulas:

$$\Delta R = \frac{(R_C - R_0)}{R_0}$$

$$R_c = \frac{V_{CC}}{V_{ADC}} \times R_1 \times (1 + \frac{R_2}{R_3}) - R_1 - R_5$$

On the plots that were achieved trendlines were added in order to more clearly determine certain characteristics of the graphite sensor. (See appendix for detailed graphs of the deformation testing.)The slope of the graph was used to give the sensitivity of the sensor for the three types of graphite (see section 6 on *Sensor Sensitivity*).

APPENDIX

The graphs below show the progression of DR/R_0 as a function of the deformation, e, of the graphite sensor. In the same graph the test results for the three graphite types 3B, 6B and HD have been plotted giving a clear vision of the differences in resistance between the three. *Graph 1* shows the results for extension tests and *Graph 2* shows the results for compression tests. Trend lines have been added in order to better compare the results of the different graphite types, and to obtain a linear approximation that is more easily usable. The linear approximation has been deemed appropriate as the experimental results clearly follow the trend lines well.

Graph 1 - Relative change of resistance in extension

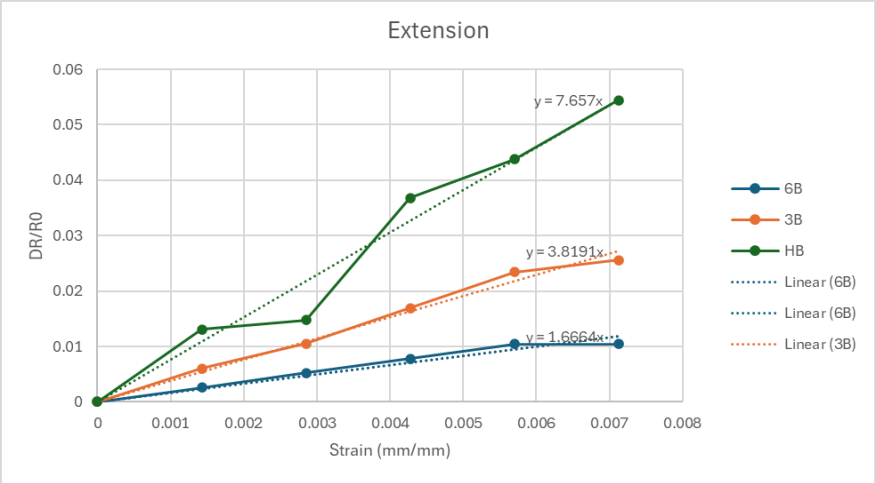
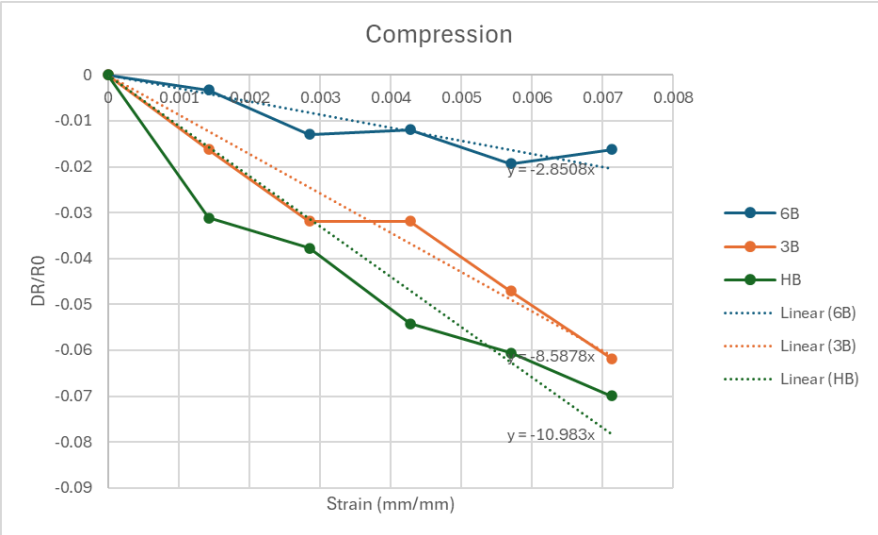
Graph 2 - Relative change of resistance in compression