Precision Chopper Stabilized Operational Amplifier With Internal Capacitors

FEATURES

- No External Components Required
- Noise Tested and Guaranteed
- Low Aliasing Errors
- Maximum Offset Voltage 5μV
- Maximum Offset Voltage Drift 0.5μV/°C
- Low Noise 1.6μV$_{p-p}$ (0.1Hz to 10Hz)
- Minimum Voltage Gain, 130dB
- Minimum PSRR, 125dB
- Minimum CMRR, 120dB
- Low Supply Current 1mA
- Single Supply Operation 4.75V to 16V
- Input Common Mode Range Includes Ground
- Output Swings to Ground
- Typical Overload Recovery Time 3ms

APPLICATIONS

- Thermocouple Amplifiers
- Electronic Scales
- Medical Instrumentation
- Strain Gauge Amplifiers
- High Resolution Data Acquisition
- DC Accurate R, C Active Filters

DESCRIPTION

The LTC1050 is a high performance, low cost chopper stabilized operational amplifier. The unique achievement of the LTC1050 is that it integrates on chip the two sample-and-hold capacitors usually required externally by other chopper amplifiers. Further, the LTC1050 offers better combined overall DC and AC performance than is available from other chopper stabilized amplifiers with or without internal sample/hold capacitors

The LTC1050 has an offset voltage of 0.5μV, drift of 0.01μV/°C, DC to 10Hz, input noise voltage of 1.6μV$_{p-p}$ and a typical voltage gain of 160dB. The slew rate of 4V/μs and a gain bandwidth product of 2.5MHz are achieved with only 1mA of supply current.

Overload recovery times from positive and negative saturation conditions are 1.5ms and 3ms respectively, which represents an improvement of about 100 times over chopper amplifiers using external capacitors. Pin 5 is an optional external clock input, useful for synchronization purposes.

The LTC1050 is available in standard 8-pin metal can, plastic and ceramic dual in line packages as well as an 8-pin SO8 package. The LTC1050 can be an improved plug in replacement for most standard op amps.

2

TYPICAL APPLICATION

High Performance Low Cost Instrumentation Amplifier

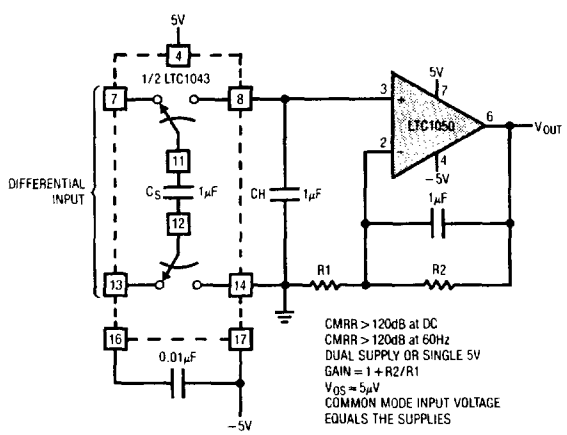

Noise Spectrum

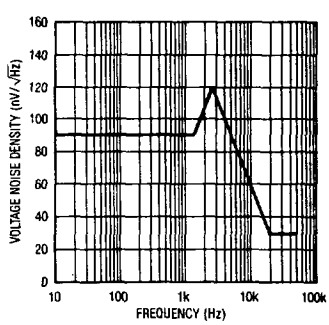

ABSOLUTE MAXIMUM RATINGS

(Note 1)

Total Supply Voltage (V+ to V−) 18V
Input Voltage ..... (V+ + 0.3V) to (V− − 0.3V)
Output Short Circuit Duration ..... Indefinite

Operating Temperature Range
LTC1050 AM/M ..... −55°C to 125°C
LTC1050 AC/C ..... −40°C to 85°C
Storage Temperature Range ..... −65°C to 150°C
Lead Temperature (Soldering, 10 sec.) ..... 300°C

PACKAGE/ORDER INFORMATION

	ORDER PART NUMBER		ORDER PART NUMBER
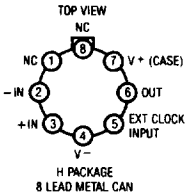	LTC1050AMH LTC1050MH LTC1050ACH LTC1050CH	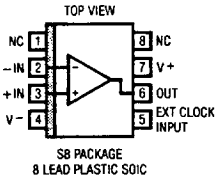	LTC1050CS8
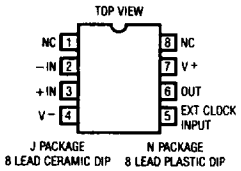	LTC1050AMJ8 LTC1050MJ8 LTC1050ACJ8 LTC1050CJ8 LTC1050ACN8 LTC1050CN8	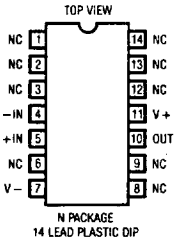	LTC1050ACN LTC1050CN

ELECTRICAL CHARACTERISTICS

$V_S = \pm 5V$, T_A = operating temperature range unless otherwise specified.

PARAMETER	CONDITIONS		LTC1050AM MIN	LTC1050AM TYP	LTC1050AM MAX	LTC1050AC MIN	LTC1050AC TYP	LTC1050AC MAX	UNITS
Input Offset Voltage	$T_A = 25°C$ (Note 3)			±0.5	±5		±0.5	±5	μV
Average Input Offset Drift	(Note 3)	●		±0.01	±0.05		±0.01	±0.05	μV/°C
Long Term Offset Voltage Drift				50			50		nV/√Mo
Input Offset Current	$T_A = 25°C$ (Note 5)	 ●		±20	±60 ±150		±20	±60 ±150	pA pA
Input Bias Current	$T_A = 25°C$ (Note 5)	 ●		±10	±30 ±800		±10	±30 ±100	pA pA
Input Noise Voltage	0.1Hz to 10Hz (Note 6) DC to 1Hz			1.6 0.6	2.1		1.6 0.6	2.1	μV_{p-p} μV_{p-p}
Input Noise Current	f = 10Hz (Note 4)			2.2			2.2		fA/√Hz
Common Mode Rejection Ratio	V_{CM} = V− to +2.7V, $T_A = 25°C$	 ●	120 120	140		120 120	140		dB dB
Power Supply Rejection Ratio	$V_S = \pm 2.375V$ to $\pm 8V$	●	125	140		125	140		dB
Large Signal Voltage Gain	$R_L = 10k\Omega$, $V_{OUT} = \pm 4V$	●	130	160		130	160		dB
Maximum Output Voltage Swing	$R_L = 10k\Omega$ $R_L = 100k\Omega$	●	±4.7	±4.85 ±4.95		±4.7	±4.85 ±4.95		V V
Slew Rate	$R_L = 10k\Omega$, $C_L = 50pF$			4			4		V/μs
Gain Bandwidth Product				2.5			2.5		MHz
Supply Current	No Load, $T_A = 25°C$	 ●		1	1.5 2.3		1	1.5 2.3	mA mA
Internal Sampling Frequency				2.5			2.5		kHz

ELECTRICAL CHARACTERISTICS

$V_S = \pm 5V$, T_A = operating temperature range unless otherwise specified.

PARAMETER	CONDITIONS		LTC1050M MIN	LTC1050M TYP	LTC1050M MAX	LTC1050C MIN	LTC1050C TYP	LTC1050C MAX	UNITS
Input Offset Voltage	$T_A = 25°C$ (Note 3)			±0.5	±5		±0.5	±5	μV
Average Input Offset Drift	(Note 3)	●		±0.01	±0.05		±0.01	±0.05	μV/°C
Long Term Offset Voltage Drift				50			50		nV/√Mo
Input Offset Current	$T_A = 25°C$ (Note 5)			±20	±100		±20	±125	pA
		●			±200			±200	pA
Input Bias Current	$T_A = 25°C$ (Note 5)			±10	±50		±10	±75	pA
		●			±1000			±150	pA
Input Noise Voltage	$R_S = 100\Omega$, 0.1Hz to 10Hz (Note 6)			1.6			1.6		μV_{p-p}
	$R_S = 100\Omega$, DC to 1Hz			0.6			0.6		μV_{p-p}
Input Noise Current	f = 10Hz (Note 4)			2.2			2.2		fA/√Hz
Common Mode Rejection Ratio	$V_{CM} = V-$ to $+2.7V$, $T_A = 25°C$		114	130		114	130		dB
		●	110			110			dB
Power Supply Rejection Ratio	$V_S = \pm 2.375V$ to $\pm 8V$	●	120	140		120	140		dB
Large Signal Voltage Gain	$R_L = 10k\Omega$, $V_{OUT} = \pm 4V$	●	120	160		120	160		dB
Maximum Output Voltage Swing	$R_L = 10k\Omega$	●	±4.7	±4.85		±4.7	±4.85		V
	$R_L = 100k\Omega$			±4.95			±4.95		V
Slew Rate	$R_L = 10k\Omega$, $C_L = 50pF$			4			4		V/μs
Gain Bandwidth Product				2.5			2.5		MHz
Supply Current	No Load, $T_A = 25°C$			1	1.5		1	1.5	mA
		●			2.3			2.3	mA
Internal Sampling Frequency				2.5			2.5		kHz

The ● denotes the specifications which apply over the full operating temperature range.

Note 1: Absolute Maximum ratings are those values beyond which life of the device may be impaired.

Note 2: Connecting any terminal to voltages greater than V+ or less than V− may cause destructive latch-up. It is recommended that no sources operating from external supplies be applied prior to power-up of the LTC1050.

Note 3: These parameters are guaranteed by design. Thermocouple effects preclude measurement of these voltage levels in high speed automatic test systems. V_{OS} is measured to a limit determined by test equipment capability.

Note 4: Current Noise is calculated from the formula: $In = \sqrt{(2q \bullet 1b)}$ where $q = 1.6 \times 10^{-19}$ Coulomb.

Note 5: At $T_A \leq 0°C$ these parameters are guaranteed by design and not tested.

Note 6: Every lot of LTC1050AM and LTC1050AC is 100% tested for Broadband Noise @ 1kHz and sample tested for Input Noise Voltage @ 0.1Hz to 10Hz.

TEST CIRCUITS

Electrical Characteristics Test Circuit

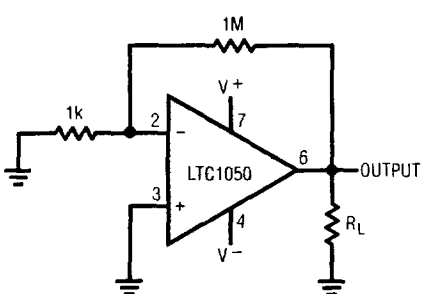

DC-10Hz Noise Test Circuit

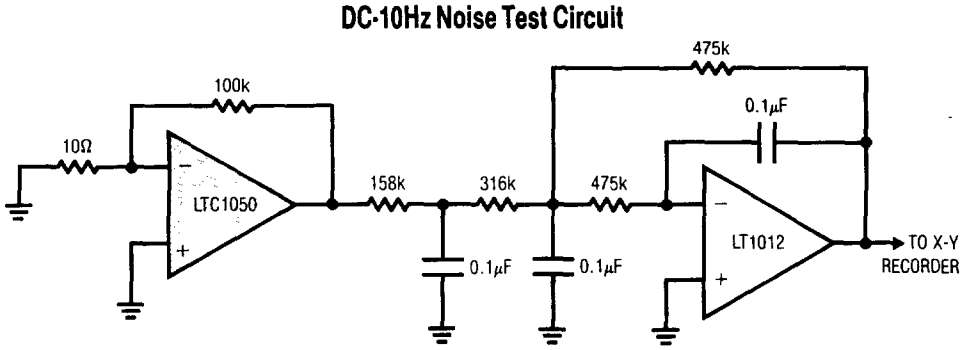

FOR 1Hz NOISE BW INCREASE ALL THE CAPACITORS BY A FACTOR OF 10.

TYPICAL PERFORMANCE CHARACTERISTICS

Offset Voltage vs Sampling Frequency

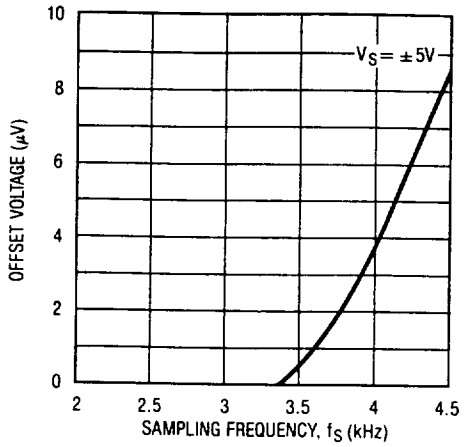

$10Hz_{p-p}$ Noise vs Sampling Frequency

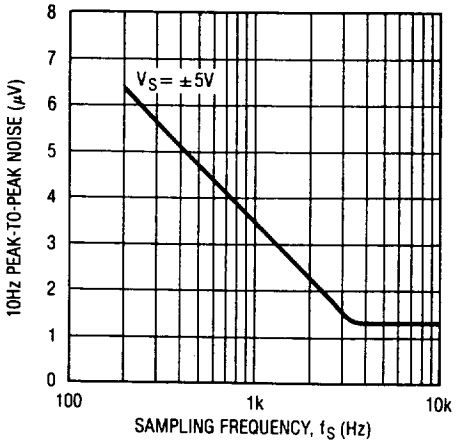

Common-Mode Input Range vs Supply Voltage

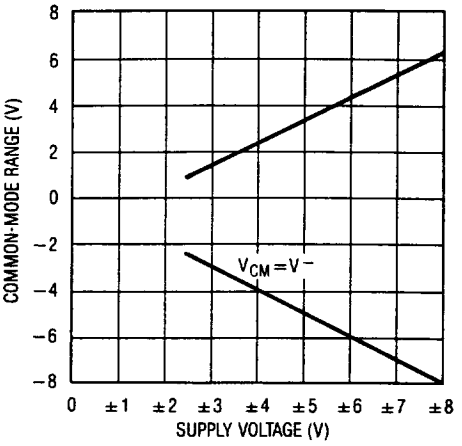

Sampling Frequency vs Supply Voltage

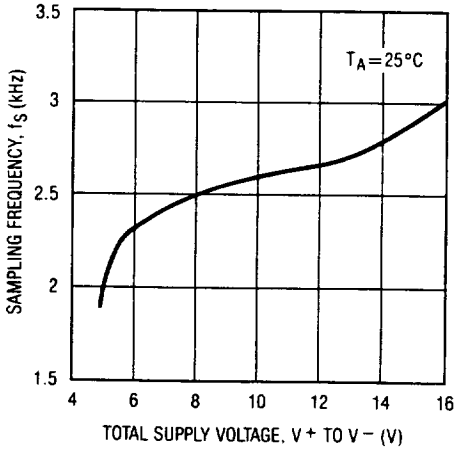

Sampling Frequency vs Temperature

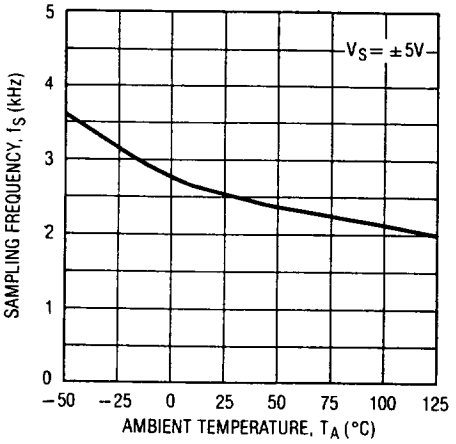

Overload Recovery

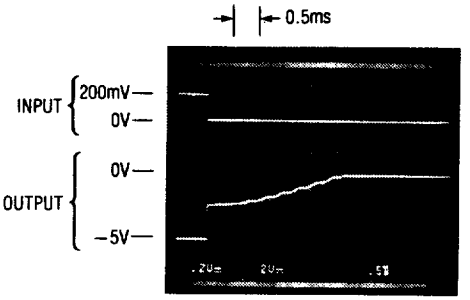

$A_V = -100$ $V_S = \pm 5V$

Supply Current vs Supply Voltage

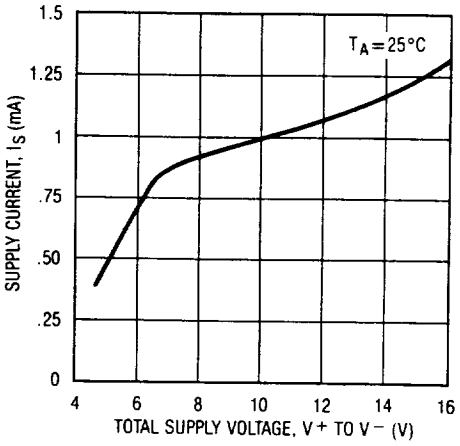

Supply Current vs Temperature

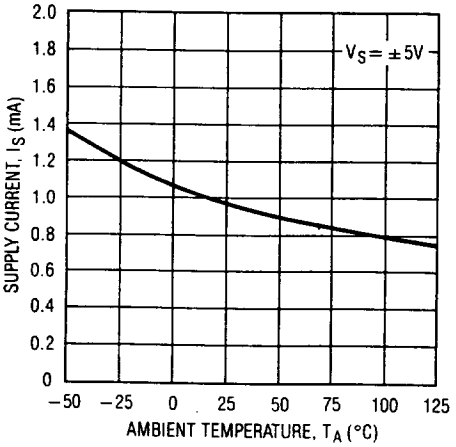

Output Short Circuit Current vs Supply Voltage

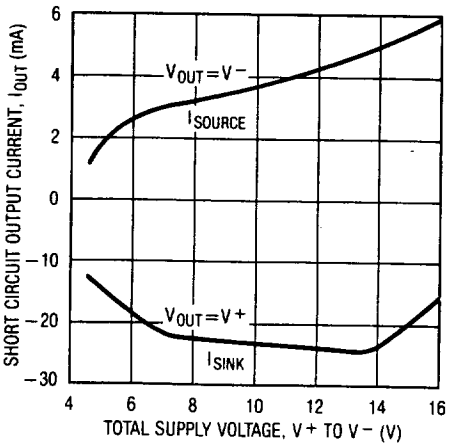

LINEAR TECHNOLOGY

TYPICAL PERFORMANCE CHARACTERISTICS

Gain/Phase vs Frequency

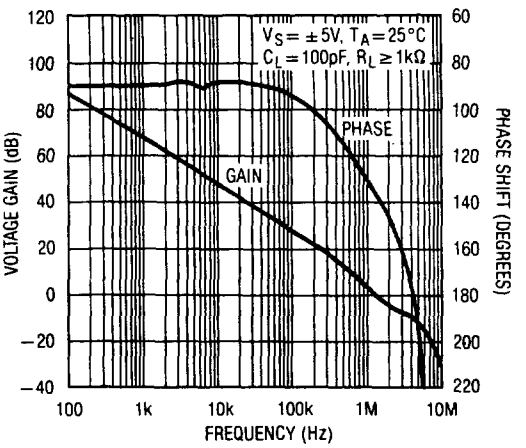

Small Signal Transient Response

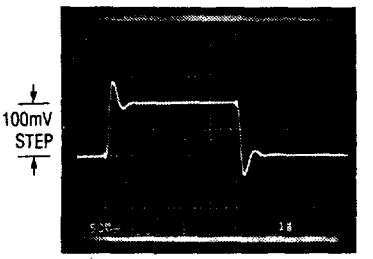

$A_V = +1$ $R_L = 10k\Omega$ $C_L = 100pF$ $V_S = \pm 5V$

Large Signal Transient Response

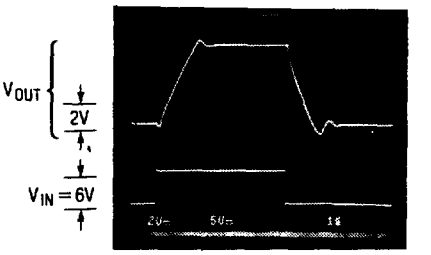

$A_V = +1$ $R_L = 10k\Omega$ $C_L = 100pF$ $V_S = \pm 5V$

2

LTC1050 DC to 1Hz Noise

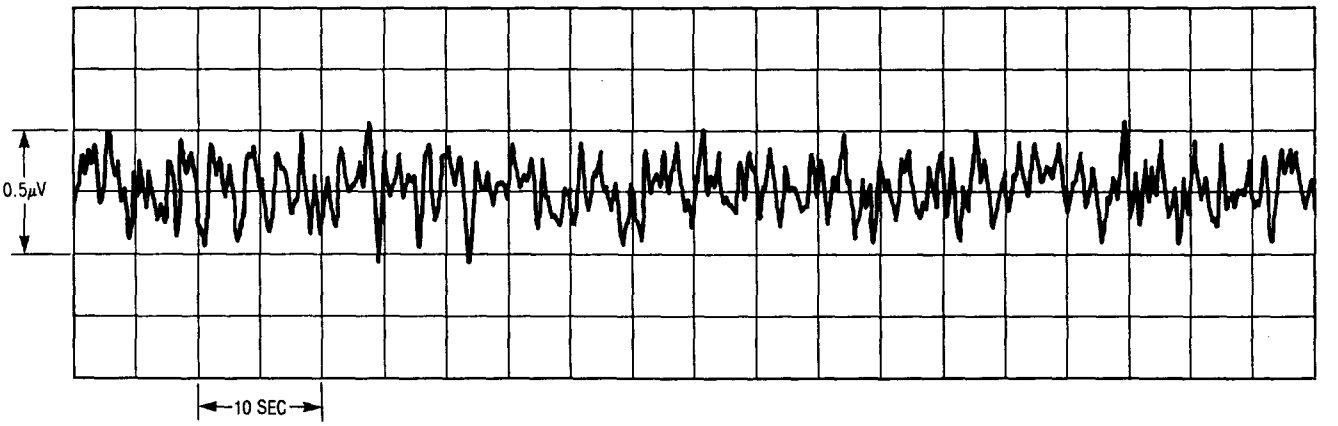

LTC1050 DC to 10Hz Noise

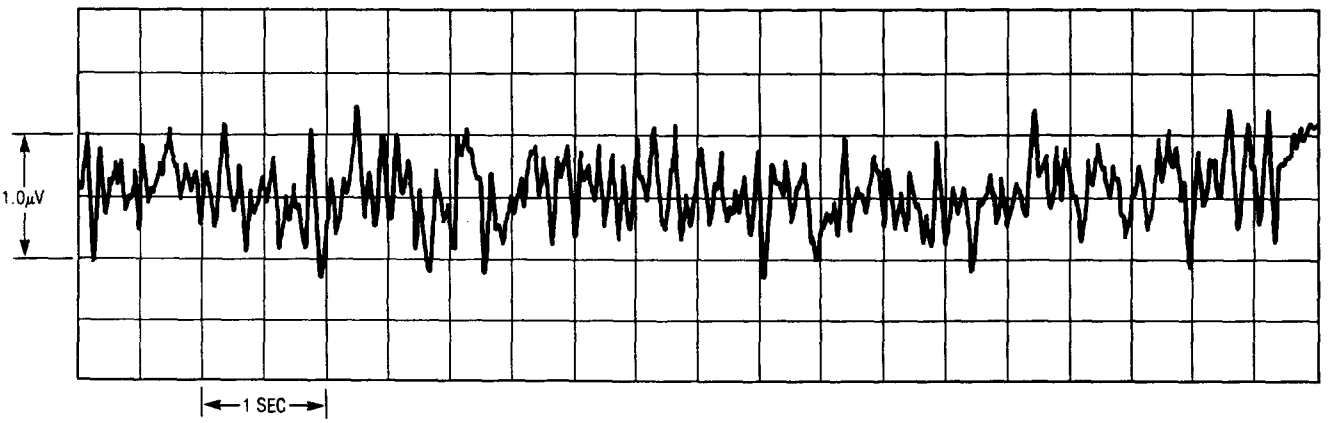

APPLICATIONS INFORMATION

ACHIEVING PICOAMPERE/MICROVOLT PERFORMANCE

Picoamperes

In order to realize the picoampere level of accuracy of the LTC1050, proper care must be exercised. Leakage currents in circuitry external to the amplifier can significantly degrade performance. High quality insulation should be used (e.g., Teflon, Kel-F); cleaning of all insulating surfaces to remove fluxes and other residues will probably be necessary — particularly for high temperature performance. Surface coating may be necessary to provide a moisture barrier in high humidity environments.

Board leakage can be minimized by encircling the input connections with a guard ring operated at a potential close to that of the inputs: in inverting configurations the guard ring should be tied to ground; in non-inverting connections to the inverting input (see Figure 1). Guarding both sides of the printed circuit board is required. Bulk leakage reduction depends on the guard ring width.

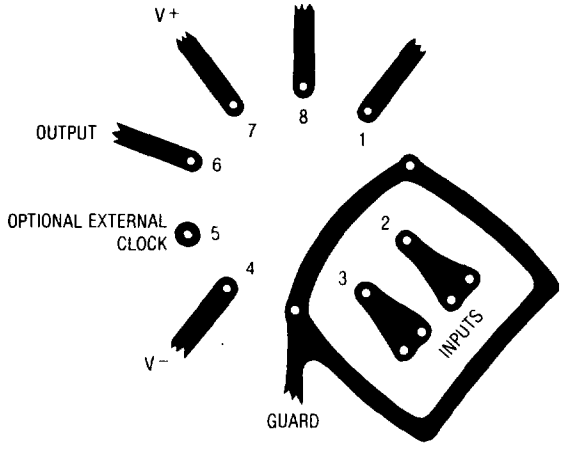

Figure 1.

Microvolts

Thermocouple effects must be considered if the LTC1050's ultra low drift is to be fully utilized. Any connection of dissimilar metals forms a thermoelectric junction producing an electric potential which varies with temperature (Seebeck effect). As temperature sensors, thermocouples exploit this phenomenon to produce useful information. In low drift amplifier circuits the effect is a primary source of error.

Connectors, switches, relay contacts, sockets, resistors, solder, and even copper wire are all candidates for thermal EMF generation. Junctions of copper wire from different manufacturers can generate thermal EMFs of 200nV/°C — 4 times the maximum drift specification of the LTC1050. The copper/kovar junction, formed when wire or printed circuit traces contact a package lead, has a thermal EMF of approximately 35μV/°C — 700 times the maximum drift specification of the LTC1050.

Minimizing thermal EMF-induced errors is possible if judicious attention is given to circuit board layout and component selection. It is good practice to minimize the number of juctions in the amplifier's input signal path. Avoid connectors, sockets, switches and relays where possible. In instances where this is not possible, attempt to balance the number and type of junctions so that differential cancellation occurs. Doing this may involve deliberately introducing junctions to offset unavoidable junctions.

Figure 2 is an example ot the introduction of an unnecessary resistor to promote differential thermal balance. Maintaining compensating junctions in close physical proximity will keep them at the same temperature and reduce thermal EMF errors.

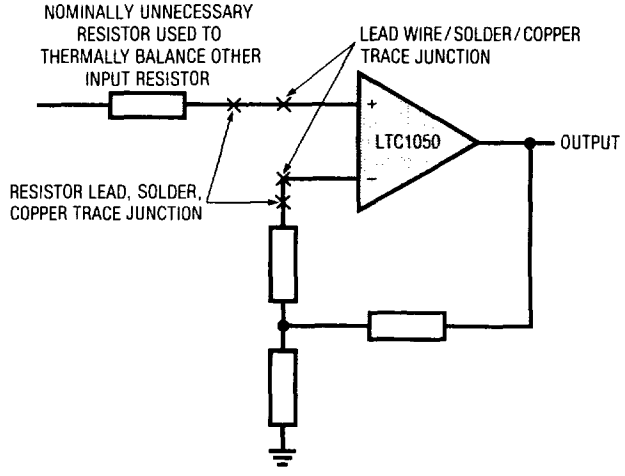

Figure 2.

APPLICATIONS INFORMATION

When connectors, switches, relays and/or sockets are necessary they should be selected for low thermal EMF activity. The same techniques of thermally balancing and coupling the matching junctions are effective in reducing the thermal EMF errors of these components.

Resistors are another source of thermal EMF errors. Table 1 shows the thermal EMF generated for different resistors. The temperature gradient across the resistor is important, not the ambient temperature. There are two junctions formed at each end of the resistor and if these junctions are at the same temperature, their thermal EMFs will cancel each other. The termal EMF numbers are approximate and vary with resistor value. High values give higher thermal EMF.

Table 1. Resistor Thermal EMF

Resistor Type	Thermal EMF/°C Gradient
Tin Oxide	~mV/°C
Carbon Composition	~450μV/°C
Metal Film	~20μV/°C
Wire Wound	
Evenohm	~2μV/°C
Manganin	~2μV/°C

PACKAGE-INDUCED OFFSET VOLTAGE

Package-induced thermal EMF effects are another important source of errors. It arises at the copper/kovar junctions formed when wire or printed circuit traces contact a package lead. Like all the previously mentioned thermal EMF effects, it is outside the LTC1050's offset nulling loop and cannot be cancelled. Metal can H packages exhibit the worst warm-up drift. The input offset voltage specification of the LTC1050 is actually set by the package-induced warm-up drift rather than by the circuit itself. The thermal time constant ranges from 0.5 to 3 minutes, depending on package type.

OPTIONAL EXTERNAL CLOCK

An external clock is not required for the LTC1050 to operate. The internal clock circuit of the LTC1050 sets the nominal sampling frequency at around 2.5kHz. This frequency is chosen such that it is high enough to remove the amplifier 1/f noise, yet still low enough to allow internal circuits to settle. The oscillator of the internal clock circuit has a frequency 4 times the sampling frequency and its output is brought out to pin 5 through a 2kΩ resistor. When the LTC1050 operates without using an external clock, pin 5 should be left floating and capacitive loading on this pin shoud be avoided. If the oscillator signal on pin 5 is used to drive other external circuits, a buffer with low input capacitance is required to minimize loading on this pin. Figure 3 illustrates the internal sampling frequency versus capacitive loading at pin 5.

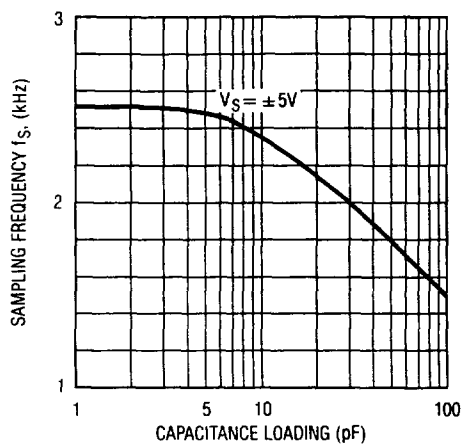

Figure 3. Sampling Frequency vs Capacitance Loading at Pin 5

When an external clock is used, it is directly applied to pin 5. The internal oscillator signal on pin 5 has very low drive capability and can be over-driven by any external signal. When the LTC1050 operates on ±5V power supplies, the external clock level is TTL compatible.

Using an external clock can affect performance of the LTC1050. Effects of external clock frequency on input offset voltage and input noise voltage are shown in the section of typical performance characteristics. The sampling frequency is the external clock frequency divided by 4. Input bias currents at temperatures below 100°C are dominated by the charge injection of input switches and they are basically proportional to the sampling frequency. At higher temperatures, input bias currents are mainly due to leakage currents of the input protection devices and are insensitive to the sampling frequency.

APPLICATIONS INFORMATION

LOW SUPPLY OPERATION

The minimum supply for proper operation of the LTC1050 is typically below 4.0V (±2.0V). In single supply applications, PSRR is guaranteed down to 4.7V (±2.35V) to ensure proper operation down to the minimum TTL specified voltage of 4.75V.

PIN COMPATIBILITY

The LTC1050 is pin compatible with the 8-pin versions of 7650, 7652 and other chopper-stabilized amplifiers. The 7650 and 7652 require the use of two external capacitors connected to pin 1 and 8 which are not needed for the LTC1050. Pin 1 and pin 8 of the LTC1050 are not connected internally while pin 5 is an optional external clock input pin. The LTC1050 can be a direct plug in for the 7650 and 7652 even if the two capacitors are left on the circuit board.

In applications operating from below +16V total power supply, (±8V), the LTC1050 can replace many industry-standard operational amplifiers such as the 741, LM101, LM108, OP07, etc. For devices like the 741 and LM101, the removal of any connection to pin 5 is all that is needed.

TYPICAL APPLICATIONS

Strain Gauge Signal Conditioner with Bridge Excitation

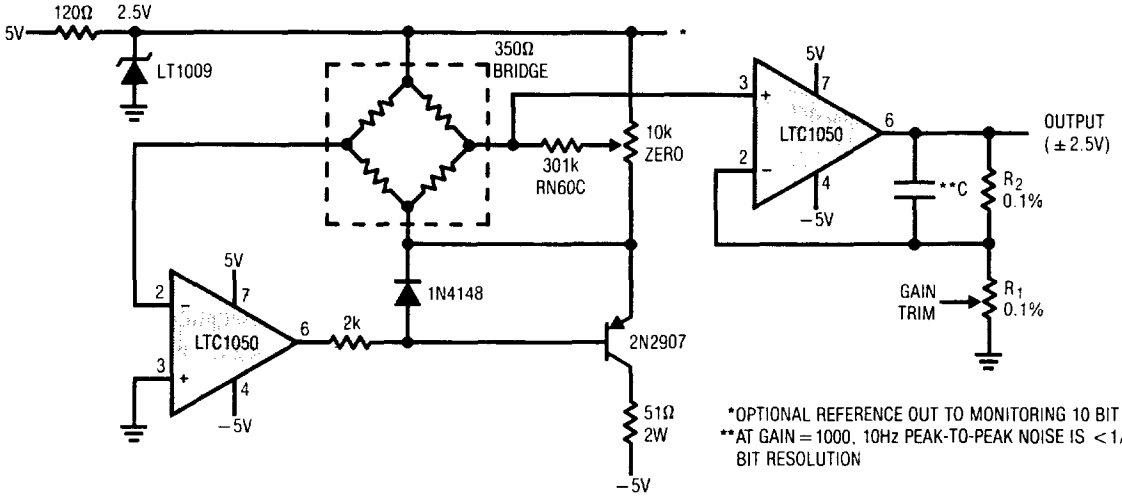

Single Supply Thermocouple Amplifier

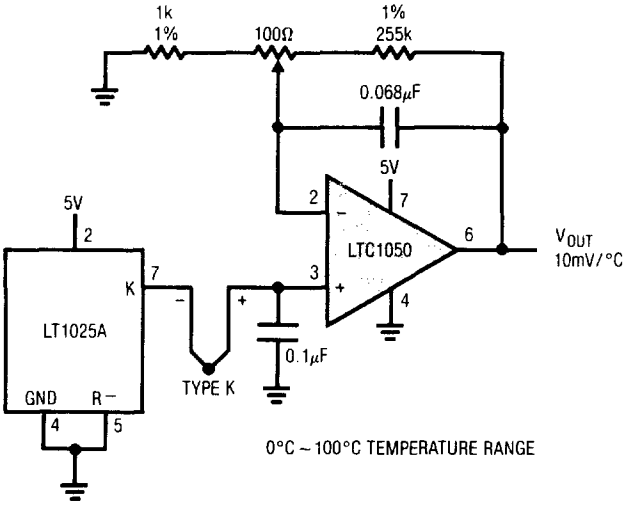

TYPICAL APPLICATIONS

Battery Operated Temperature Monitor with 10-Bit Serial Output A/D

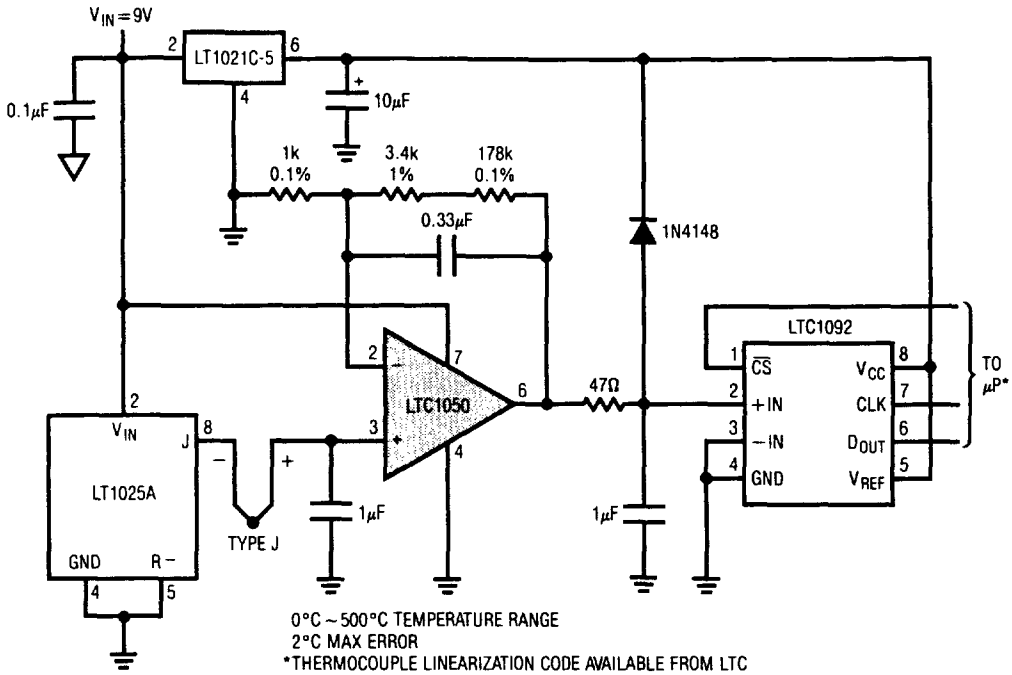

Air Flow Detector

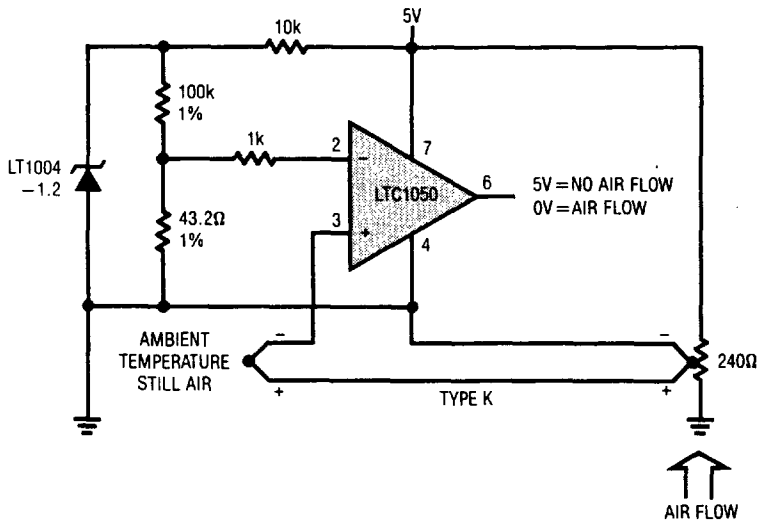

TYPICAL APPLICATIONS

Fast Precision Inverter

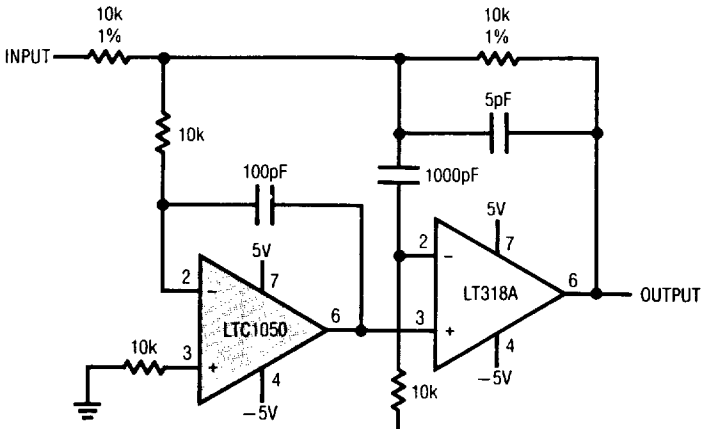

FULL POWER BANDWIDTH = 2MHz
SLEW RATE ≥ 40V/μS
SETTLING TIME = 5μS TO 0.01% (10V STEP)
OFFSET VOLTAGE = 5μV
OFFSET DRIFT = 50nV/°C

± 100mA Output Drive

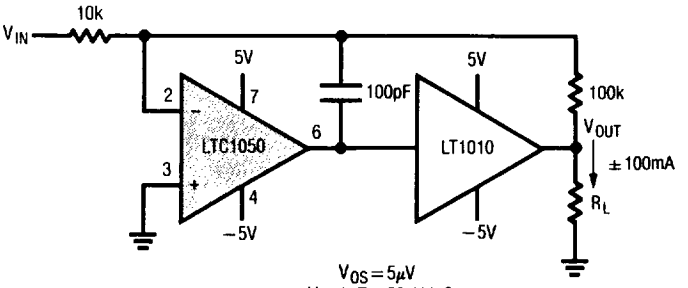

$V_{OS} = 5\mu V$
$V_{OS}/\Delta T = 50nV/°C$
GAIN = 10
FULL POWER BANDWIDTH = 10kHz

Ground Referred Precision Current Sources

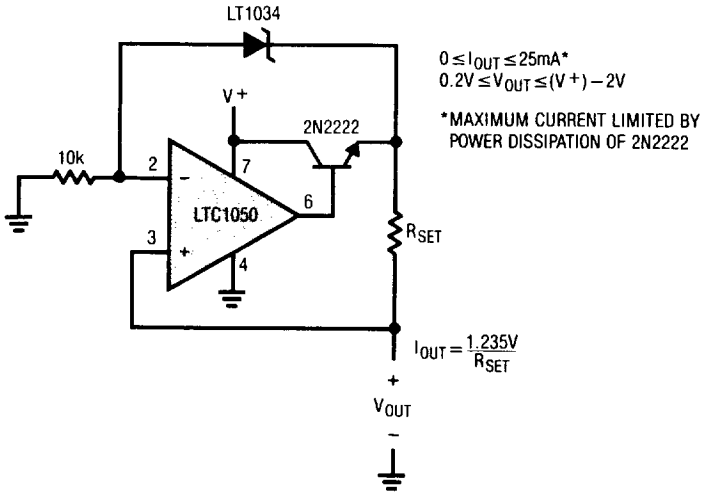

$0 \le I_{OUT} \le 25mA$*
$0.2V \le V_{OUT} \le (V+) - 2V$

*MAXIMUM CURRENT LIMITED BY POWER DISSIPATION OF 2N2222

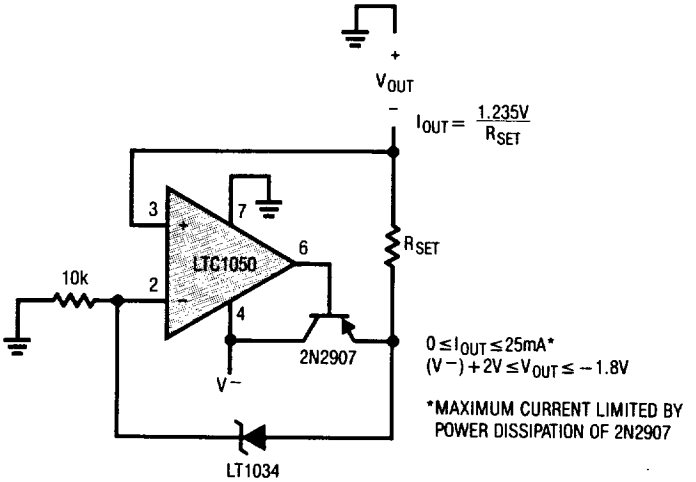

$0 \le I_{OUT} \le 25mA$*
$(V-) + 2V \le V_{OUT} \le -1.8V$

*MAXIMUM CURRENT LIMITED BY POWER DISSIPATION OF 2N2907

TYPICAL APPLICATIONS

Precision Voltage Controlled Current Source with Ground Referred Input and Output

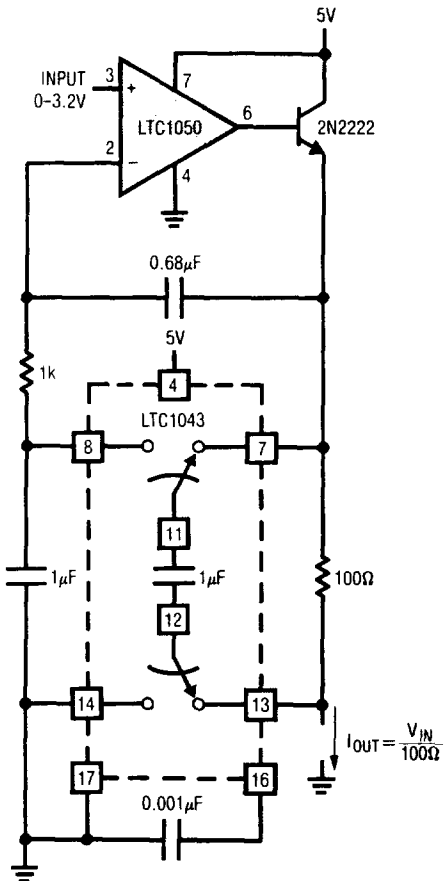

Sample-and-Hold Amplifier

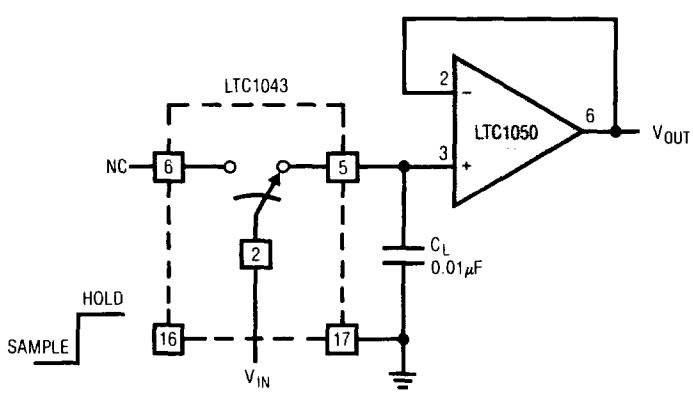

FOR $1V \leq V_{IN} \leq 4V$, THE HOLD STEP IS $\leq 300\mu V$.
ACQUISITION TIME IS DETERMINED BY THE SWITCH R_{ON}, C_L TIME CONSTANT

Ultra Precision Voltage Inverter

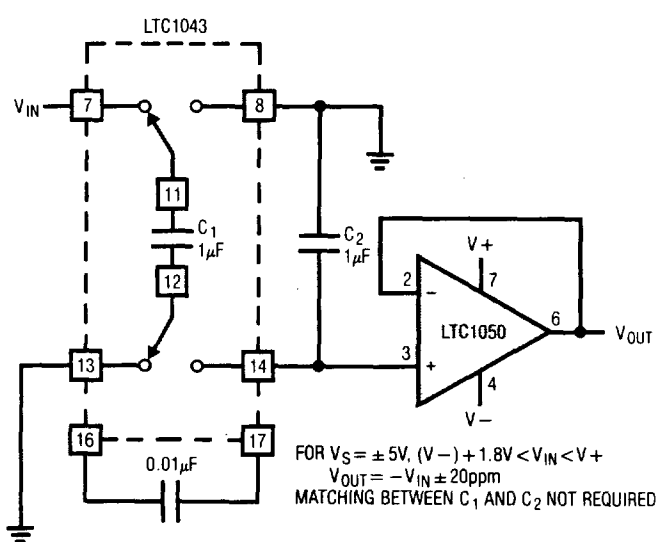

FOR $V_S = \pm 5V$, $(V-) + 1.8V < V_{IN} < V+$
$V_{OUT} = -V_{IN} \pm 20ppm$
MATCHING BETWEEN C_1 AND C_2 NOT REQUIRED

TYPICAL APPLICATIONS

Instrumentation Amplifier with Low Offset and Input Bias Current

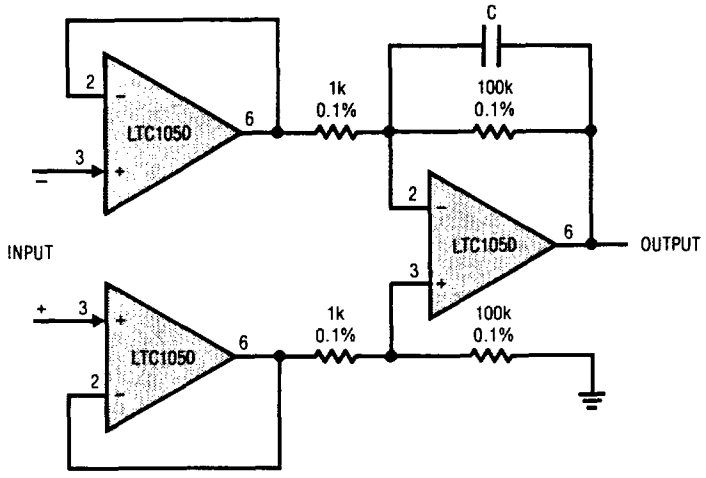

OFFSET VOLTAGE ≤ ± 10μV
INPUT BIAS CURRENT = 15pA
CMRR = 100dB FOR GAIN = 100
INPUT REFERRED NOISE = 5μV$_{p-p}$ FOR C = 0.1μF
= 20μV$_{p-p}$ FOR C = 0.01μF

Instrumentation Amplifier with 100V Common Mode Input Voltage

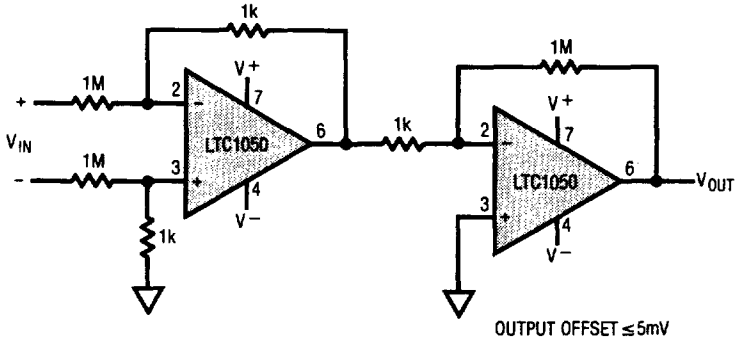

OUTPUT OFFSET ≤ 5mV
FOR 0.1% RESISTORS, CMRR = 54dB

Single Supply Instrumentation Amplifier

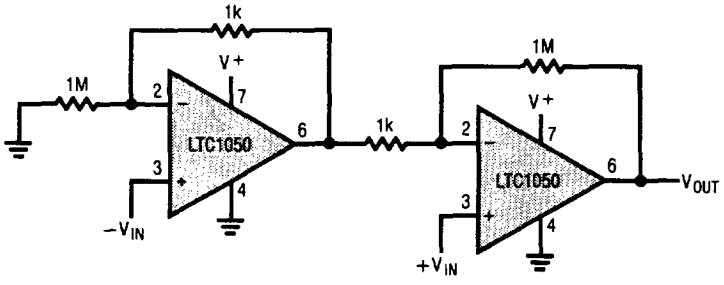

OUTPUT OFFSET ≤ 5mV
FOR 0.1% RESISTORS, CMRR = 54dB

TYPICAL APPLICATIONS

Photodiode Amplifier

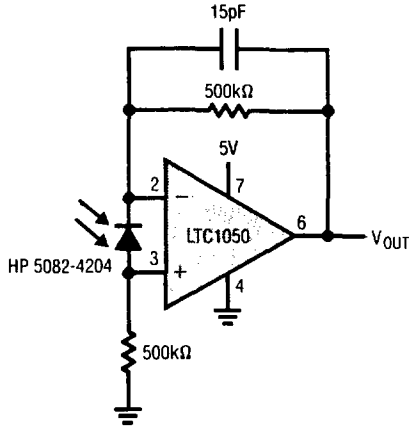

6 Decade Log Amplifier

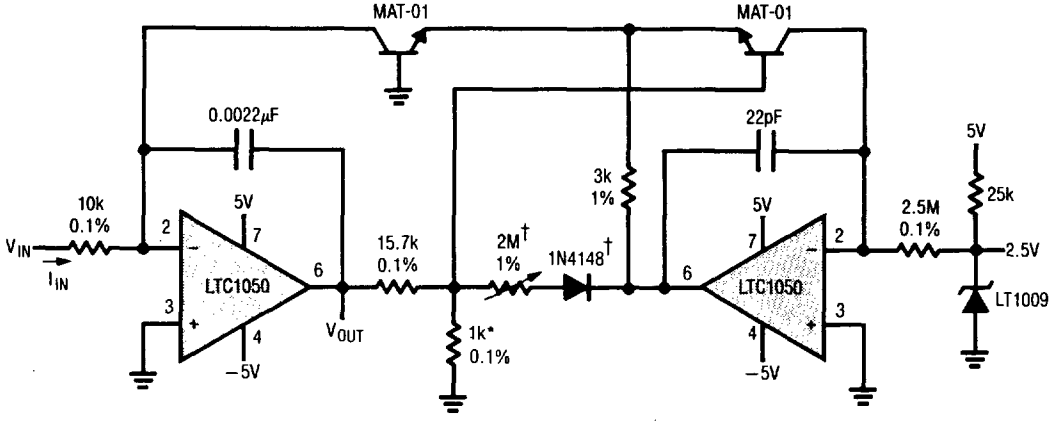

ERROR REFERRED TO INPUT <1%
FOR INPUT CURRENT RANGE 1nA – 1mA
*TEL LAB TYPE Q81
†CORRECTS FOR NONLINEARITIES

$$V_{OUT} = -LOG\left(\frac{I_{IN}}{1\mu A}\right) = -LOG\left(\frac{V_{IN}}{10mV}\right) = -LOG\,(V_{IN}) - 2V$$

DC Accurate, 10Hz, 7th Order Lowpass Bessel Filter

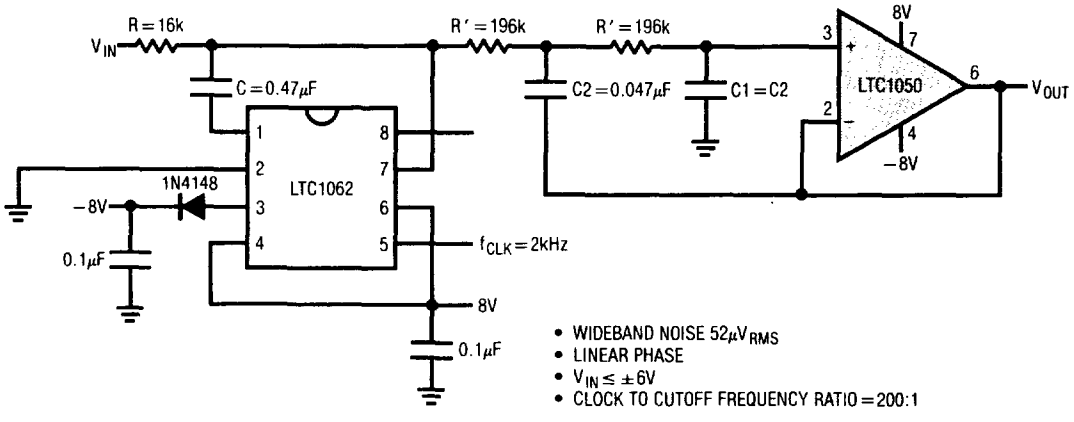

- WIDEBAND NOISE 52μV$_{RMS}$
- LINEAR PHASE
- $V_{IN} \leq \pm 6V$
- CLOCK TO CUTOFF FREQUENCY RATIO = 200:1

TYPICAL APPLICATIONS

DC Accurate 10th Order Max Flat Lowpass Filter

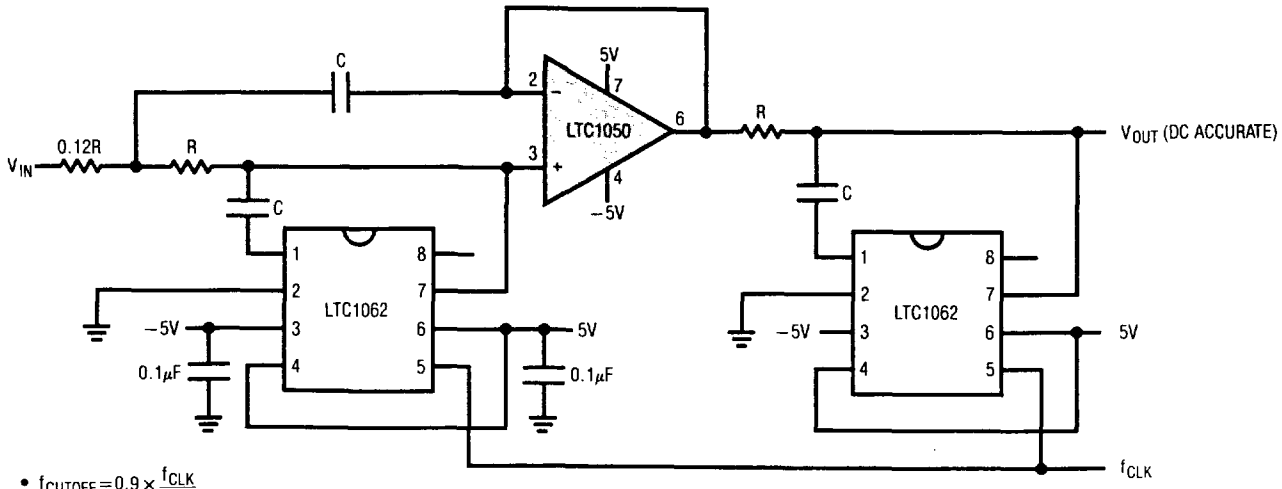

- $f_{CUTOFF} = 0.9 \times \frac{f_{CLK}}{100}$
- $RC = \frac{0.2244}{f_{CUTOFF}}$
- 60dB/OCT. SLOPE
- PASSBAND ERROR < 0.1dB FOR $0 \leq f \leq 0.67\ f_{CUTOFF}$
- THD = 0.04%, WIDEBAND NOISE = $120\mu V_{RMS}$
- $f_{CLK} \simeq 100$kHz

DC Accurate, Noninverting 2nd Order Lowpass Filter

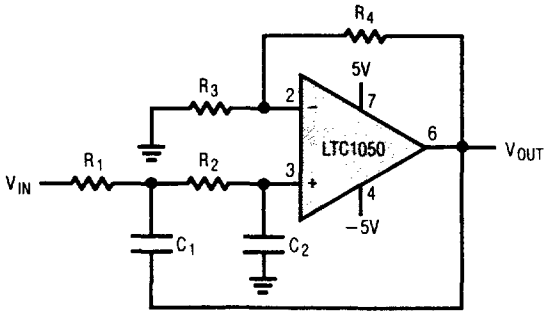

$Q = 0.707$, $f_C = 20$Hz. FOR $f_C = 10$Hz, THE RESISTOR (R_1, R_2) VALUES SHOULD BE DOUBLED.

Gain of One, 10Hz 3rd Order Bessel DC Accurate Lowpass Filter

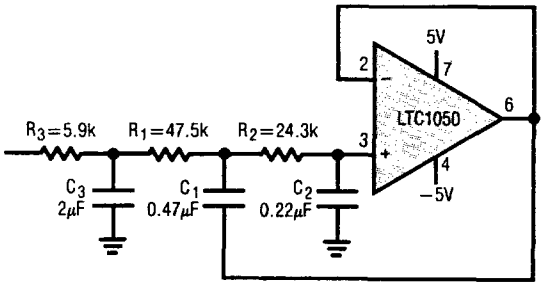

Component Values

DC GAIN	R_3	R_4	R_1	R_2	C_1	C_2
1	∞	0	32.4k	18.7k	0.47μF	0.22μF
2	10k	10k	11.8k	24.3k	0.47μF	0.47μF
4	10.5k	31.6k	18.7k	34.8k	0.22μF	0.47μF
6	10.2k	51.1k	14k	46.4k	0.22μF	0.47μF
8	10.2k	71.5k	11.8k	54.9k	0.22μF	0.47μF
10	10.1k	90.9k	10.5k	61.9k	0.22μF	0.47μF

PACKAGE DESCRIPTION Dimensions in inches (millimeters) unless otherwise noted.

H Package
8 Lead TO-5 Metal Can

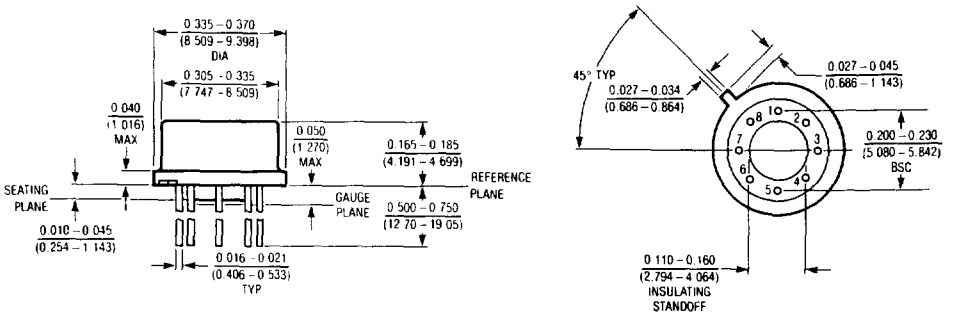

NOTE: LEAD DIAMETER IS UNCONTROLLED BETWEEN THE REFERENCE PLANE AND SEATING PLANE.

H8188

2

J Package
8 Lead Ceramic DIP

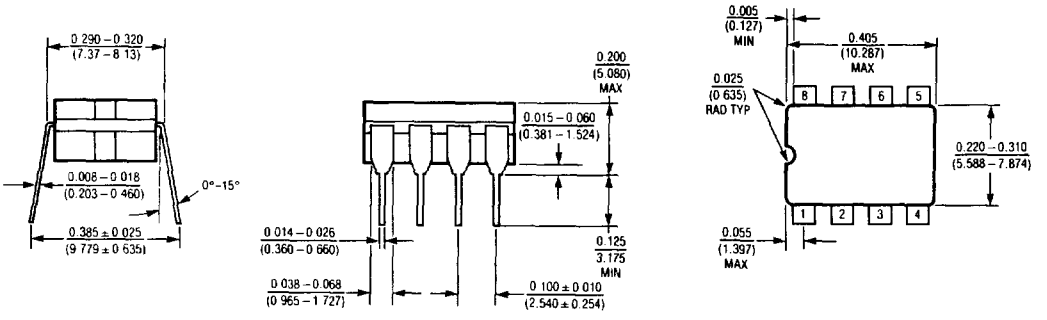

J8188

N Package
8 Lead Plastic DIP

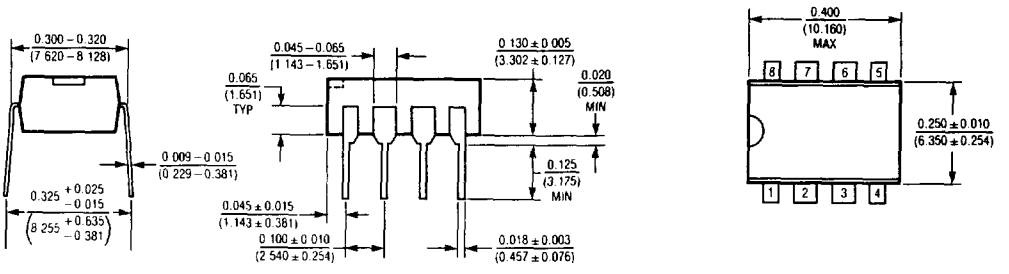

N8188

PACKAGE DESCRIPTION Dimensions in inches (millimeters) unless otherwise noted.

S8 Package
8 Lead Plastic SOIC

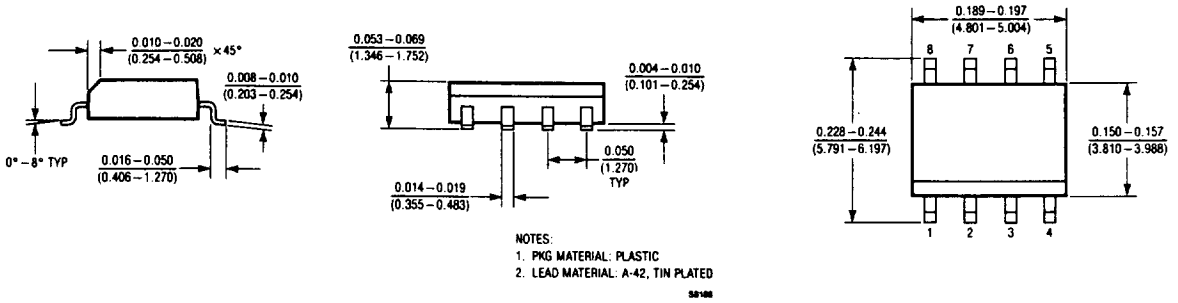

NOTES:
1. PKG MATERIAL: PLASTIC
2. LEAD MATERIAL: A-42, TIN PLATED
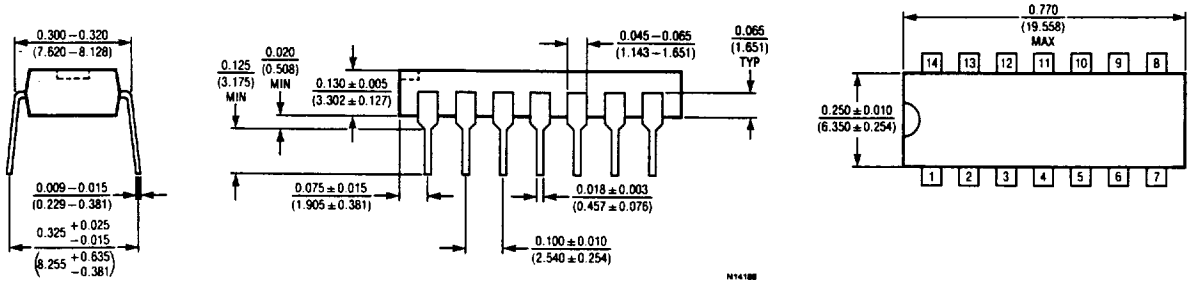
N Package
14 Lead Plastic DIP