INSTITUT NATIONAL DES SCIENCES APPLIQUÉES TOULOUSE

Graphic Strain Sensor

1 Overview

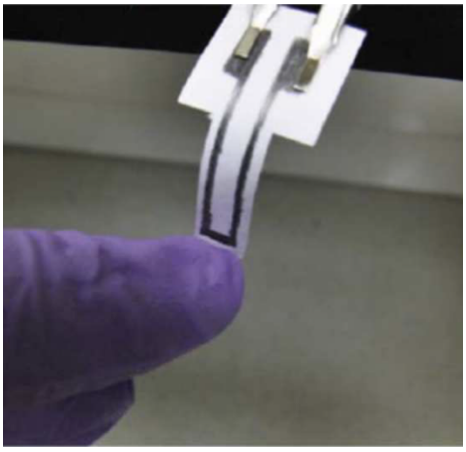

- Paper-based graphite strain sensor
- Analog response based on resistance variation
- Sensitive to tensile and compressive deformation
- Low-cost and easy fabrication (pencil deposition)
- Compatible with 0–5V measurement circuits
- Flexible and lightweight structure

2 Description

The Graphite Strain Sensor is based on a conductive network of graphite particles deposited on a paper substrate.

When a pencil trace is drawn on paper, graphite particles adhere to the fibers, forming a thin conductive film. This film behaves as a disordered granular system where electrical conduction occurs through contacts between graphite particles.

Mechanical deformation affects this network:

- Under tensile strain, the distance between particles increases, reducing electrical contacts and increasing resistance.
- Under compressive strain, particles are pushed closer together, improving connectivity and decreasing resistance.

The sensor response is therefore governed by variations in the percolation network and tunneling effects between neighboring particles.

Due to its structure, the sensor is highly sensitive to small deformations but also influenced by fabrication parameters such as graphite density, pencil grade, and environmental conditions (humidity, temperature).

The resulting resistance variation can be measured using a transimpedance circuit, to obtain a usable analog signal.

3 Technical specification

Parameter	Min	Typical	Max	Unit
Supply voltage	–	5	5.25	V
Output voltage	0	–	5	V
Output current	–	10^{-7}	–	A
Operating temperature	10	20	35	°C
Storage temperature	0	–	60	°C
Humidity (operating)	0	30	60	%
Sensor resistance	10^5	10^6	10^7	Ω
Thickness	15	–	35	mm
Weight	70	–	140	mg
Number of pins		2		–

Pad	name	Value
Pad 1	Vin	à remplir
Pad 2	Out	à remplir

4 Pin Configuration

Pin Arduino	Signal	Description
5V	VCC	Power supply to sensor and circuit
GND	GND	Common ground
A0	AO	Amplified analog output
A1	FLEX	Flex sensor input
D10	SS	Digital Potentiometer
D11	MOSI	S Digital Potentiometer
D12	MISO	Digital Potentiometer)
D13	SCK	Clock
A4	SDA	I2C Data (OLED display)
A5	SCL	I2C Clock (OLED display)
D2	CLK	Encoder clock signal
D4	DATA	Encoder data signal
D5	SW	Encoder push button
D7	TX	Bluetooth transmission
D8	RX	Bluetooth reception

5 Kicad (Schéma et PCB)

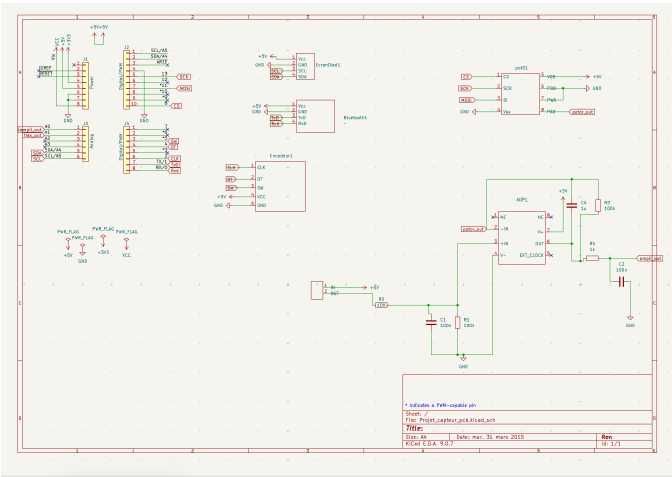

Figure 1: Schéma électronique

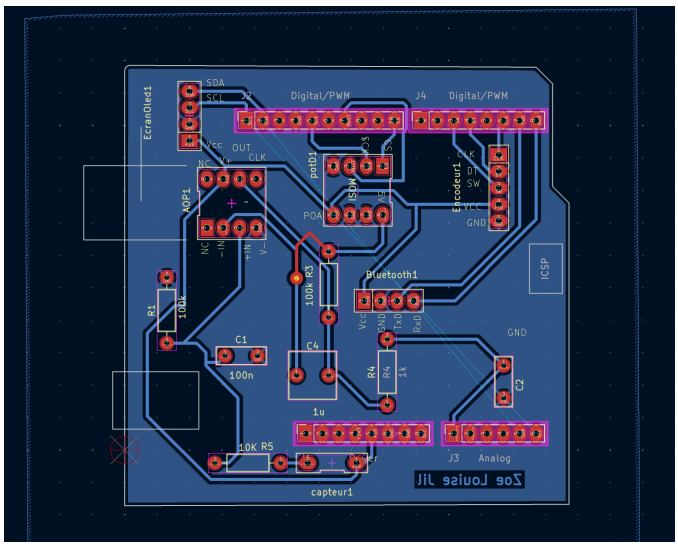

Figure 2: Routage du PCB

6 Mesure

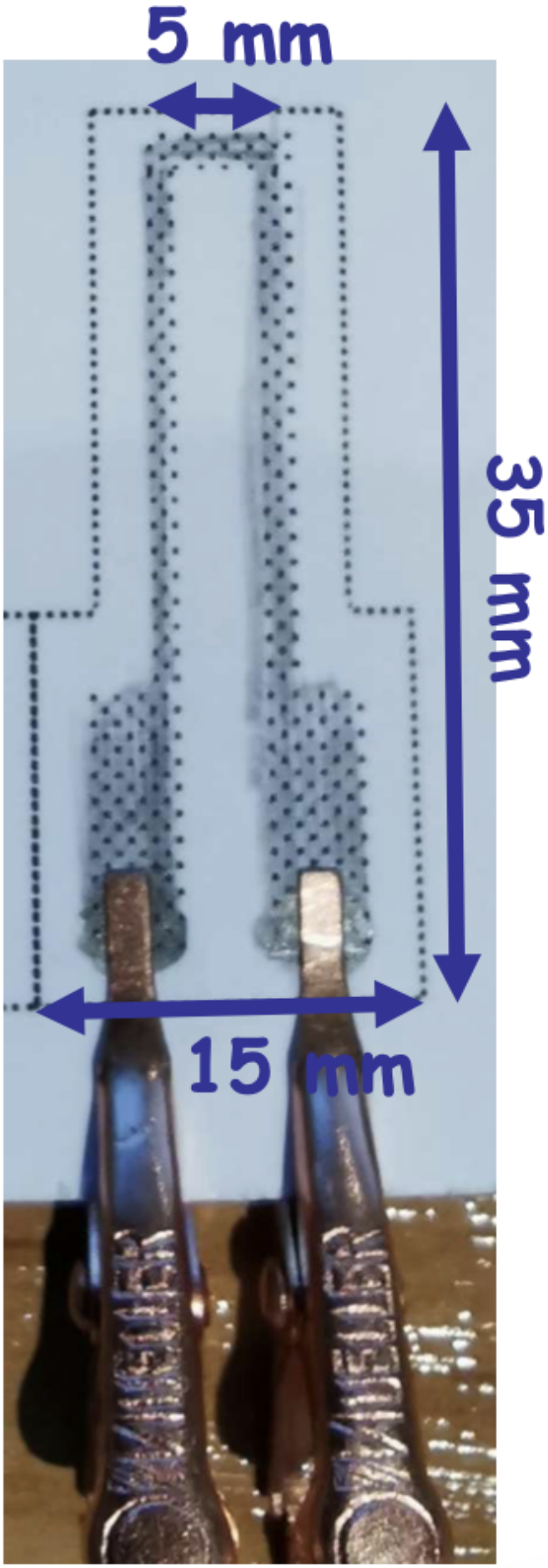

7 Résultat

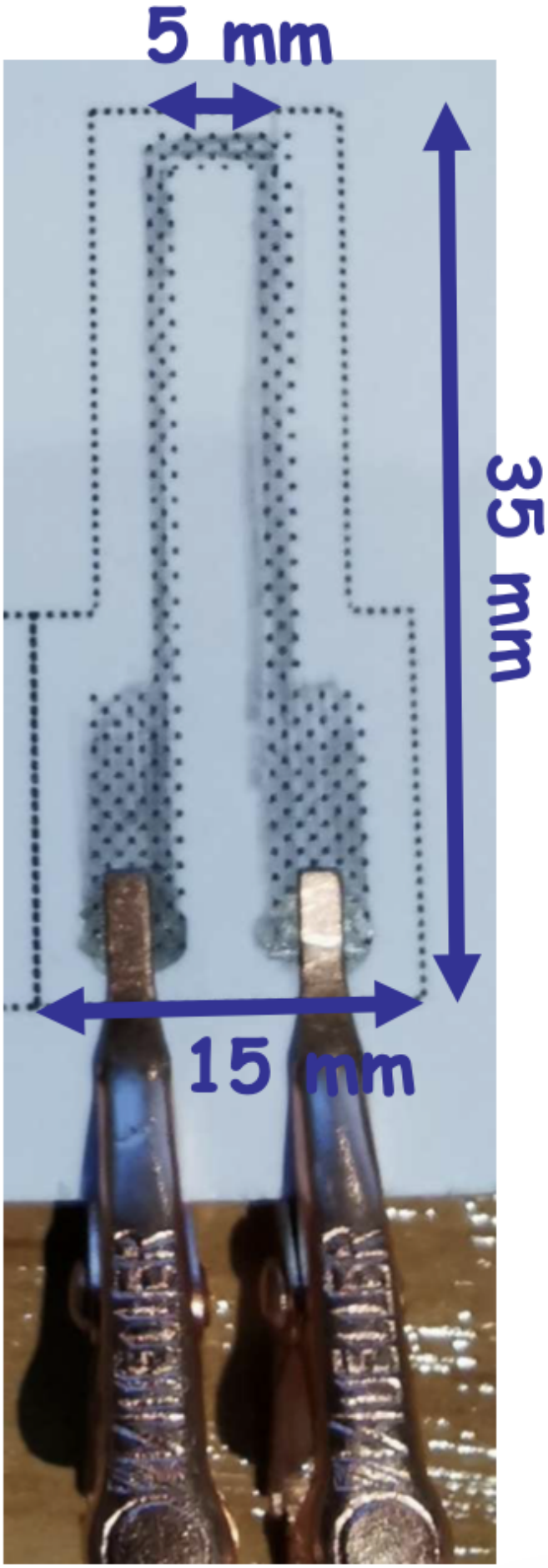

8 Réponse aux questions