INSTITUT NATIONAL DES SCIENCES APPLIQUÉES TOULOUSE

Phuc Loc VO
Minh Khue NGUYEN
Nguyen Gia Khanh TRUONG

CG-LKK26

Technical datasheet: Graphite Sensor

General features

- Low power consumption
- Easy to use
- Low cost
- Small size
- Flexible
- Bluetooth connection
- Environmentally friendly

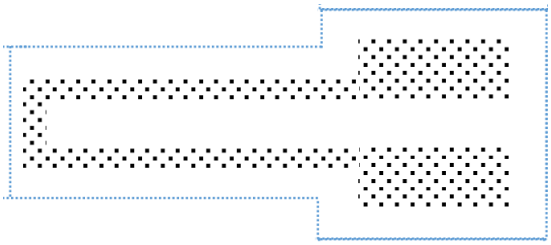

Description

The **CG-LKK26** is a flexible, low-cost gauge sensor made from graphite nanoparticles deposited using a standard pencil on paper. This sensor is designed to measure mechanical deformations such as bending and stretching.

The sensing element is created by drawing a U-shaped conductive pattern on a paper substrate, which enables the measurement of resistance variations induced by mechanical strain.

Pin Description and dimensions

Number of pins	Connection
1	Connected to the circuit power supply $+V_{CC} = 5V$
2	Connected to the conditioning circuit input

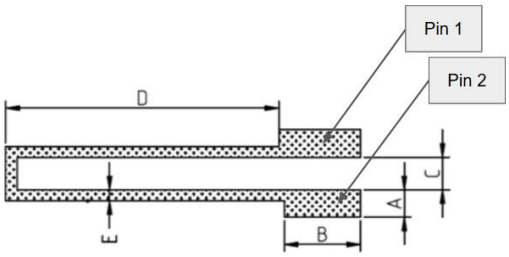

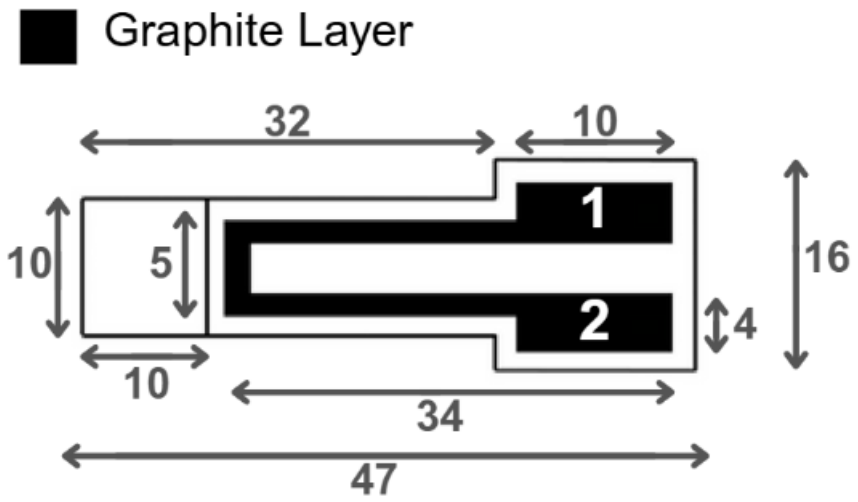

Lin CW, Zhao Z, Kim J, Huang J. Pencil drawn strain gauges and chemiresistors on paper. Sci Rep. 2014 Jan 22; 4:3812. doi: 10.1038/srep03812. PMID: 24448478; PMCID: PMC3898045

Specifications

Parameter	Value
Sensor type	Passive graphite strain gauge sensor
Measurand	Resistance
Output Signal Type	Analog
Power Supply	5V
Typical Response Time	< 100 ms
Substrate Material	- Cellulosic plant fibers (paper) - Pencil led (C, O, Mg, Al, Si)
Graphite Composition	Graphite nanoparticles deposited using a graphite pencil (HB,2B,4B,6B)
Paper Thickness	~0.2 mm
Mounting	Through hole fixed

Standard use condition

Condition	Typical value	Unit
Temperature	20±5	°C
Humidity	60±5	%

Phuc Loc VO
Minh Khue NGUYEN
Nguyen Gia Khanh TRUONG

Electrical characteristics

The resistance value of this sensor depends on the thickness of graphite layer and the type of pencil we used to create the sensor. The softer the pencil lead, the smaller the resistance since it contains more graphite particles than the hard pencil leads.

Pencil type	Unit	Measured R range	Typical R_0 rang
HB	MΩ	11.4 – 29.4	12.4 – 16.4
2B	MΩ	45.0 – 55.6	50.4 – 51.1
4B	MΩ		
6B	MΩ		

Test bench

We use a 3D model consisting of circular slots with different rayon R. By inserting the sensor into the slots, deformation is created depending on the orientation of the sensor (tension or compression). The deformation is inversely proportional to the radius of the circular slots, as follows:

$$\varepsilon = \frac{\sigma}{E} = \frac{e}{R} = \frac{0.2\ \text{mm}}{R}$$

Characteristic graphs

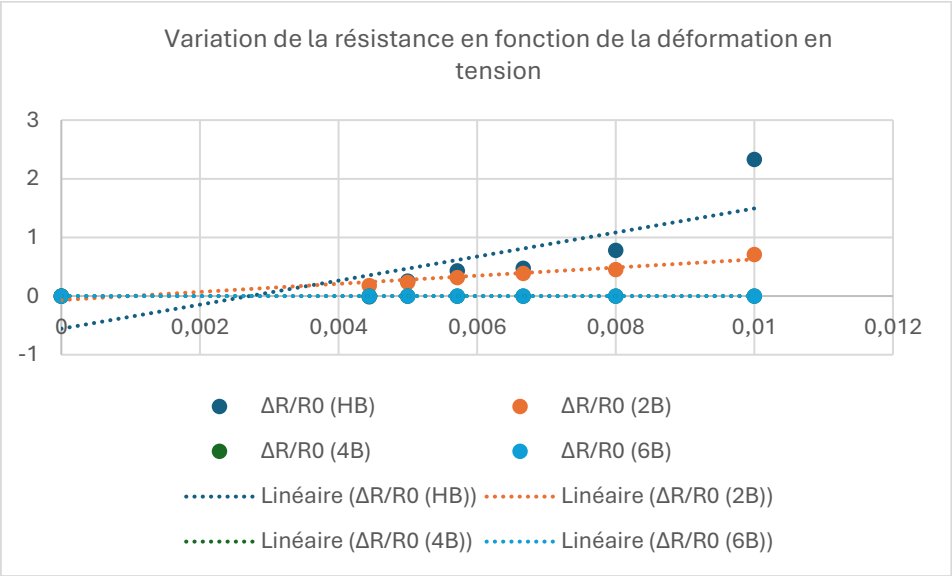

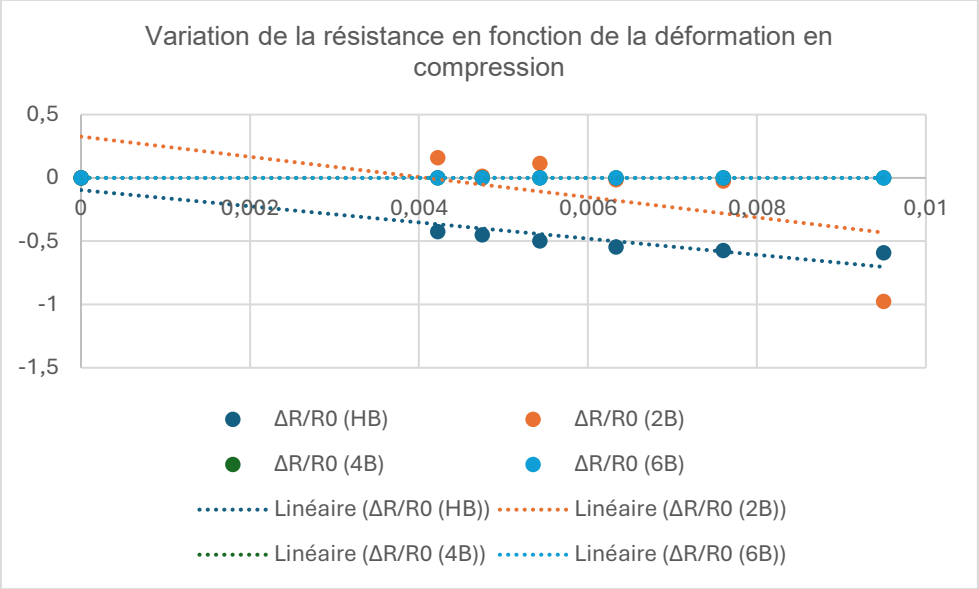

The graphs above show the relative change in the sensor's value corresponding to deformation in two modes: tension and compression. Linear regression lines passing through the origin have been drawn. These theoretical lines demonstrate that the $\Delta R/R_0$ value changes linearly with deformation.

Typical Applications

A typical application of the sensor is illustrated by an analog circuit using a transimpedance amplifier to convert the input current into a corresponding voltage output.

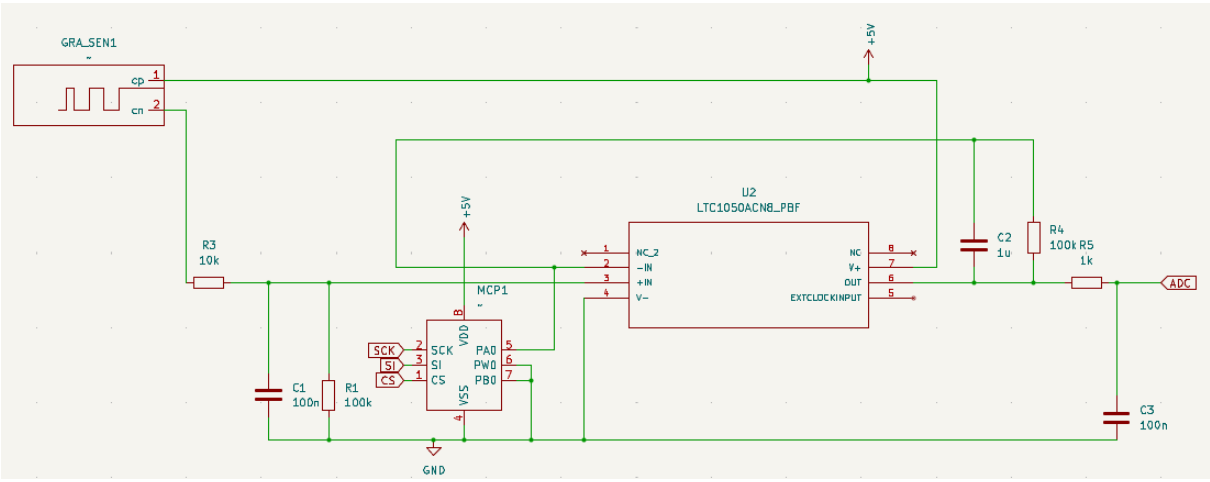

The circuit includes three filtering stages:

- At the input, a passive low-pass filter composed of R1 and C1, with a cutoff frequency of 16 Hz ($f_1 = \frac{1}{2\pi R_1 C_1} = 16$ Hz), is used to filter current noise from the input signal.

Phuc Loc VO
Minh Khue NGUYEN
Nguyen Gia Khanh TRUONG

- An active low-pass filter composed of R3 and C4, with a cutoff frequency of 1.6 Hz ($f_2 = \frac{1}{2\pi R_3 C_4} = 1.6$ Hz), is used to filter out the 50 Hz noise component resulting from coupling with the electrical mains.
- At the output, a final filter composed of R6 and C2, with a cutoff frequency of 1.6 kHz ($f_3 = \frac{1}{2\pi R_6 C_2} = 1.6$ kHz), is used to remove noise generated during processing, such as power supply and clock noise. The resistor R5 is placed upstream of the operational amplifier to protect it against electrostatic discharge. For our simulation, we included the capacitor C3 to filter power supply noise. Finally, the resistor R2 is replaced by a variable resistor (a digital potentiometer), allowing us to adjust the gain of the operational amplifier according to our needs.

Materials used:

$R_1 = R_3 = 100$ kΩ, $R_5 = 10$ kΩ, $R_6 = 1$ kΩ, $C_1 = C_2 = 100$ nF, $C_4 = 1$ µF, LTC1050

The resistance obtained from graphite sensor depends on the potentiometer's resistance:

$$R_{gs} = \left(1 + \frac{R_3}{R_{pot}}\right) \times R_1 \times \frac{V_{CC}}{V_{ADC}} - R_1 - R_5$$

Simulation électronique du capteur

Fonctionnalité de condition nominale :

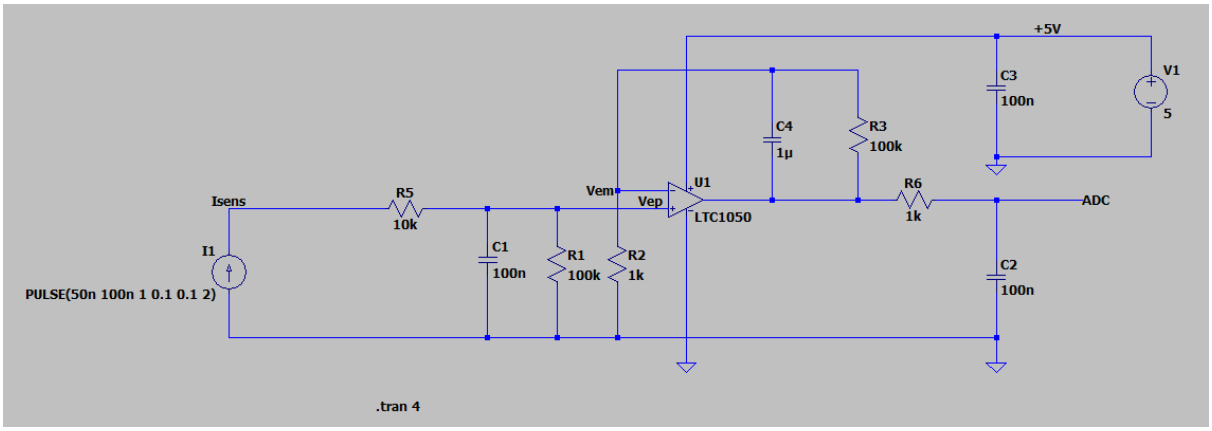

Le courant d'entrée I_{sens} varie entre 50 nA et 100 nA, ce qui entraîne une variation de la tension V_{ep} appliquée à l'entrée non-inverseur V_+ du LTC1050, entre 5 mV et 10 mV.

Le gain de l'amplificateur du LTC1050 est défini par : $G = 1 + R_3/R_2 = 101$.

Par conséquent, la valeur de la tension de sortie du LTC1050 est variée entre 0.5 V et 1 V.

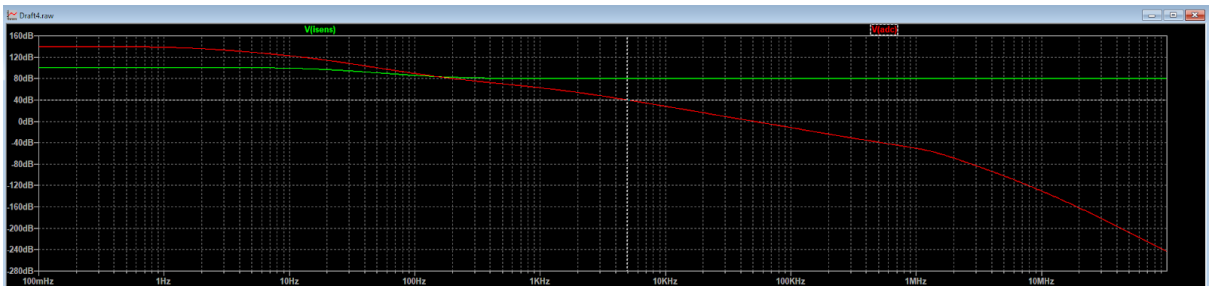

Au départ, le signal exprimé en décibels est de 140 dB, ce qui correspond à 20log (V_{ADC}/I_{sens}).

Le microcontrôleur utilisé est un Arduino UNO, basé sur un microcontrôleur AVR avec une fréquence d'échantillonnage maximale f_{ech} de 200 kHz. Comme la conversion analogique-numérique se fait sur 13 bits, la fréquence d'échantillonnage réelle est limitée à 15.4 kHz.

D'après le théorème de Nyquist, la fréquence maximale du signal que l'on peut correctement numériser doit donc être inférieure à la moitié de cette valeur : $f_{signal} < f_{ech}/2 = 7.7$ kHz.