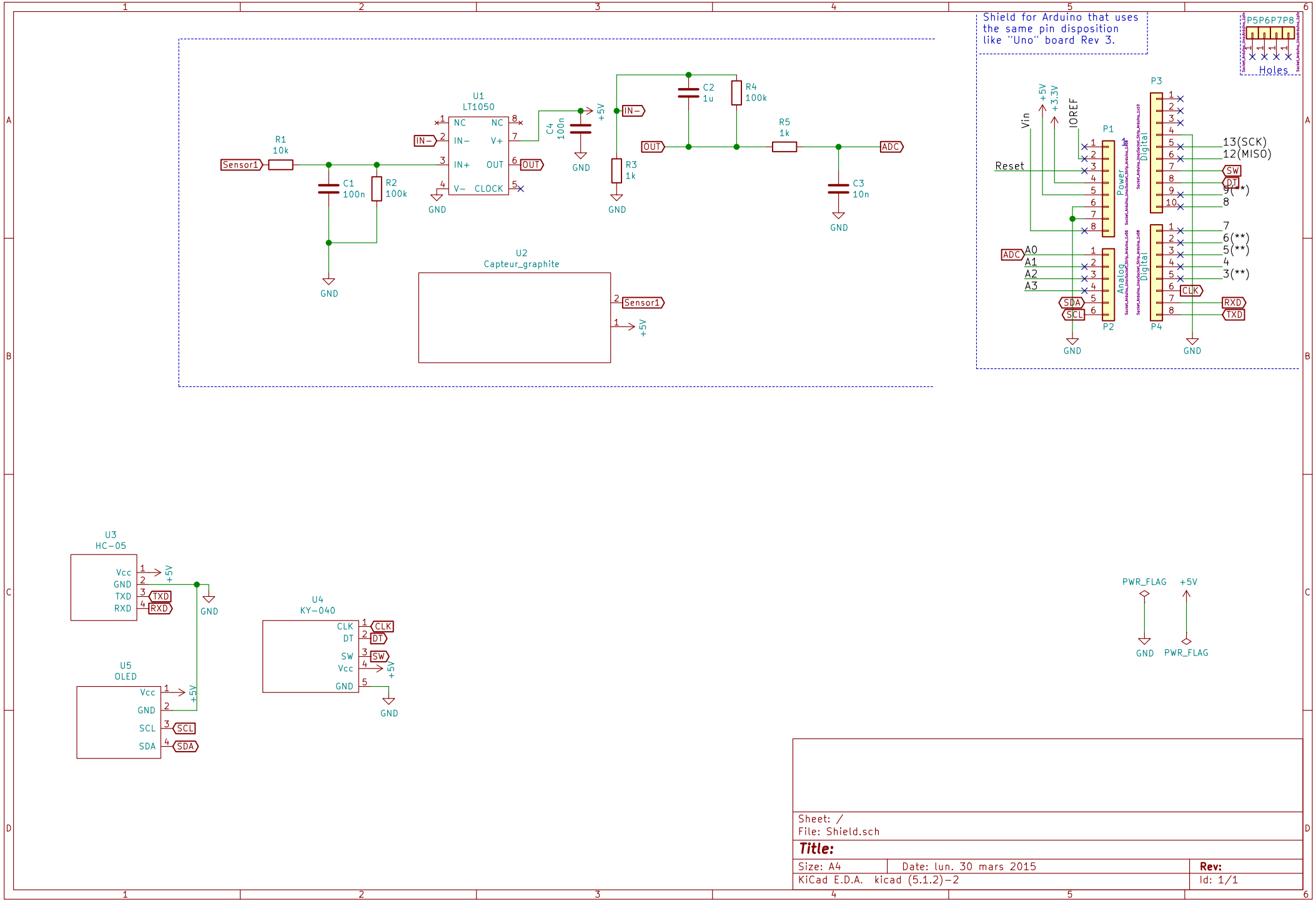
Shield for Arduino that uses the same pin disposition like "Uno" board Rev 3.
P5P6P7P8
Holes
U1
LT1050
NC
IN−
IN+
V−
CLOCK
V+
OUT
R1
10k
R2
100k
C1
100n
C4
100n
C2
1u
R4
100k
R3
1k
R5
1k
C3
10n
Sensor1
ADC
IN−
OUT
GND
+5V
U2
Capteur_graphite
P1
P2
P3
P4
Power
Analog
Digital
Vin
IOREF
+5V
+3.3V
Reset
A0
A1
A2
A3
SDA
SCL
13(SCK)
12(MISO)
SW
DT
9(**)
8
7
6(**)
5(**)
4
3(**)
CLK
RXD
TXD
U3
HC−05
Vcc
GND
TXD
RXD
U4
KY−040
CLK
DT
SW
Vcc
GND
U5
OLED
Vcc
GND
SCL
SDA
PWR_FLAG
+5V
GND
Sheet: /
File: Shield.sch
Title:
Size: A4
Date: lun. 30 mars 2015
Rev:
KiCad E.D.A. kicad (5.1.2)−2
Id: 1/1