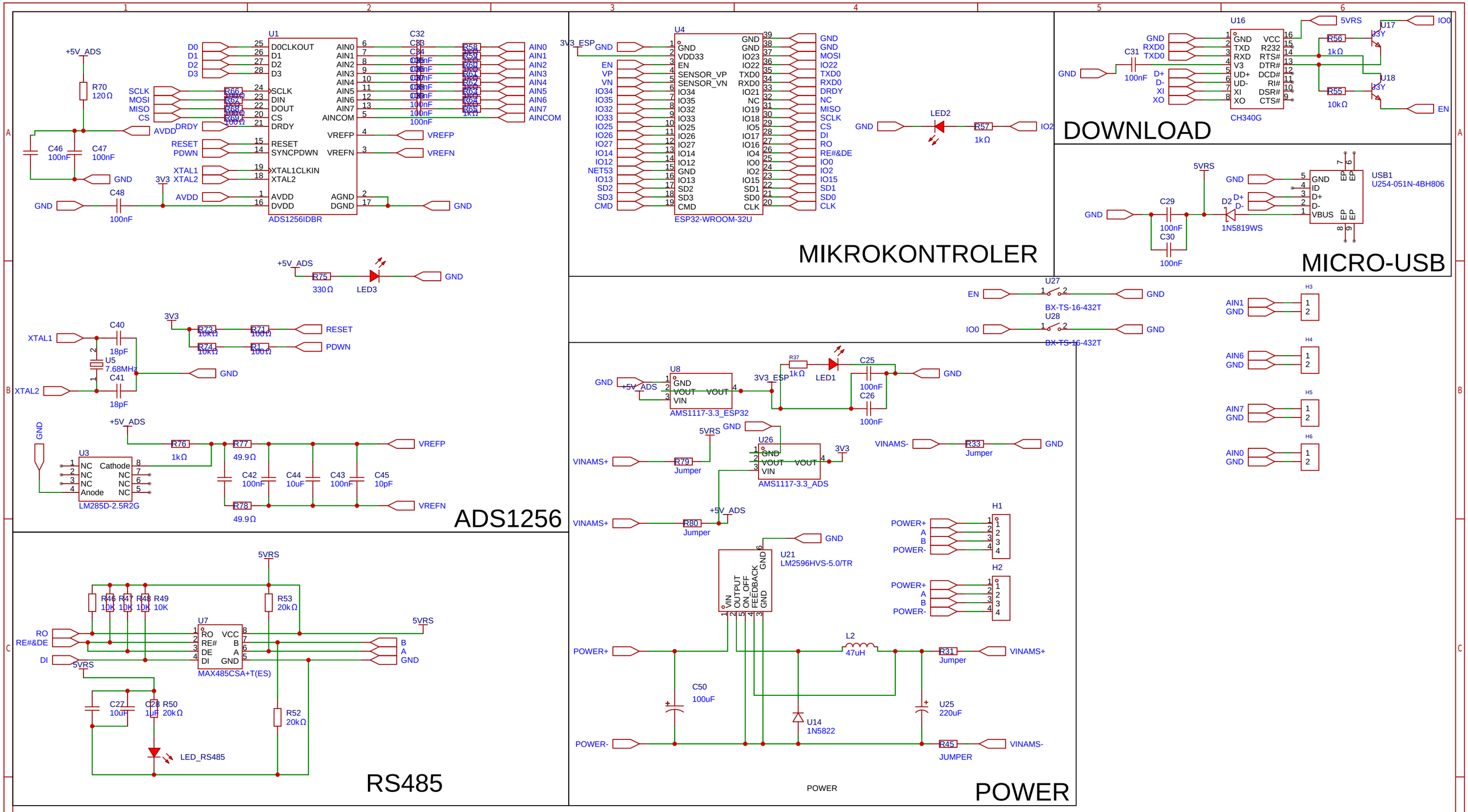

Schematic	Schematic1_3	Create at	2025-01-20
		Update at	2025-01-20
Board	Part3	Page	P1
Drawn	ModulSeismicStreamer		
Reviewed			
	Version	Size	Page 1 Total 1
EasyEDA	V1.0	A4	EasyEDA.com