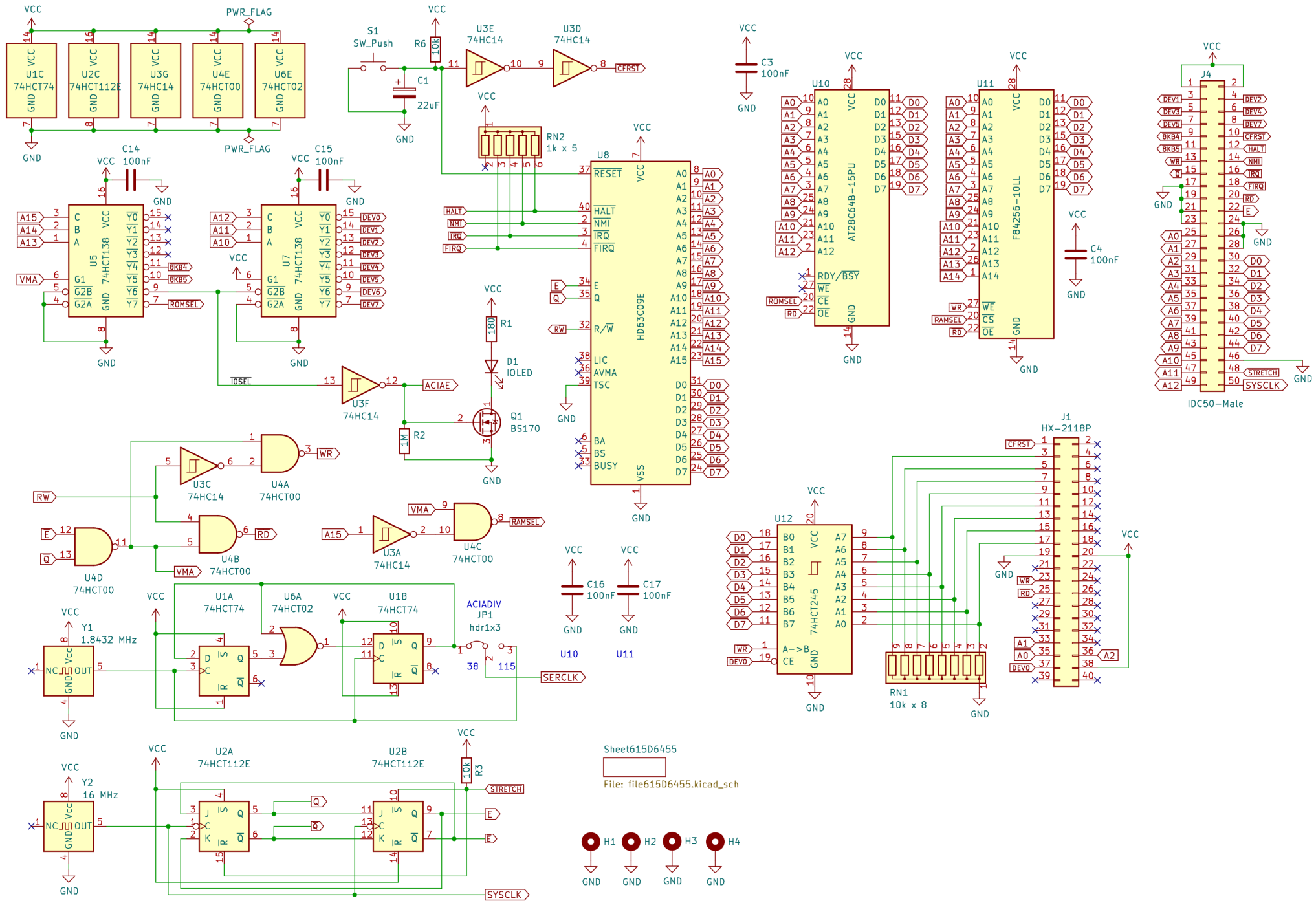
U1C 74HCT74
U2C 74HCT112E
U3G 74HC14
U4E 74HCT00
U6E 74HCT02
PWR_FLAG
S1 SW_Push
R6 10k
C1 22uF
U3E 74HC14
U3D 74HC14
CFRST
RN2 1k x 5
C3 100nF
U10 AT28C64B-15PU
U11 F84256-10LL
C4 100nF
J4
IDC50-Male
C14 100nF
C15 100nF
U5 74HCT138
U7 74HCT138
U8 HD63C09E
R1 180
D1 IOLED
Q1 BS170
R2 1M
U3F 74HC14
ACIAE
U3C 74HC14
U4A 74HCT00
U4B 74HCT00
U4D 74HCT00
U3A 74HC14
U4C 74HCT00
RAMSEL
U12 74HCT245
RN1 10k x 8
J1 HX-2118P
C16 100nF
C17 100nF
U10
U11
Y1 1.8432 MHz
U1A 74HCT74
U6A 74HCT02
U1B 74HCT74
ACIADIV
JP1
hdr1x3
38
115
SERCLK
Y2 16 MHz
U2A 74HCT112E
U2B 74HCT112E
R3 10k
STRETCH
SYSCLK
Sheet615D6455
File: file615D6455.kicad_sch
H1
H2
H3
H4

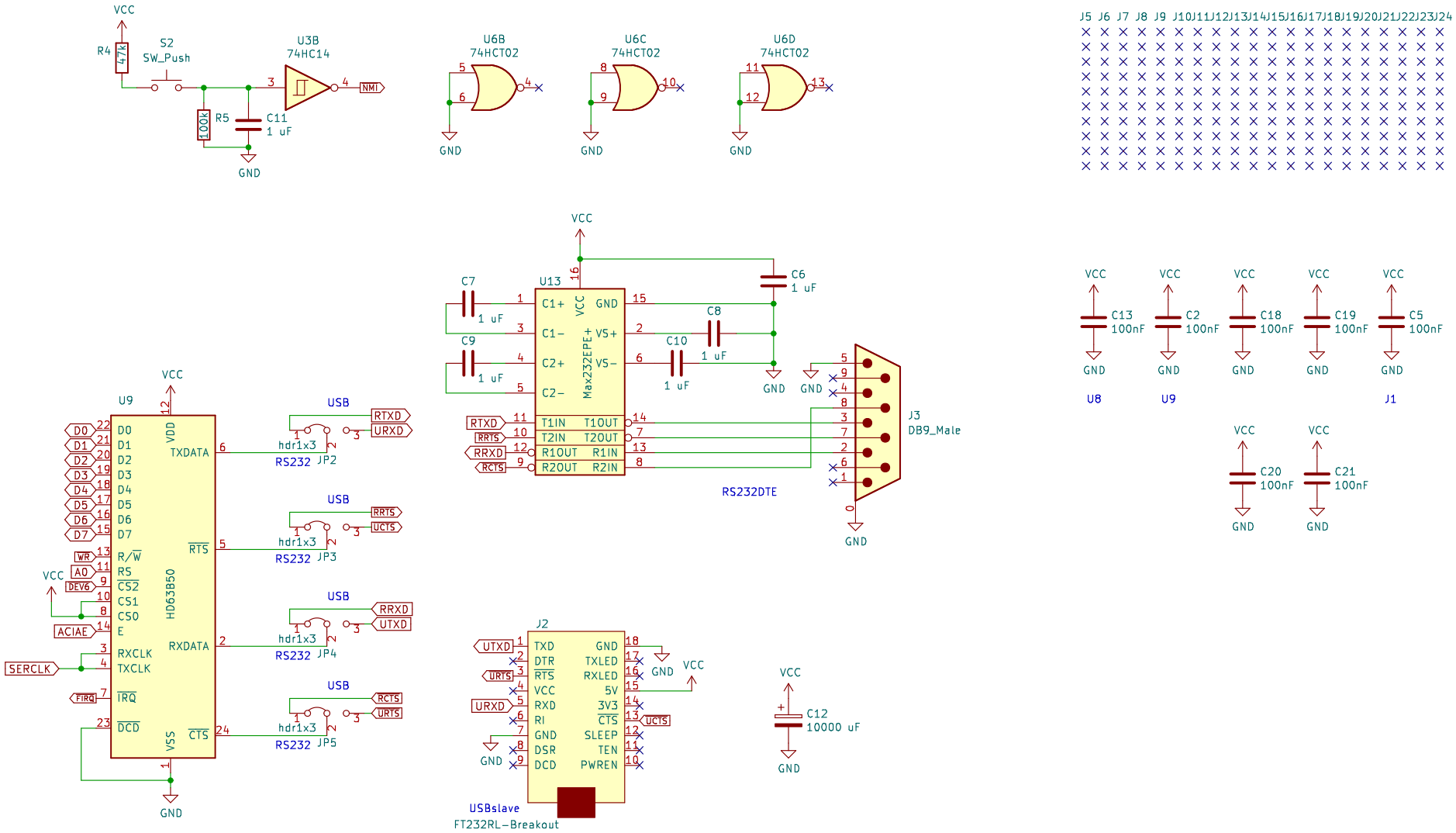
VCC
R4
47k
S2
SW_Push
R5
100k
C11
1 uF
GND
U3B
74HC14
NMI
U6B
74HCT02
U6C
74HCT02
U6D
74HCT02
J5 J6 J7 J8 J9 J10 J11 J12 J13 J14 J15 J16 J17 J18 J19 J20 J21 J22 J23 J24
C13
100nF
U8
C2
100nF
U9
C18
100nF
C19
100nF
C5
100nF
J1
C20
100nF
C21
100nF
U13
Max232EPE+
C1+
C1−
C2+
C2−
VCC
GND
VS+
VS−
T1IN
T2IN
R1OUT
R2OUT
T1OUT
T2OUT
R1IN
R2IN
C7
1 uF
C9
1 uF
C8
1 uF
C10
1 uF
C6
1 uF
RTXD
RRTS
RRXD
RCTS
J3
DB9_Male
RS232DTE
U9
HD63B50
D0
D1
D2
D3
D4
D5
D6
D7
R/W
RS
CS2
CS1
CS0
E
RXCLK
TXCLK
IRQ
DCD
TXDATA
RTS
RXDATA
CTS
VDD
VSS
WR
A0
DEV6
ACIAE
SERCLK
FIRQ
USB
hdr1x3
RS232
JP2
JP3
JP4
JP5
RTXD
URXD
RRTS
UCTS
RRXD
UTXD
RCTS
URTS
J2
TXD
DTR
RTS
VCC
RXD
RI
GND
DSR
DCD
TXLED
RXLED
5V
3V3
CTS
SLEEP
TEN
PWREN
UTXD
URTS
URXD
UCTS
USBslave
FT232RL−Breakout
C12
10000 uF