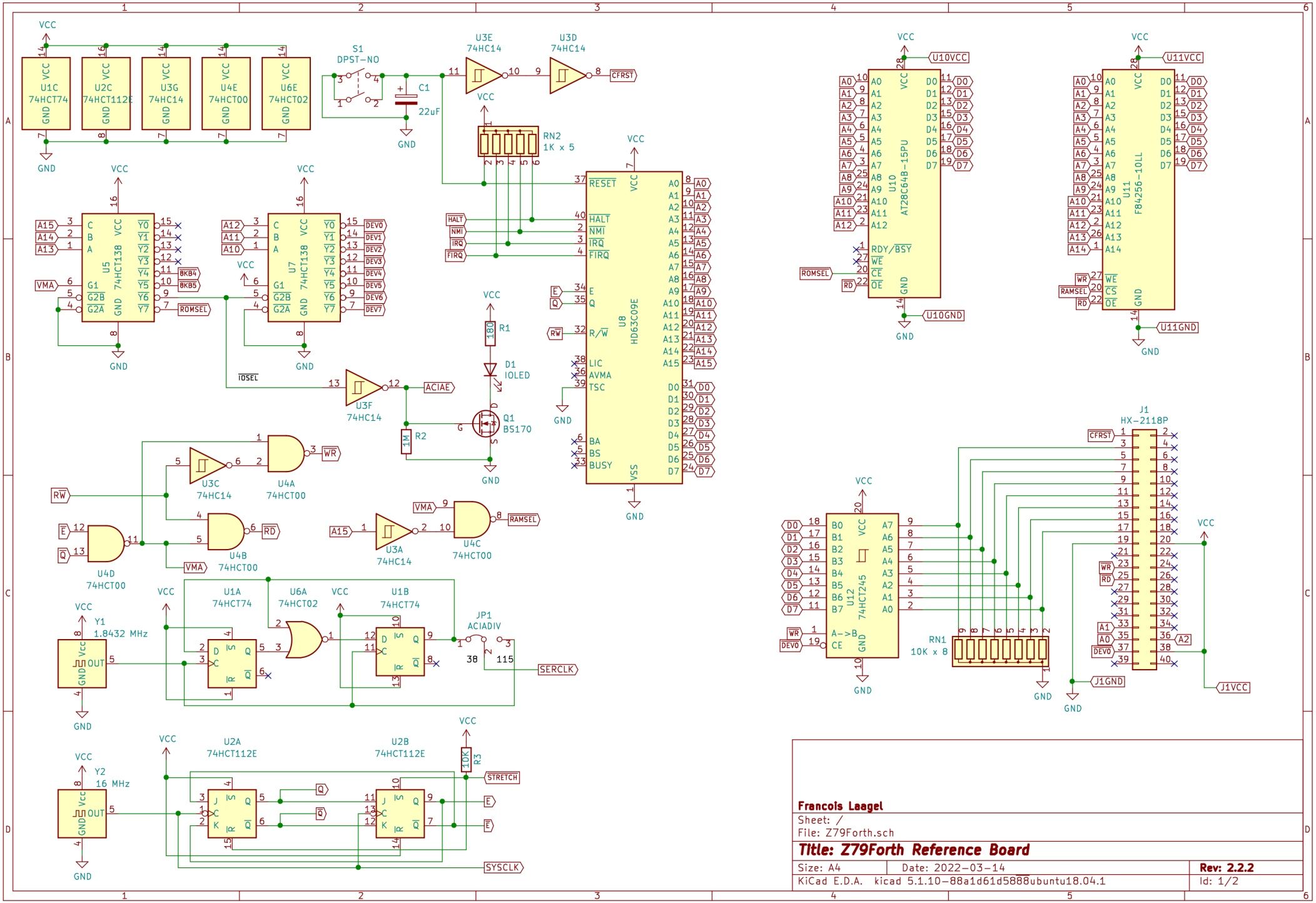

Francois Laagel

Sheet: /

File: Z79Forth.sch

Title: Z79Forth Reference Board

Size: A4	Date: 2022-03-14	**Rev: 2.2.2**
KiCad E.D.A. kicad 5.1.10-88a1d61d5888ubuntu18.04.1		Id: 1/2

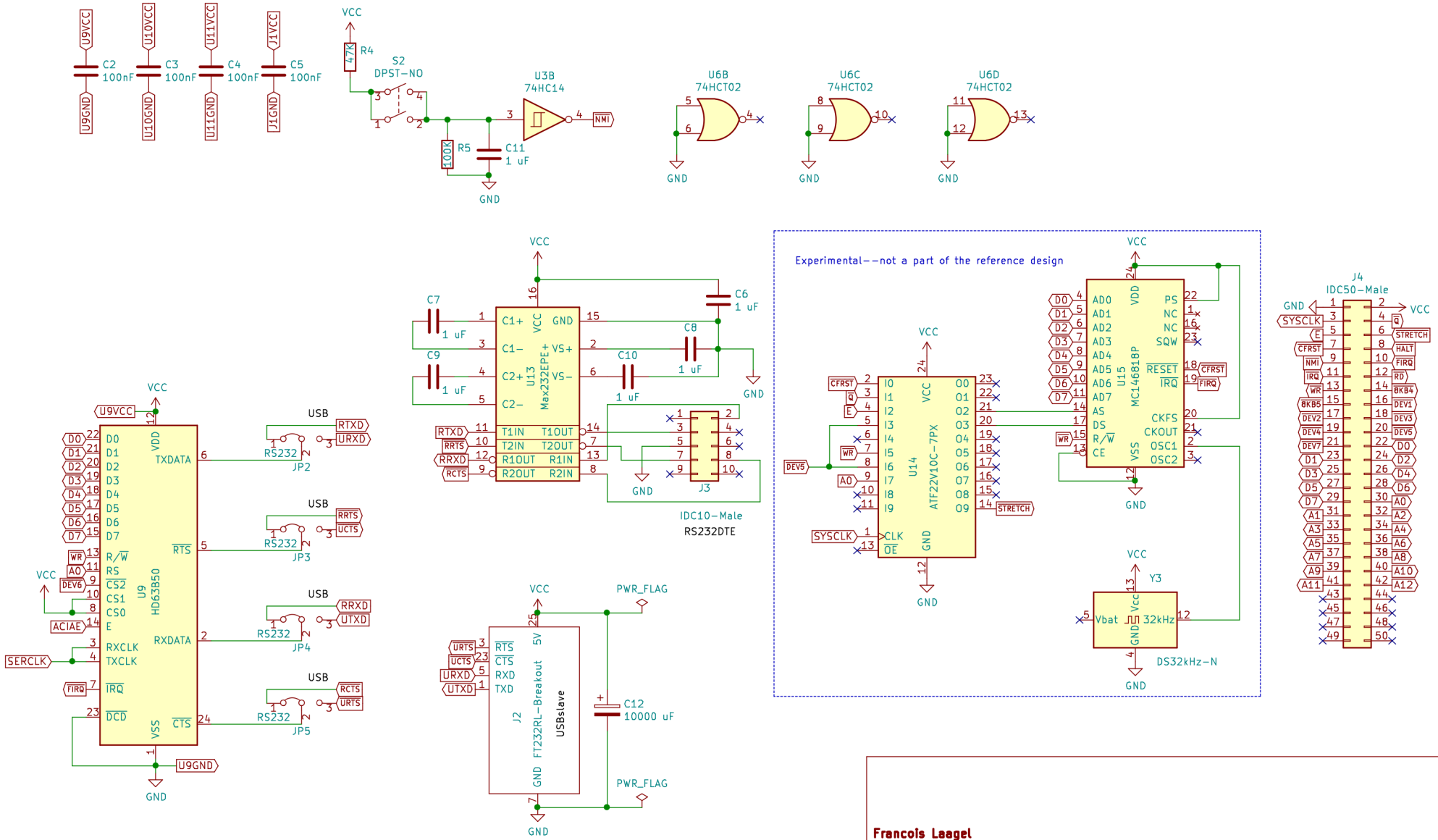

Francois Laagel

Sheet: /Sheet615D6455/

File: file615D6455.sch

Title: Z79Forth Reference Board

Size: A4	Date: 2022-03-14	**Rev: 2.2.2**
KiCad E.D.A. kicad 5.1.10-88a1d61d5888ubuntu18.04.1		Id: 2/2