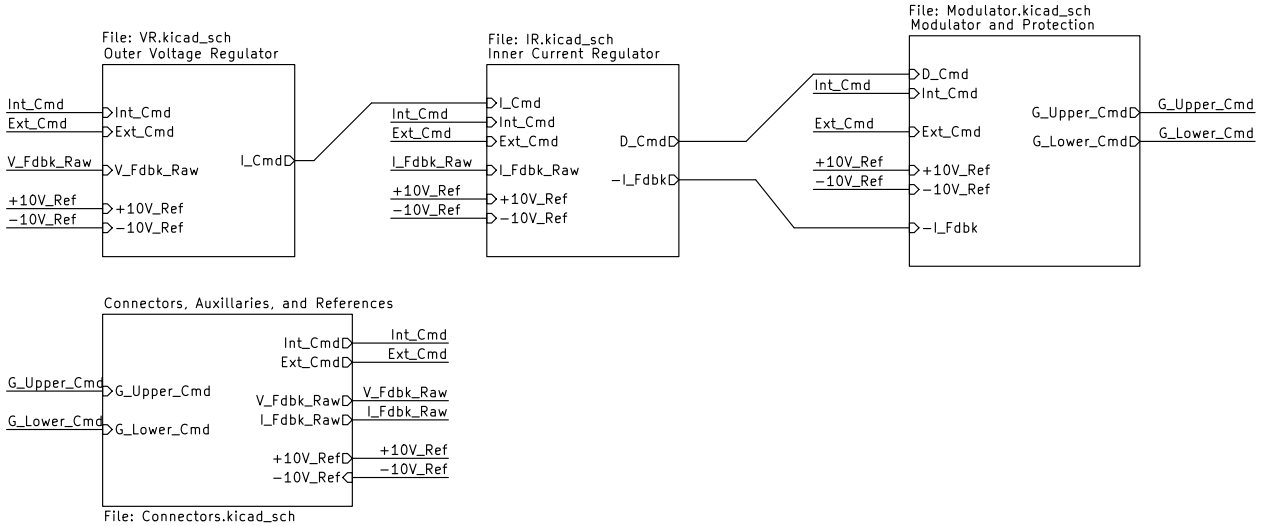

Sheet: /
File: HB_Drive_V1.kicad_sch

Title:

Size: A4	Date:	**Rev:**
KiCad E.D.A. 10.0.5		Id: 1/8

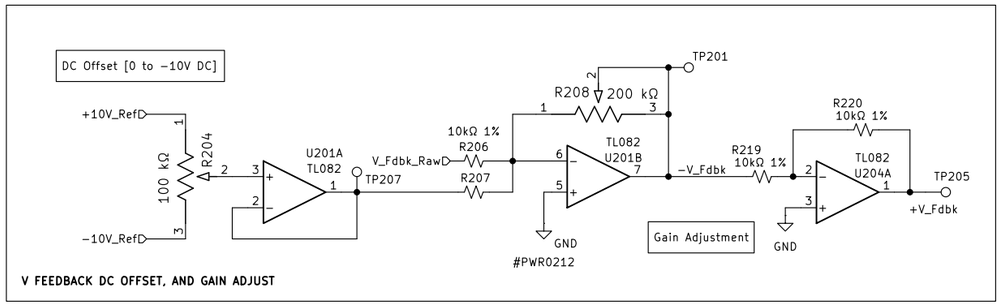

V FEEDBACK DC OFFSET, AND GAIN ADJUST

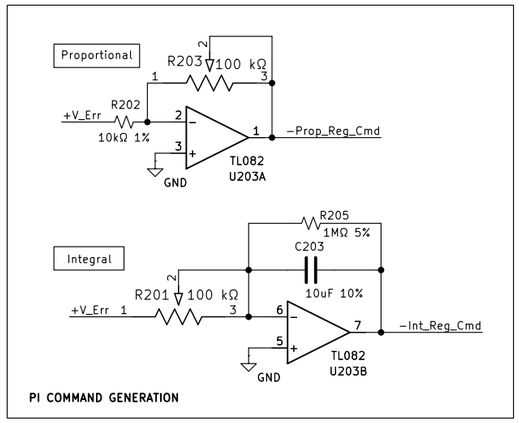

PI COMMAND GENERATION

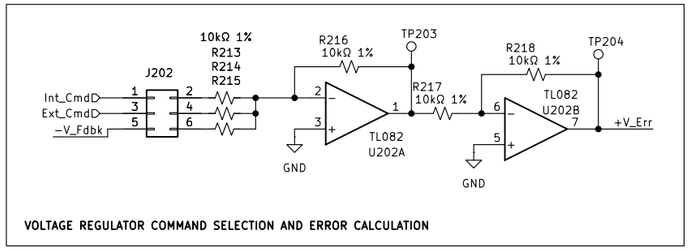

VOLTAGE REGULATOR COMMAND SELECTION AND ERROR CALCULATION

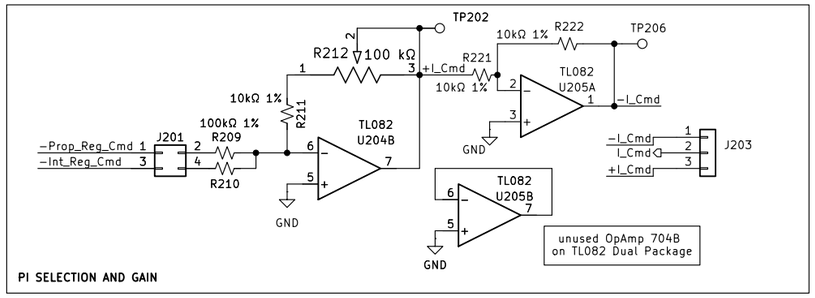

PI SELECTION AND GAIN

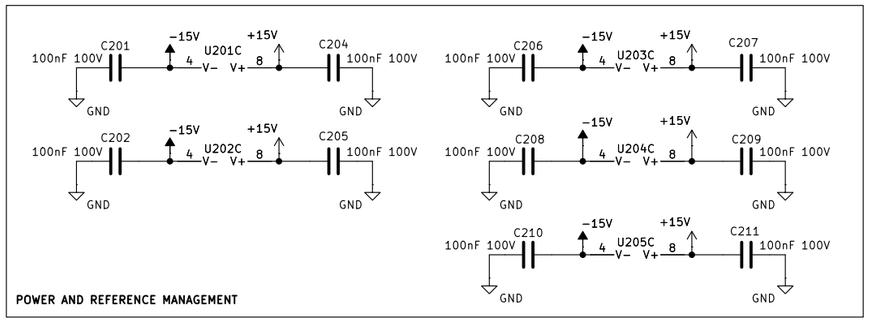

POWER AND REFERENCE MANAGEMENT

Sheet: /Outer Voltage Regulator/
File: VR.kicad_sch

Title:

Size: A3	Date:	Rev:
KiCad E.D.A. 10.0.5		Id: 2/8

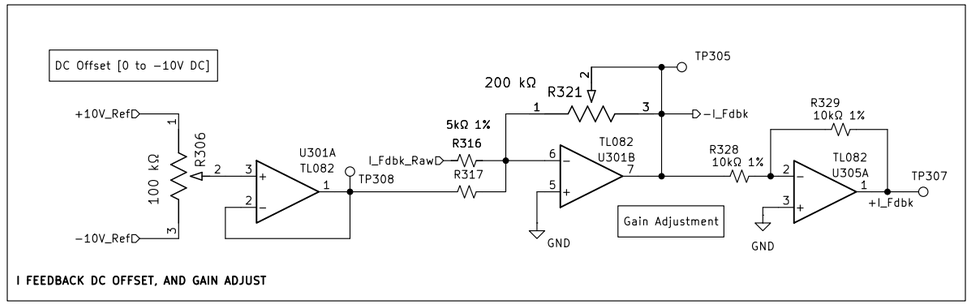

I FEEDBACK DC OFFSET, AND GAIN ADJUST

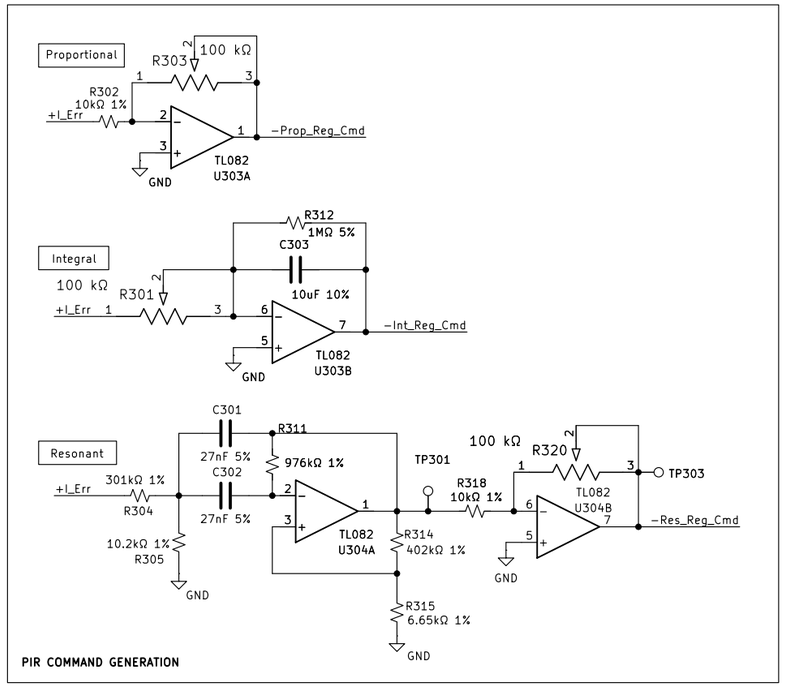

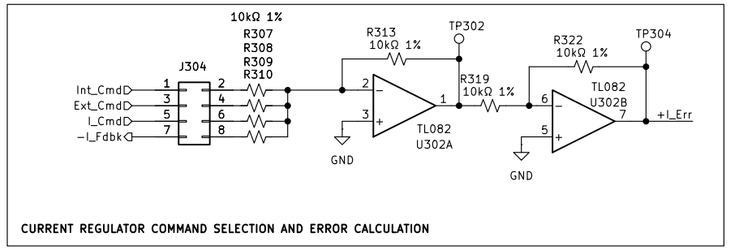

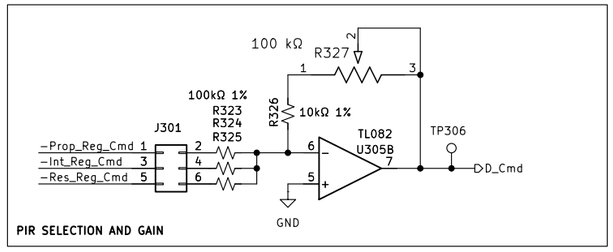

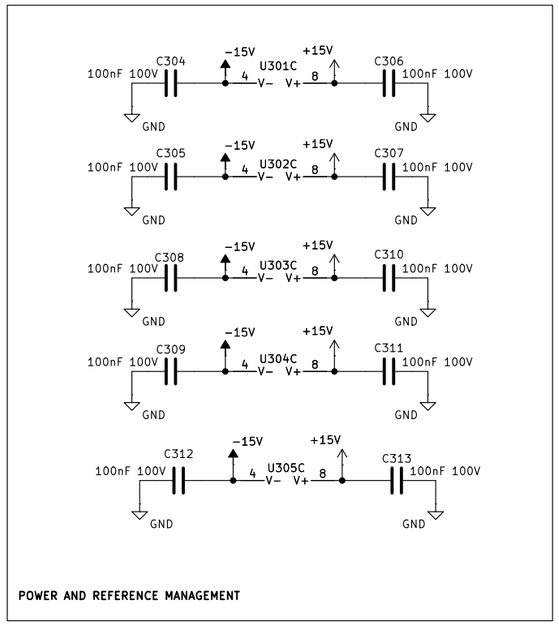

Sheet: /Inner Current Regulator/
File: IR.kicad_sch

Title:

Size: A3	Date:	Rev:
KiCad E.D.A. 10.0.5		Id: 3/8

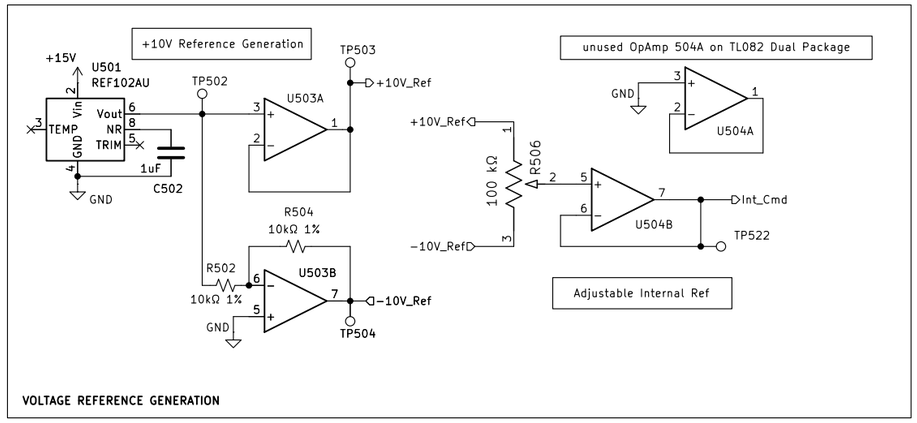

VOLTAGE REFERENCE GENERATION

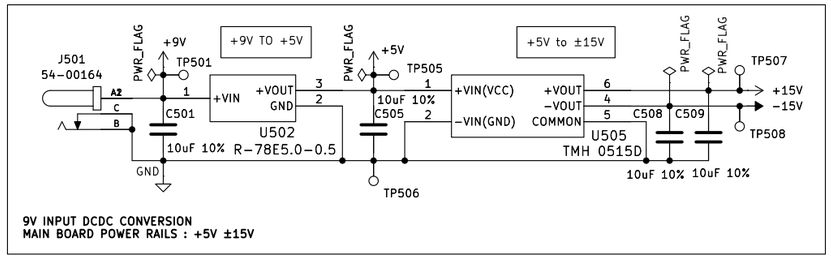

9V INPUT DCDC CONVERSION
MAIN BOARD POWER RAILS : +5V ±15V

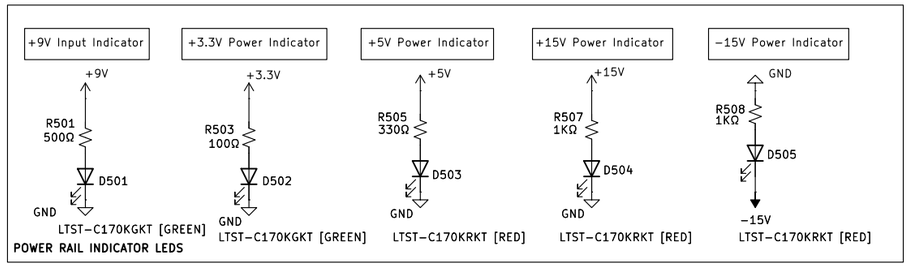

POWER RAIL INDICATOR LEDS

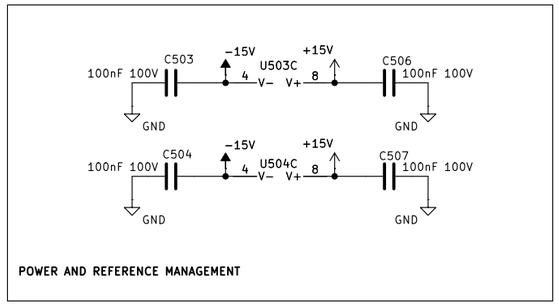

POWER AND REFERENCE MANAGEMENT

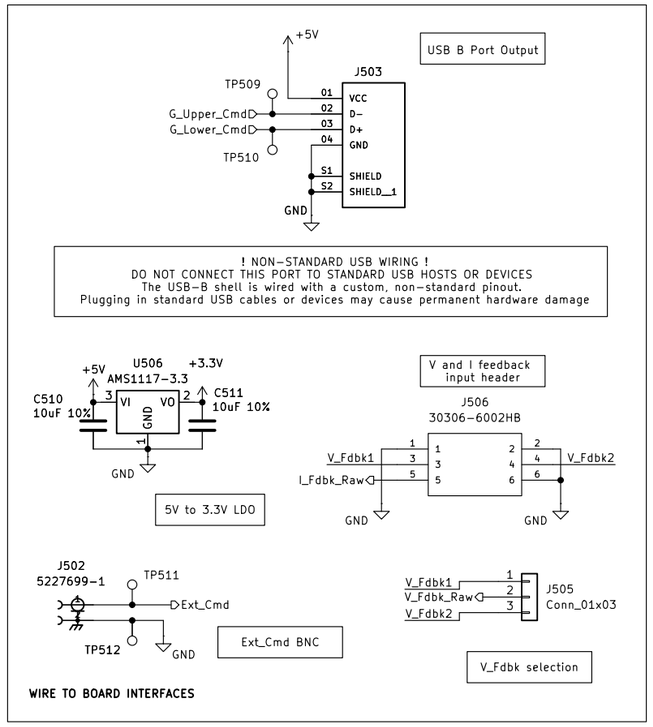

WIRE TO BOARD INTERFACES

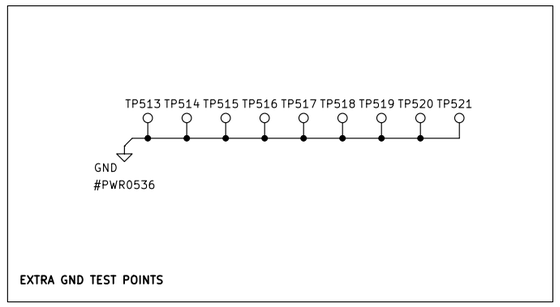

EXTRA GND TEST POINTS

Sheet: /Connectors, Auxillaries, and References/
File: Connectors.kicad_sch

Title:

Size: A3	Date:	Rev:
KiCad E.D.A. 10.0.5		Id: 5/8

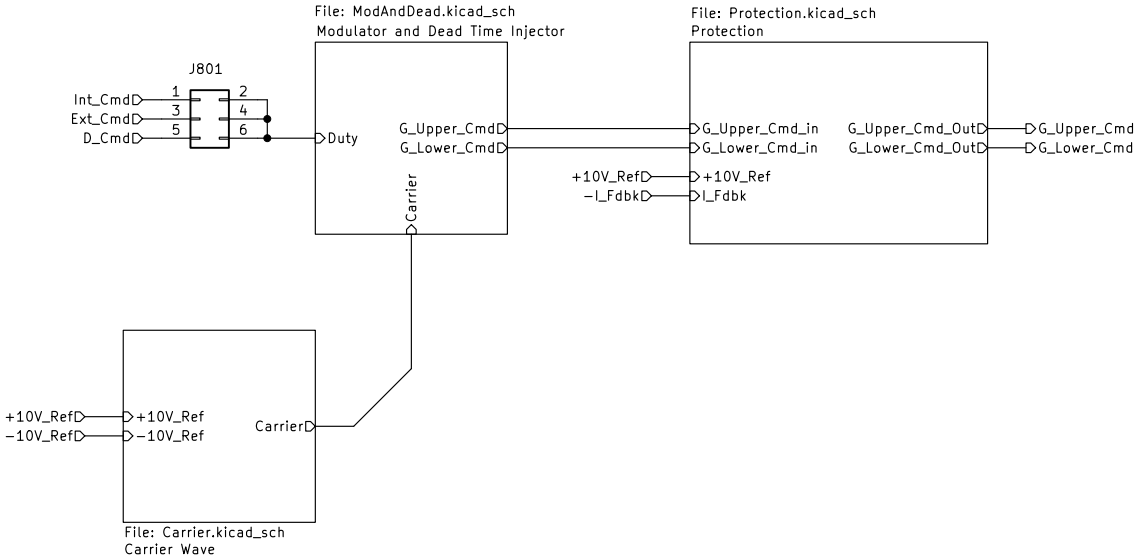

Sheet: /Modulator and Protection/
File: Modulator.kicad_sch

Title:

Size: A4	Date:	**Rev:**
KiCad E.D.A. 10.0.5		Id: 8/8

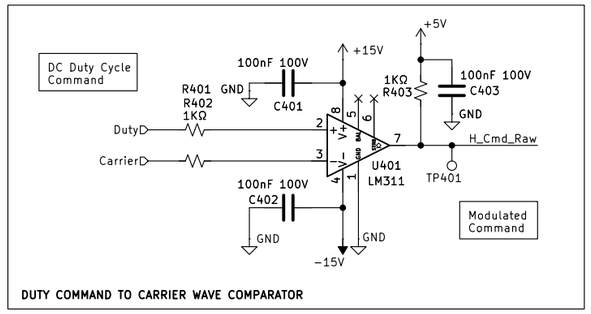

DUTY COMMAND TO CARRIER WAVE COMPARATOR

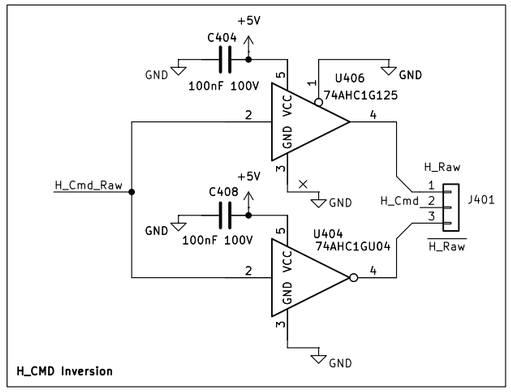

H_CMD Inversion

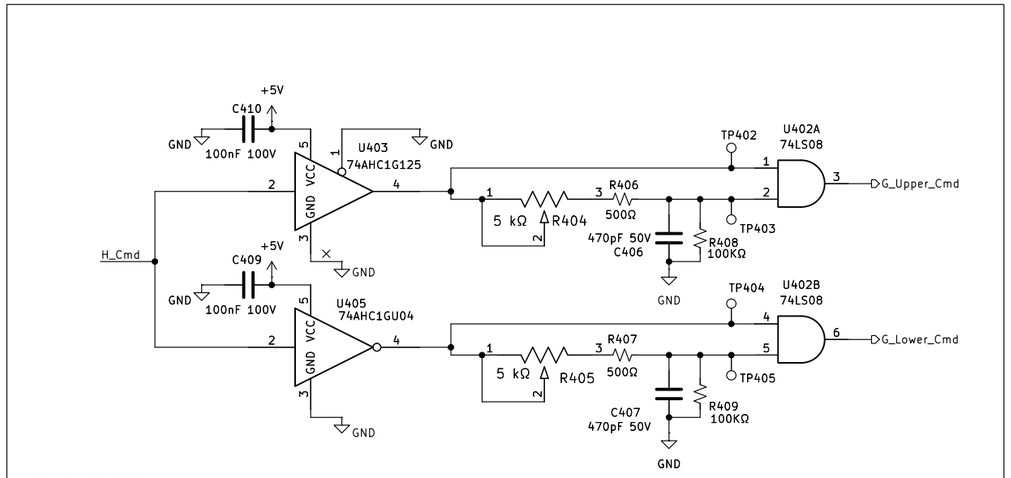

DEAD TIME INJECTION

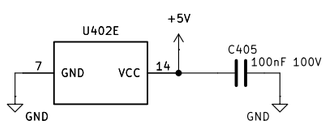

POWER AND REFERENCE MANAGEMENT

Sheet: /Modulator and Protection/Modulator and Dead Time Injector/
File: ModAndDead.kicad_sch

Title:

Size: A3	Date:	Rev:
KiCad E.D.A. 10.0.5		Id: 4/8

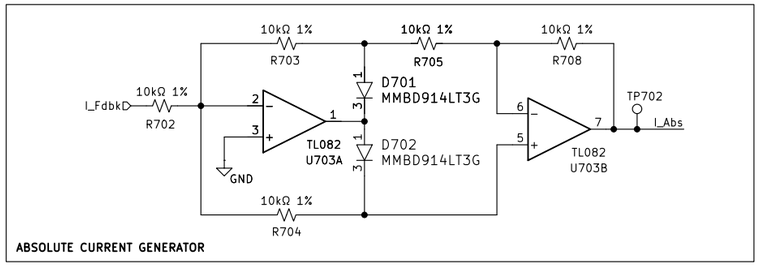

ABSOLUTE CURRENT GENERATOR

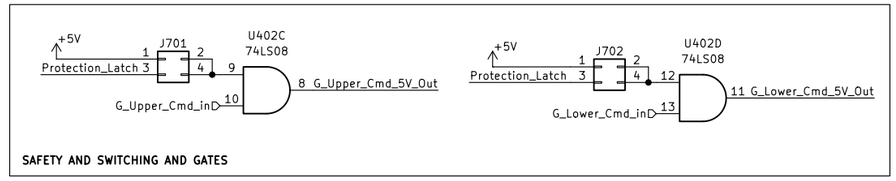

SAFETY AND SWITCHING AND GATES

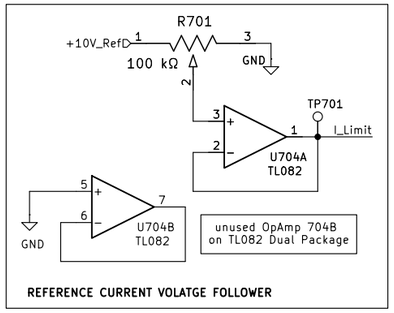

REFERENCE CURRENT VOLATGE FOLLOWER

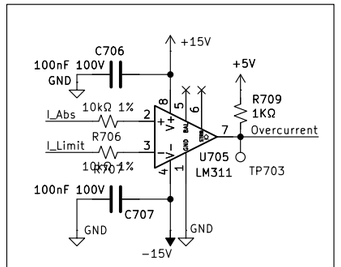

REFERENCE TO ABSOLUTE CURRENT COMPARATOR

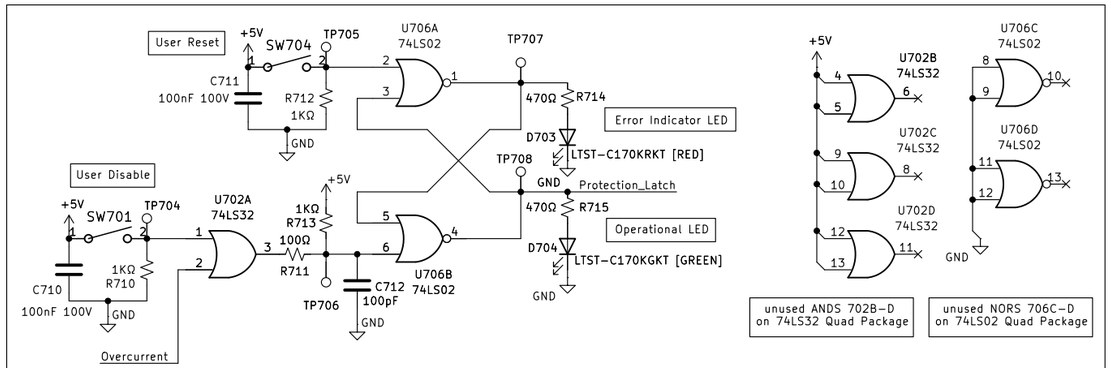

CURRENT PROTECTION FLIP_FLOP AND USER MANUAL RESET

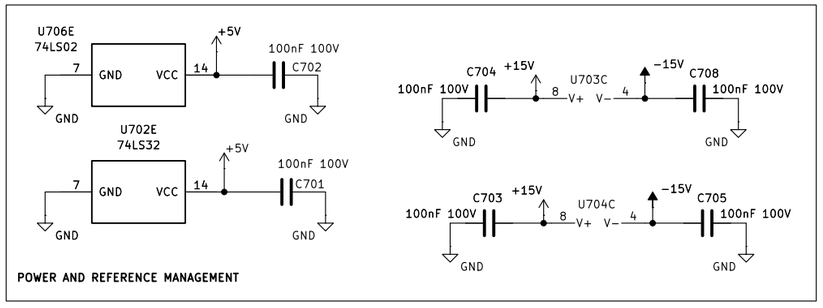

POWER AND REFERENCE MANAGEMENT

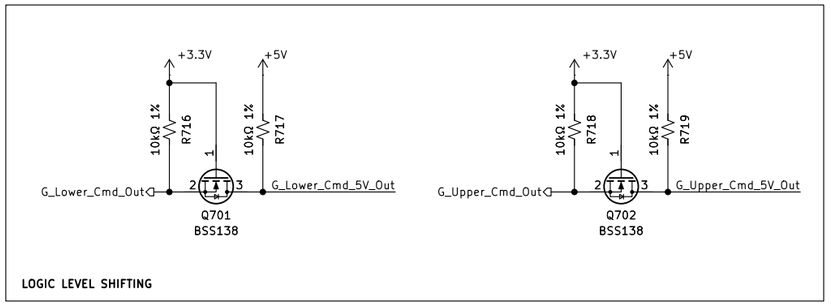

LOGIC LEVEL SHIFTING

Sheet: /Modulator and Protection/Protection/
File: Protection.kicad_sch

Title:

Size: A3	Date:	Rev:
KiCad E.D.A. 10.0.5		Id: 7/8

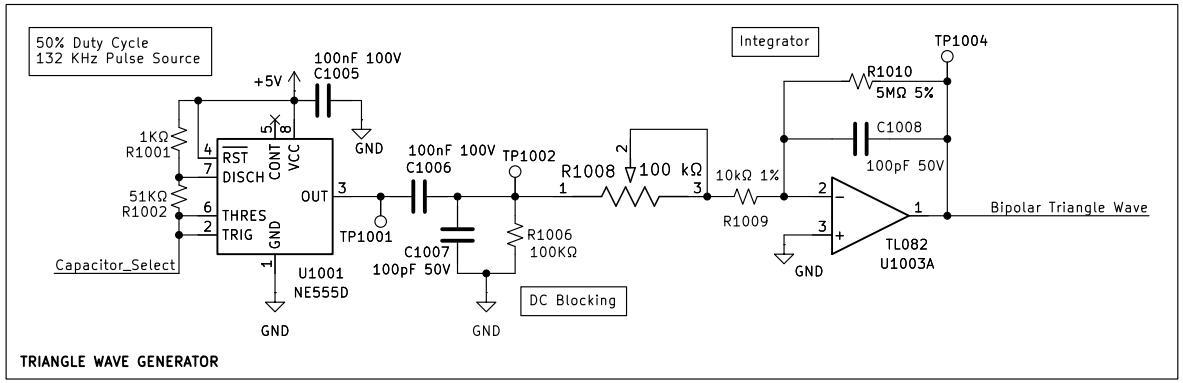

TRIANGLE WAVE GENERATOR

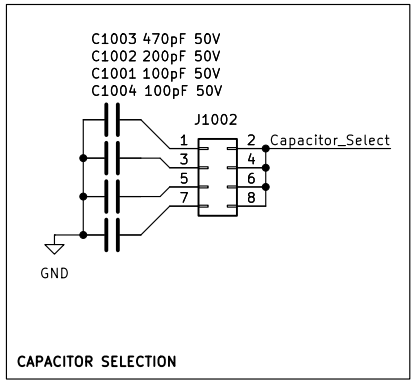

CAPACITOR SELECTION

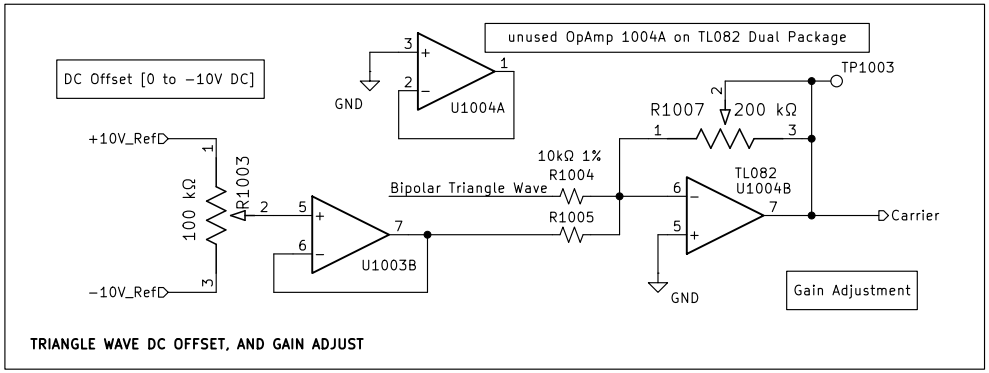

TRIANGLE WAVE DC OFFSET, AND GAIN ADJUST

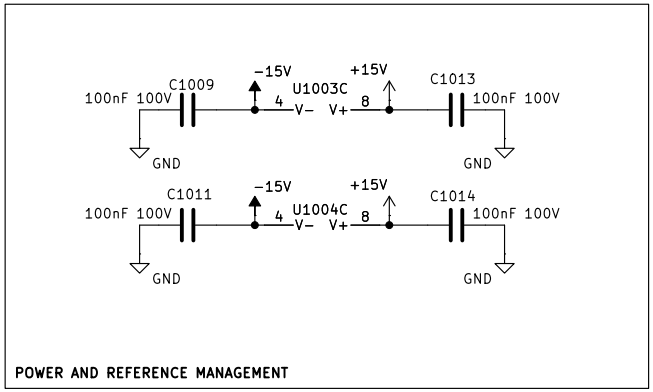

POWER AND REFERENCE MANAGEMENT

Sheet: /Modulator and Protection/Carrier Wave/
File: Carrier.kicad_sch

Title:

Size: A4	Date:	Rev:
KiCad E.D.A. 10.0.5		Id: 10/8