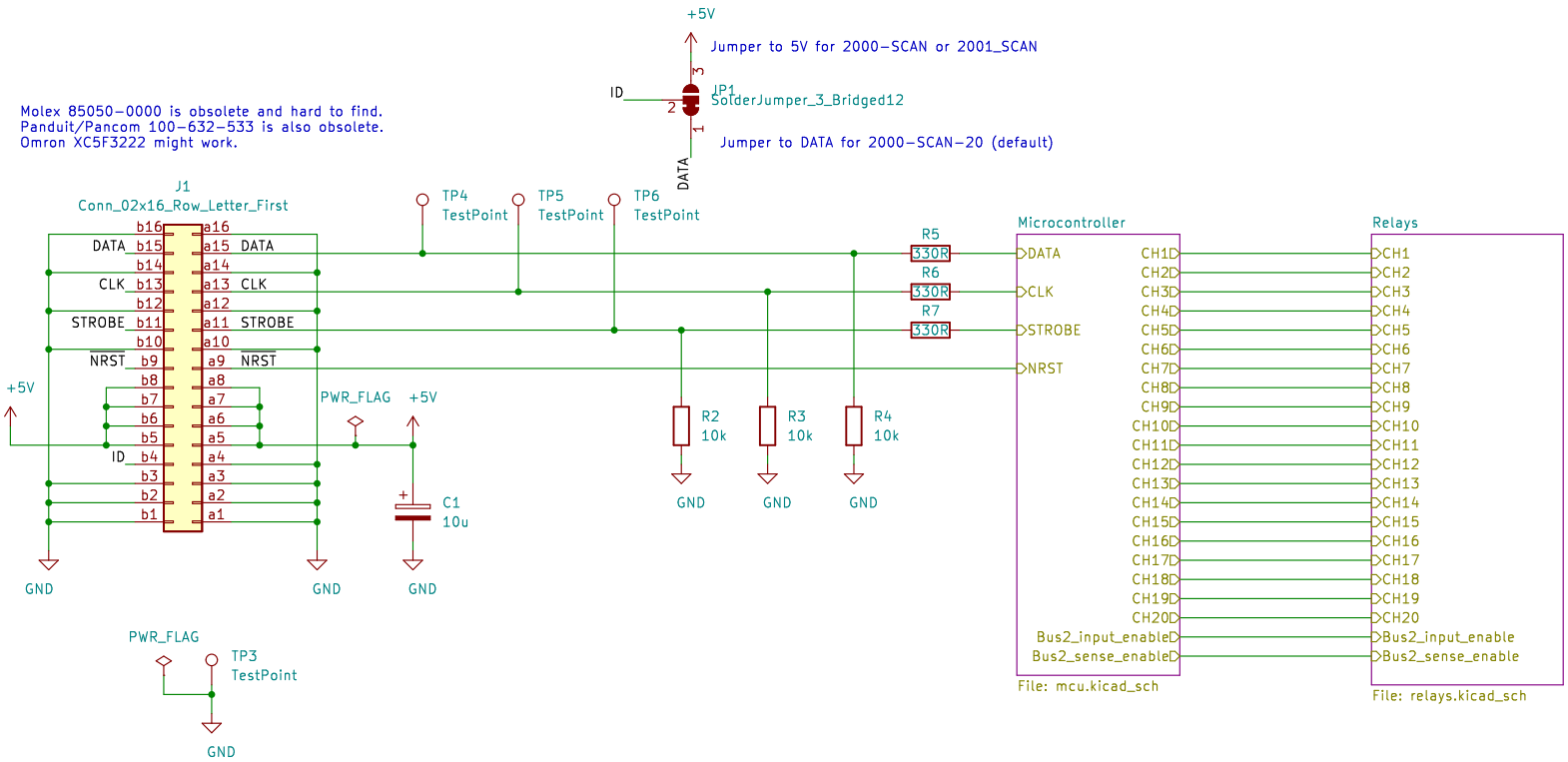


Licensed under CERN OHL v.1.2
Copyright (©) 2021, Patrick Baus <patrick.baus@physik.tu-darmstadt.de>

Sheet: /
File: main.kicad_sch

**Title: Keithley 2000-SCAN-20 SSR**

| | | |
|---|---|---|
| Size: A4 | Date: 2023-05-11 | **Rev: v.1.2.0** |
| KiCad E.D.A. kicad 7.0.2-0 | | Id: 1/5 |

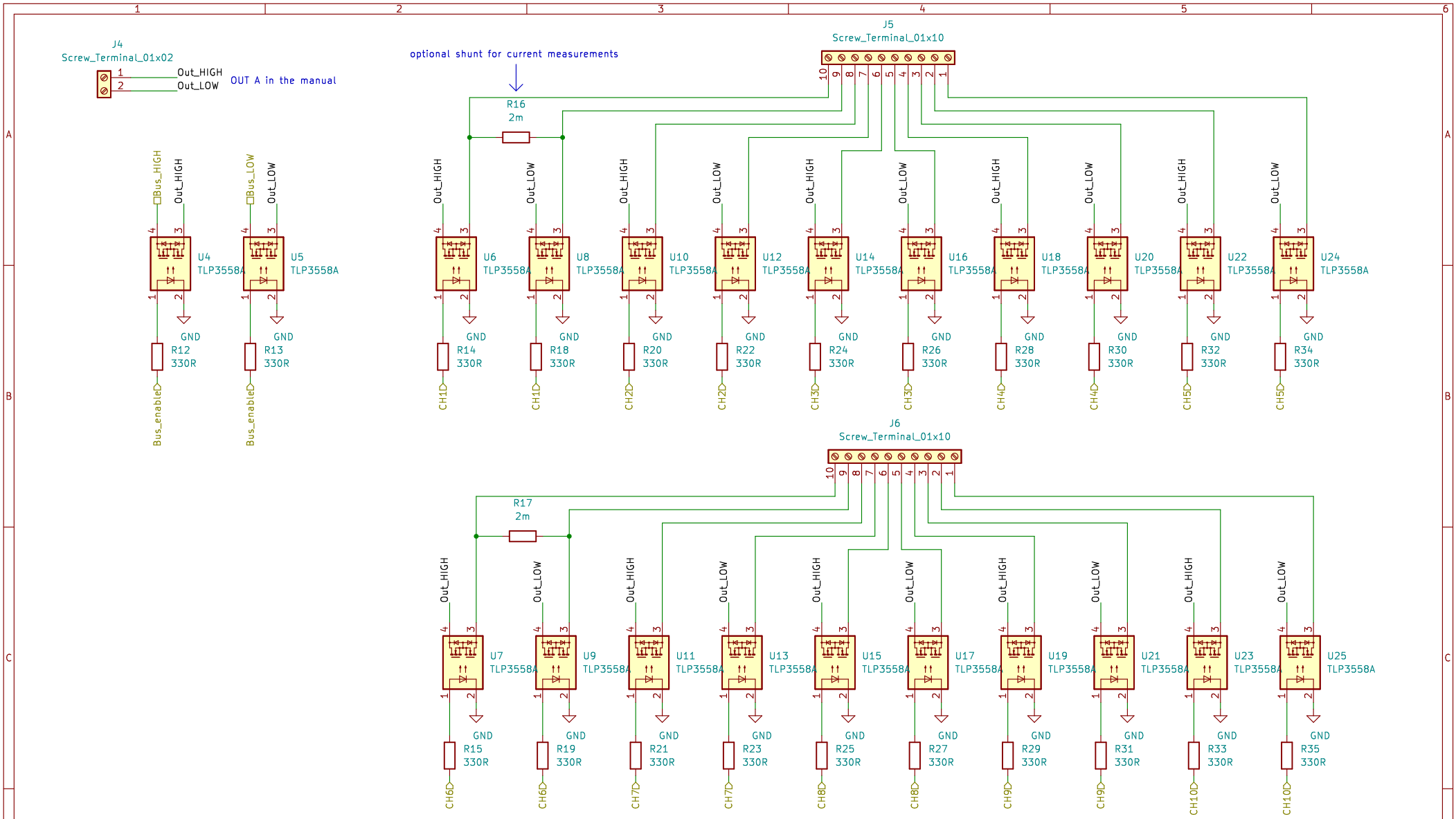


Licensed under CERN OHL v.1.2
Copyright (©) 2021, Patrick Baus <patrick.baus@physik.tu-darmstadt.de>

Sheet: /Relays/Input pins/
File: relay_block.kicad_sch

**Title: Keithley 2000-SCAN-20 SSR**

| | | |
|---|---|---|
| Size: A4 | Date: 2023-05-11 | **Rev: v.1.2.0** |
| KiCad E.D.A. kicad 7.0.2-0 | | Id: 2/5 |

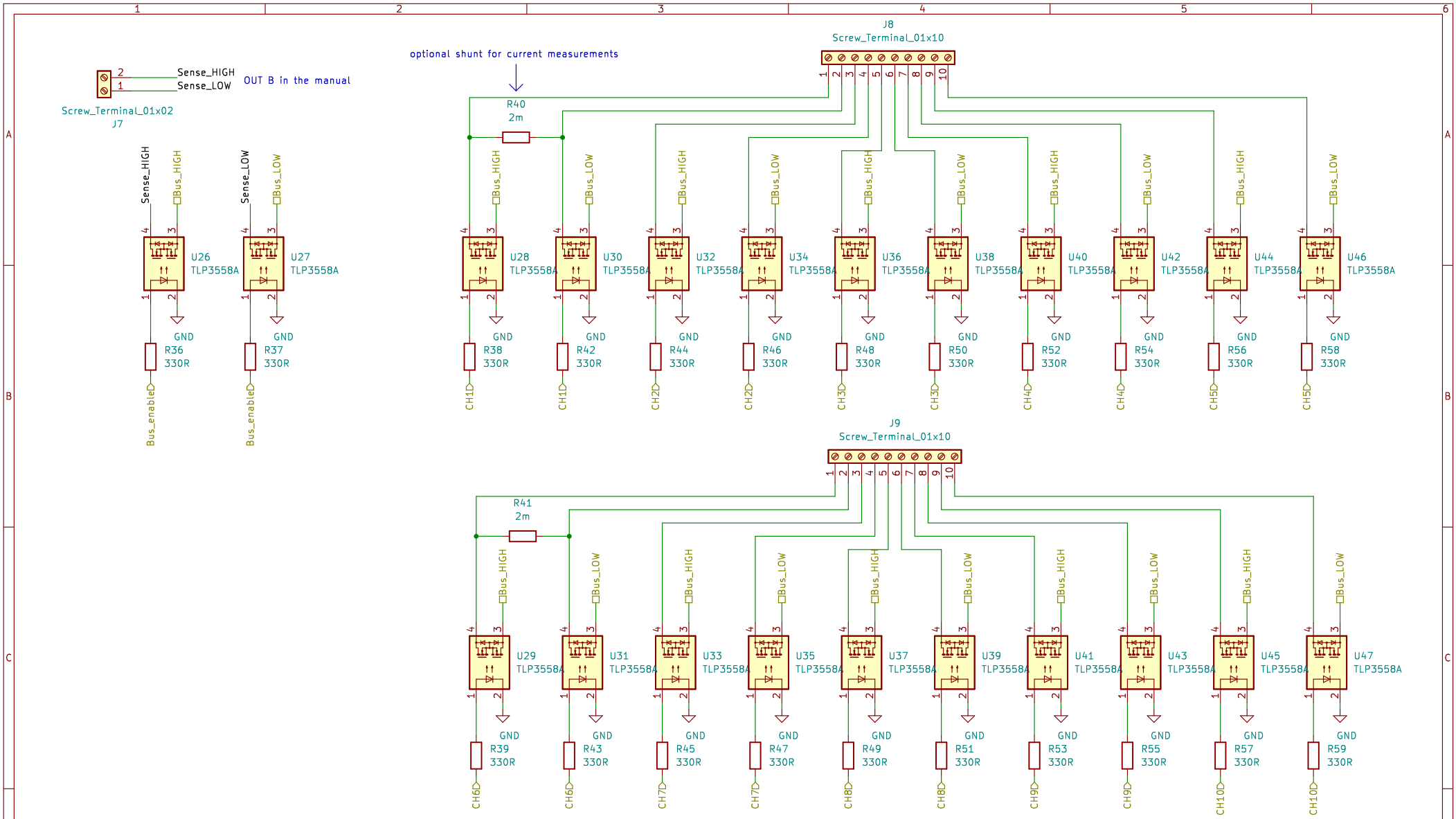


Licensed under CERN OHL v.1.2
Copyright (©) 2021, Patrick Baus <patrick.baus@physik.tu-darmstadt.de>

Sheet: /Relays/Input/Sense pins/
File: relay_block_sense.kicad_sch

**Title: Keithley 2000-SCAN-20 SSR**

| | | |
|---|---|---|
| Size: A4 | Date: 2023-05-11 | **Rev: v.1.2.0** |
| KiCad E.D.A. kicad 7.0.2-0 | | Id: 3/5 |

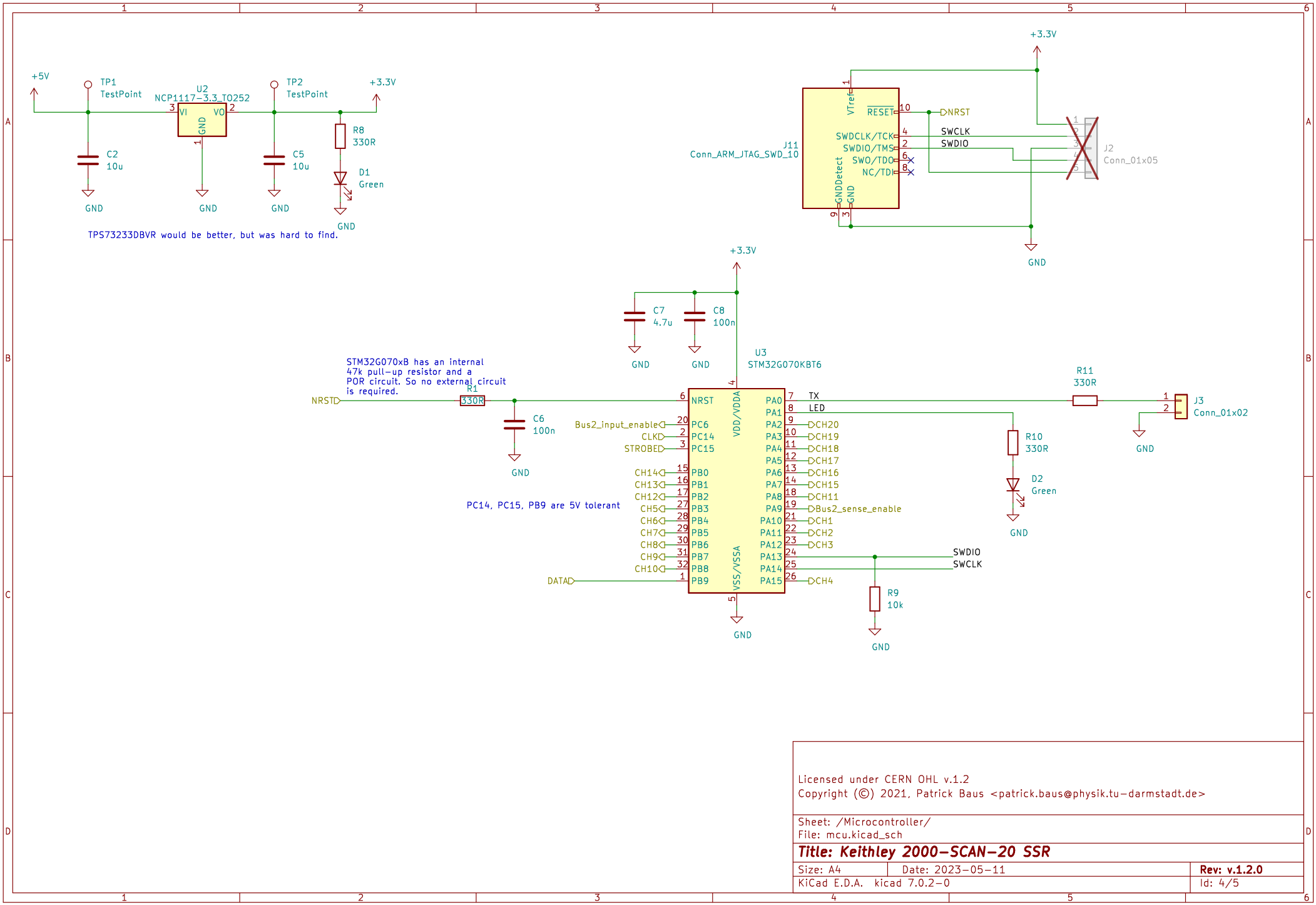


Licensed under CERN OHL v.1.2
Copyright (©) 2021, Patrick Baus <patrick.baus@physik.tu-darmstadt.de>

Sheet: /Microcontroller/
File: mcu.kicad_sch

**Title: Keithley 2000-SCAN-20 SSR**

| | | |
|---|---|---|
| Size: A4 | Date: 2023-05-11 | **Rev: v.1.2.0** |
| KiCad E.D.A. kicad 7.0.2-0 | | Id: 4/5 |

A note on the Relays:
With SSRs, there is always a compromise between on-state resistance and leakage current.
This project is aimed to replace the majority of use cases of a replay card.
- The K2002 manual states the following requirements for the OHMS range:
  The lead resistance on the 20 Ω range must be < 10 Ω on the LO side.
- The DMM6500 says "5 Ω per lead for 1 Ω range".

The relays used have a maximum on-state resistance of 2 Ω. Well below that requirement.
They are also rated for 700 mA and 200 V.
The downside is the leakage current of < 1 µA. The typical value is 40 nA, but there is no guarantee.

The original 2000-SCAN card is rated for 110V, 1A, < 1 Ω contact resistance and
a maximum contact potential of 1 µV, so this replacement is very close to the original 2000-SCAN card.

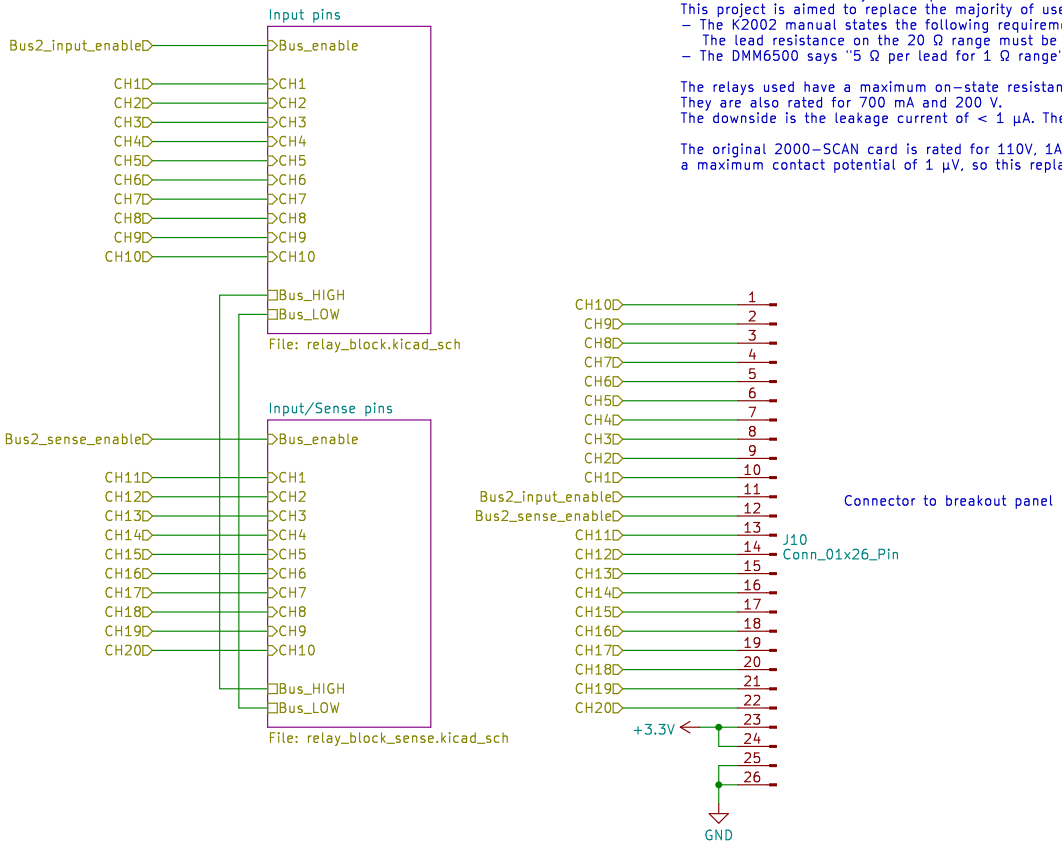


Licensed under CERN OHL v.1.2
Copyright (©) 2021, Patrick Baus <patrick.baus@physik.tu-darmstadt.de>

Sheet: /Relays/
File: relays.kicad_sch

**Title: Keithley 2000-SCAN-20 SSR**

| | | |
|---|---|---|
| Size: A4 | Date: 2023-05-11 | **Rev: v.1.2.0** |
| KiCad E.D.A. kicad 7.0.2-0 | | Id: 5/5 |