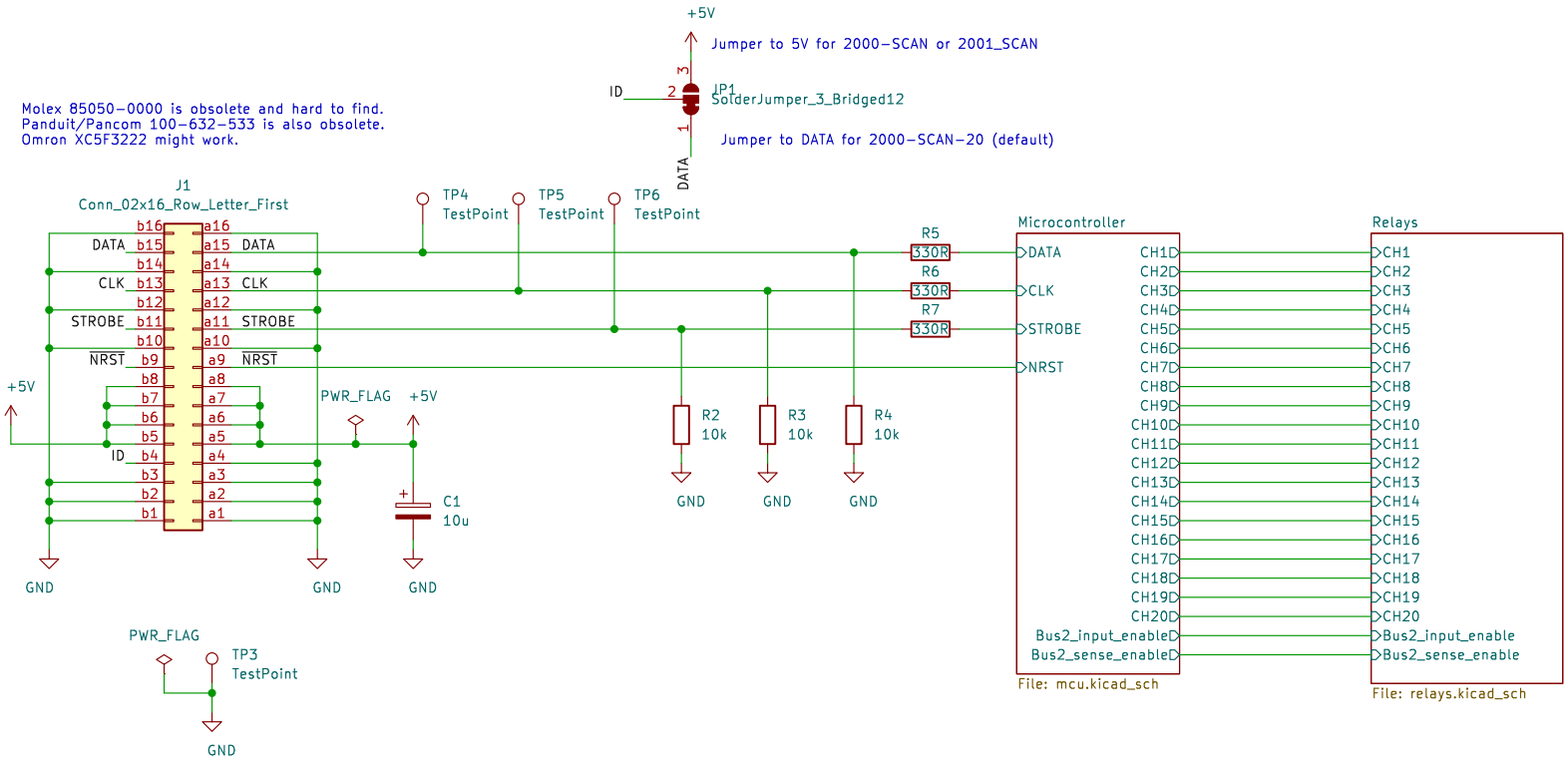

FM1 Fiducial
FM2 Fiducial
FM3 Fiducial
FM4 Fiducial

Added fiducials (by MR-DOS), other changes listed on PCB document
Licensed under CERN OHL v.1.2
Copyright (©) 2021, Patrick Baus <patrick.baus@physik.tu-darmstadt.de>

Sheet: /
File: main.kicad_sch

Title: Keithley 2000-SCAN-20 SSR

Size: A4	Date: 2024-10-22	**Rev: 1.2.2**
KiCad E.D.A. 8.0.6		Id: 1/5

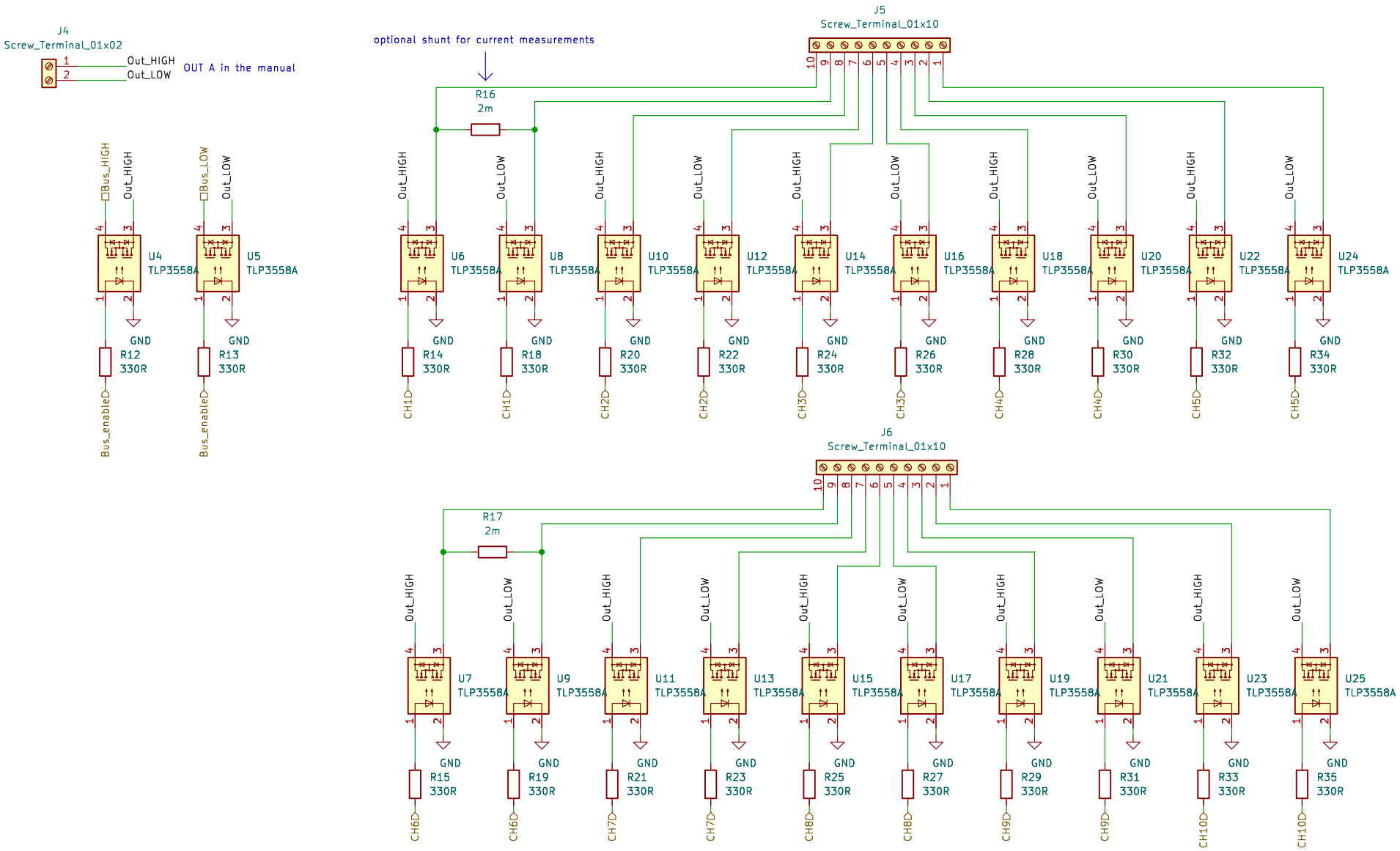

Added fiducials (by MR-DOS), other changes listed on PCB document

Licensed under CERN OHL v.1.2
Copyright (©) 2021, Patrick Baus <patrick.baus@physik.tu-darmstadt.de>

Sheet: /Relays/Input pins/
File: relay_block.kicad_sch

Title: Keithley 2000-SCAN-20 SSR

Size: A4	Date: 2024-10-22	**Rev: 1.2.2**
KiCad E.D.A. 8.0.6		Id: 2/5

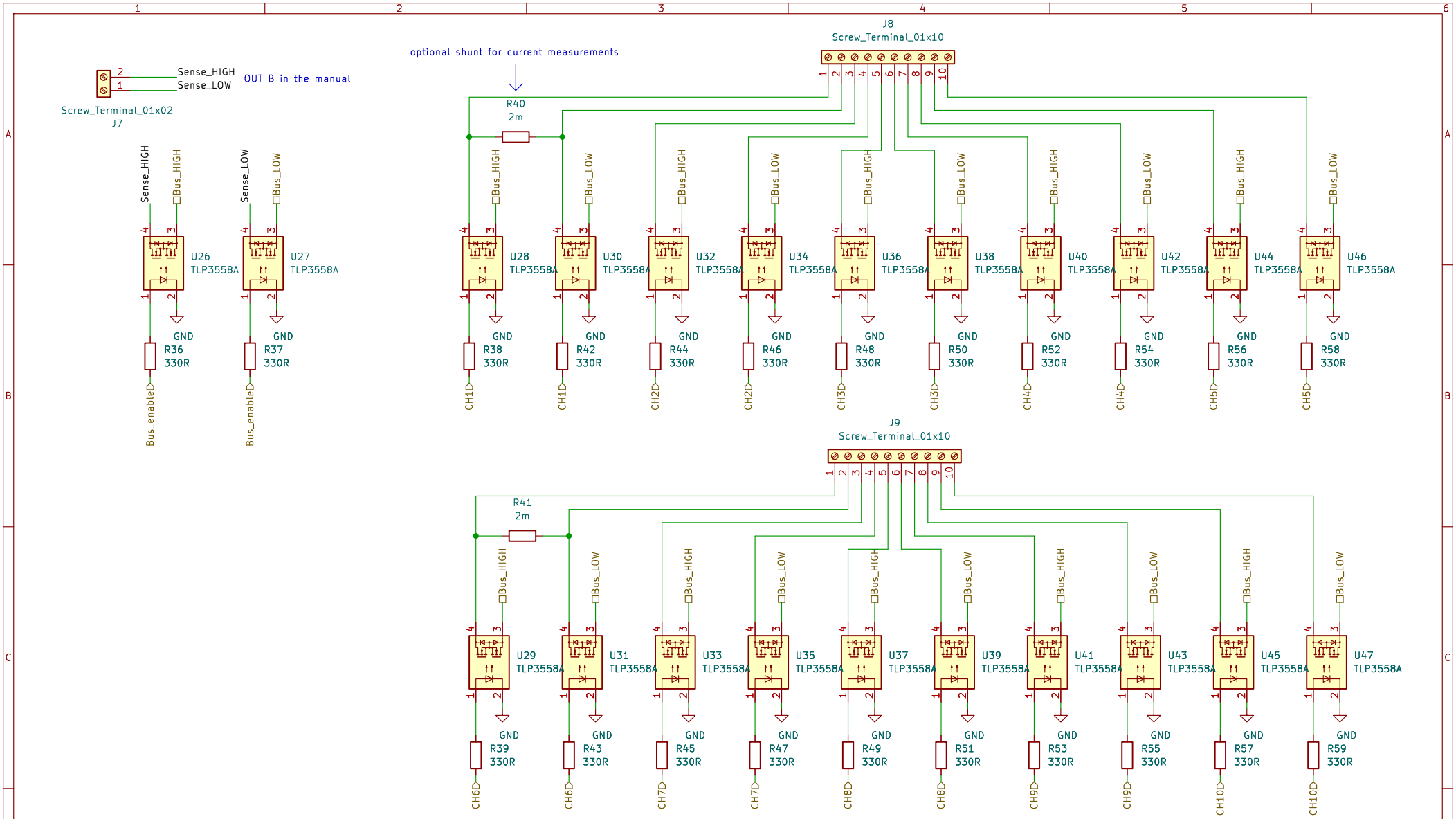

Added fiducials (by MR-DOS), other changes listed on PCB document
Licensed under CERN OHL v.1.2
Copyright (©) 2021, Patrick Baus <patrick.baus@physik.tu-darmstadt.de>

Sheet: /Relays/Input/Sense pins/
File: relay_block_sense.kicad_sch

Title: Keithley 2000-SCAN-20 SSR

Size: A4	Date: 2024-10-22	**Rev: 1.2.2**
KiCad E.D.A. 8.0.6		Id: 3/5

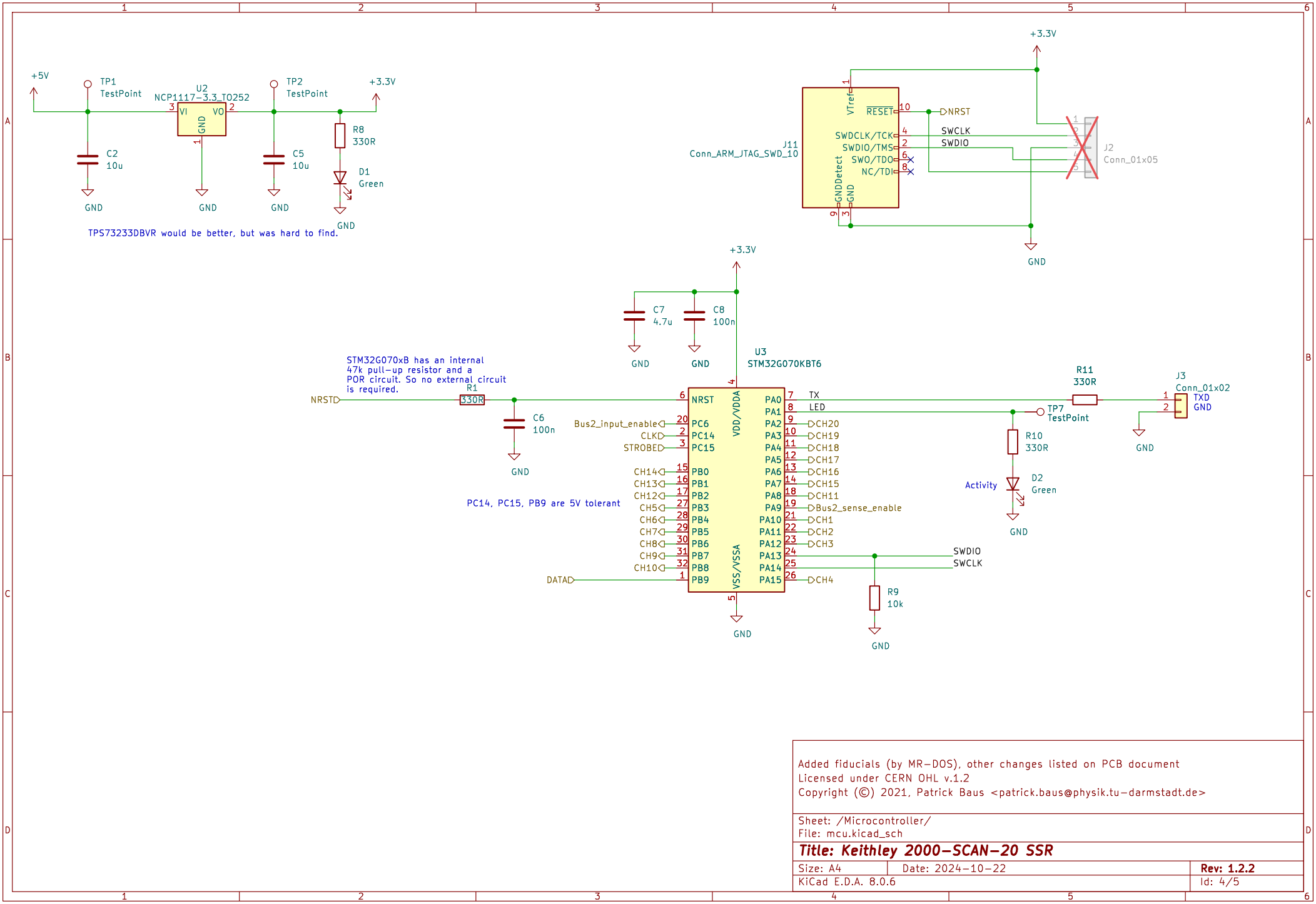

Added fiducials (by MR-DOS), other changes listed on PCB document

Licensed under CERN OHL v.1.2
Copyright (©) 2021, Patrick Baus <patrick.baus@physik.tu-darmstadt.de>

Sheet: /Microcontroller/
File: mcu.kicad_sch

Title: Keithley 2000-SCAN-20 SSR

Size: A4	Date: 2024-10-22	**Rev: 1.2.2**
KiCad E.D.A. 8.0.6		Id: 4/5

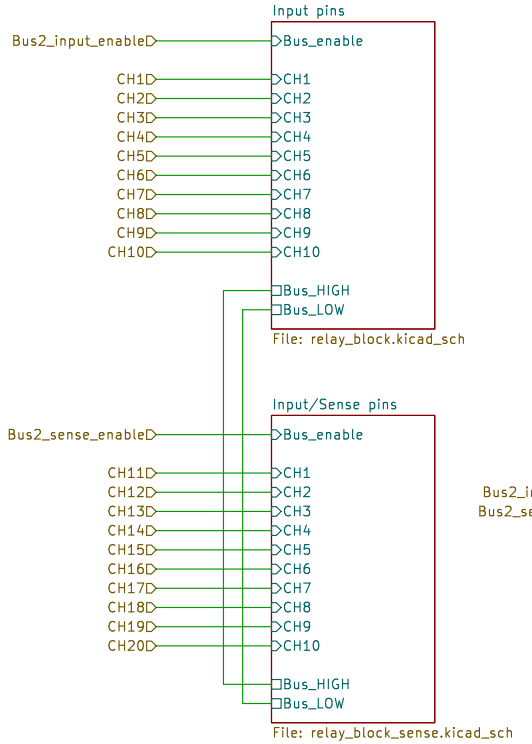

A note on the Relays:
With SSRs, there is always a compromise between on-state resistance and leakage current.
This project is aimed to replace the majority of use cases of a replay card.
- The K2002 manual states the following requirements for the OHMS range:
  The lead resistance on the 20 Ω range must be < 10 Ω on the LO side.
- The DMM6500 says "5 Ω per lead for 1 Ω range".

The relays used have a maximum on-state resistance of 2 Ω. Well below that requirement.
They are also rated for 700 mA and 200 V.
The downside is the leakage current of < 1 µA. The typical value is 40 nA, but there is no guarantee.

The original 2000-SCAN card is rated for 110V, 1A, < 1 Ω contact resistance and
a maximum contact potential of 1 µV, so this replacement is very close to the original 2000-SCAN card.

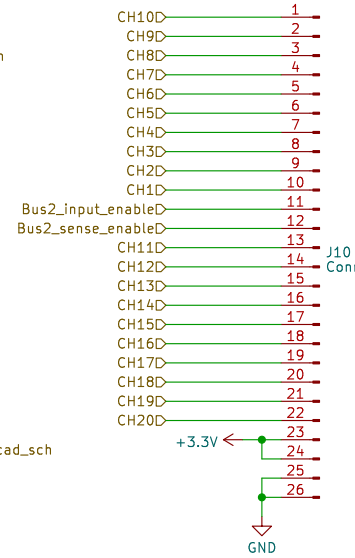

Connector to breakout panel

STM32G070KBT6:
max output sink/source IO current per pin = 15mA.
max combined output sink/source IO current = 80mA.

TLP3558A:
Max trigger current = 3mA, but recommended current = 10mA.
On 3.3V, with a 330R current limiter, the TLP3558A will draw 5.4mA max.

Hence: About 11mA max per IO pin in the current config. Not a lot of headroom left.

Therefore: If you want to connect a breakout panel, then either:

* do that on a 2000-SCAN board that is not equipped with optos
or
* use a breakout panel equipped with line drivers

Added fiducials (by MR-DOS), other changes listed on PCB document

Licensed under CERN OHL v.1.2
Copyright (©) 2021, Patrick Baus <patrick.baus@physik.tu-darmstadt.de>

Sheet: /Relays/
File: relays.kicad_sch

Title: Keithley 2000-SCAN-20 SSR

Size: A4	Date: 2024-10-22	**Rev: 1.2.2**
KiCad E.D.A. 8.0.6		Id: 5/5