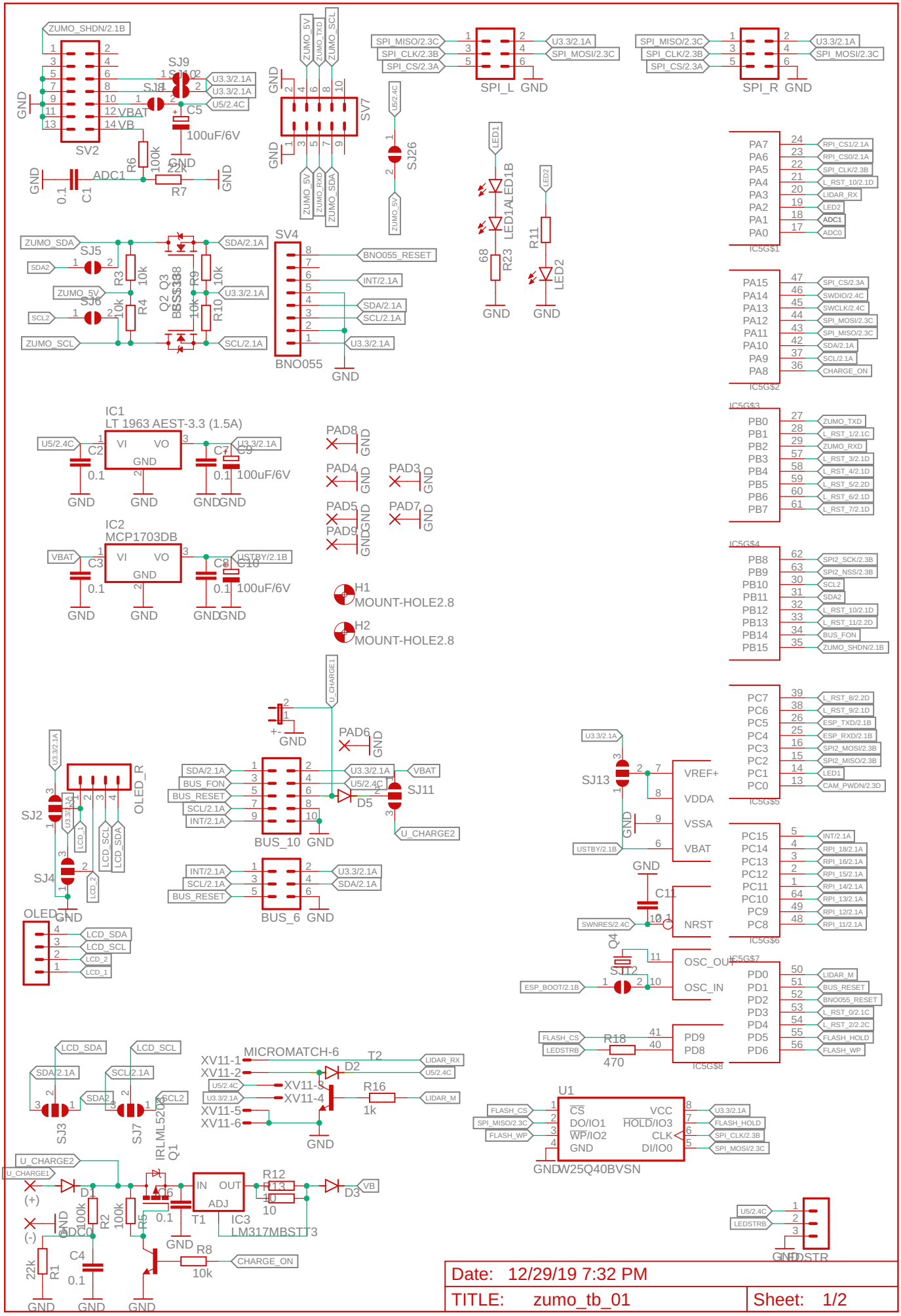

Date: 12/29/19 7:32 PM

TITLE: zumo_tb_01

Sheet: 1/2

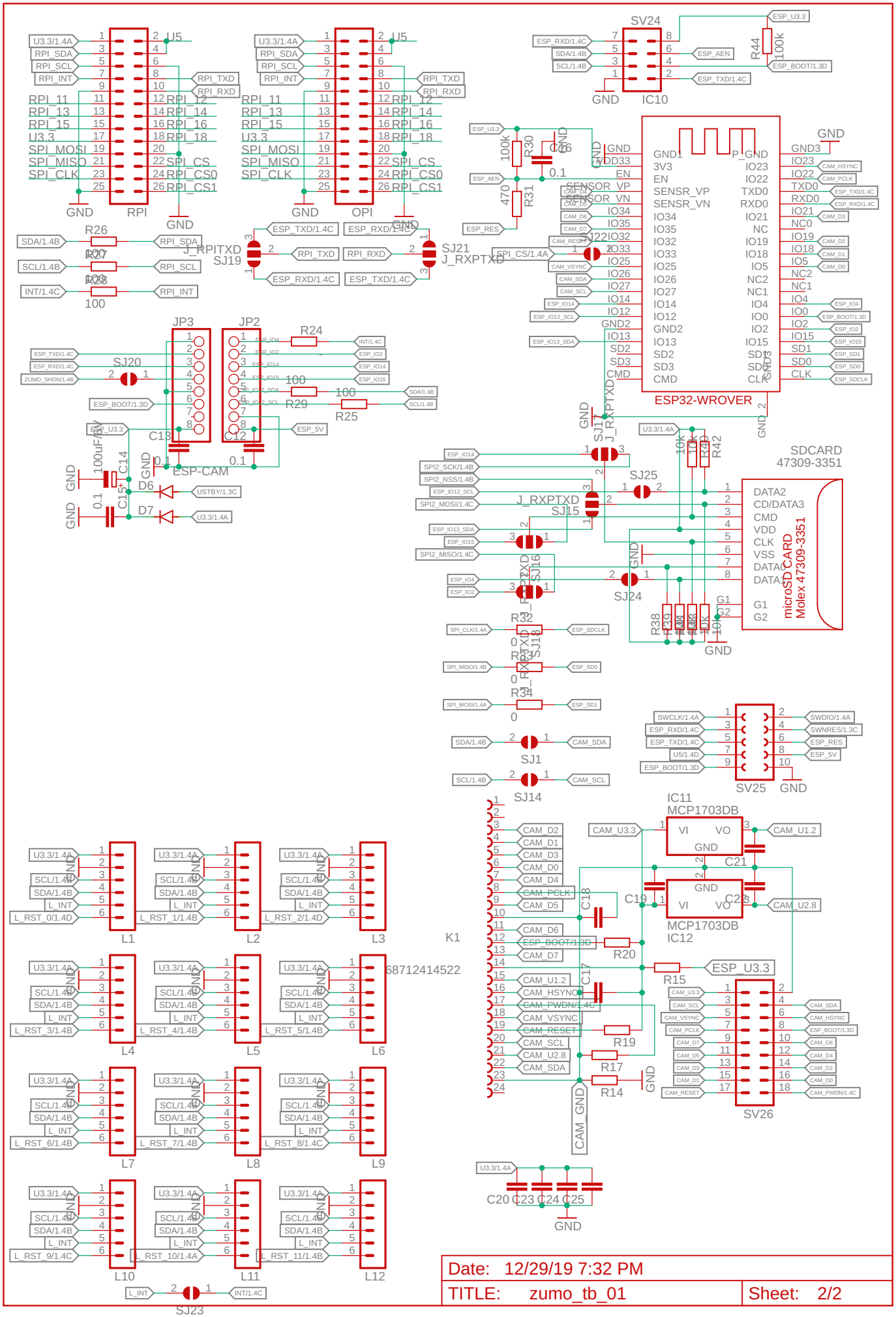
U5
RPI
OPI
SV24
IC10
ESP32-WROVER
SDCARD
47309-3351
microSD CARD
Molex 47309-3351
J_RPITXD
J_RXPTXD
SJ19
SJ21
SJ20
JP3
JP2
ESP-CAM
SJ15
SJ16
SJ18
SJ17
SJ1
SJ14
SJ25
SJ24
SJ23
SV25
IC11
MCP1703DB
IC12
K1
68712414522
SV26
L1
L2
L3
L4
L5
L6
L7
L8
L9
L10
L11
L12
Date: 12/29/19 7:32 PM
TITLE: zumo_tb_01
Sheet: 2/2