Metal Deformation Processing

By
Dr. R. B. Singh
Assistant Professor
E-mail – raj@nith.ac.in

Department of Materials Science and Engineering
National Institute of Technology Hamirpur
Hamirpur – 177005, H. P. India

Metal forming:

Large set of manufacturing processes in which the material is deformed plastically to take the shape of the die geometry. The tools used for such deformation are called die, punch etc. depending on the type of process.

The term *metal forming refers to a group of* manufacturing methods by which the given material, usually shapeless or of a simple geometry, is transformed into a useful part without change in the mass or composition of the material. This part usually has a complex geometry with well defined

(a) shape,
(b) size,
(c) accuracy and tolerances,
(d) appearance, and
(e) properties.

The manufacture of metal parts and assemblies can be classified, in a simplified manner, into five general areas:

- *Primary shaping processes, such as casting,* melt extrusion, die casting, and pressing of metal powder. In all these processes, the material initially has no shape but obtains a well-defined geometry through the process.

- *Metal forming processes such as rolling, extrusion,* cold and hot forging, bending, and deep drawing, where metal is formed by plastic deformation.

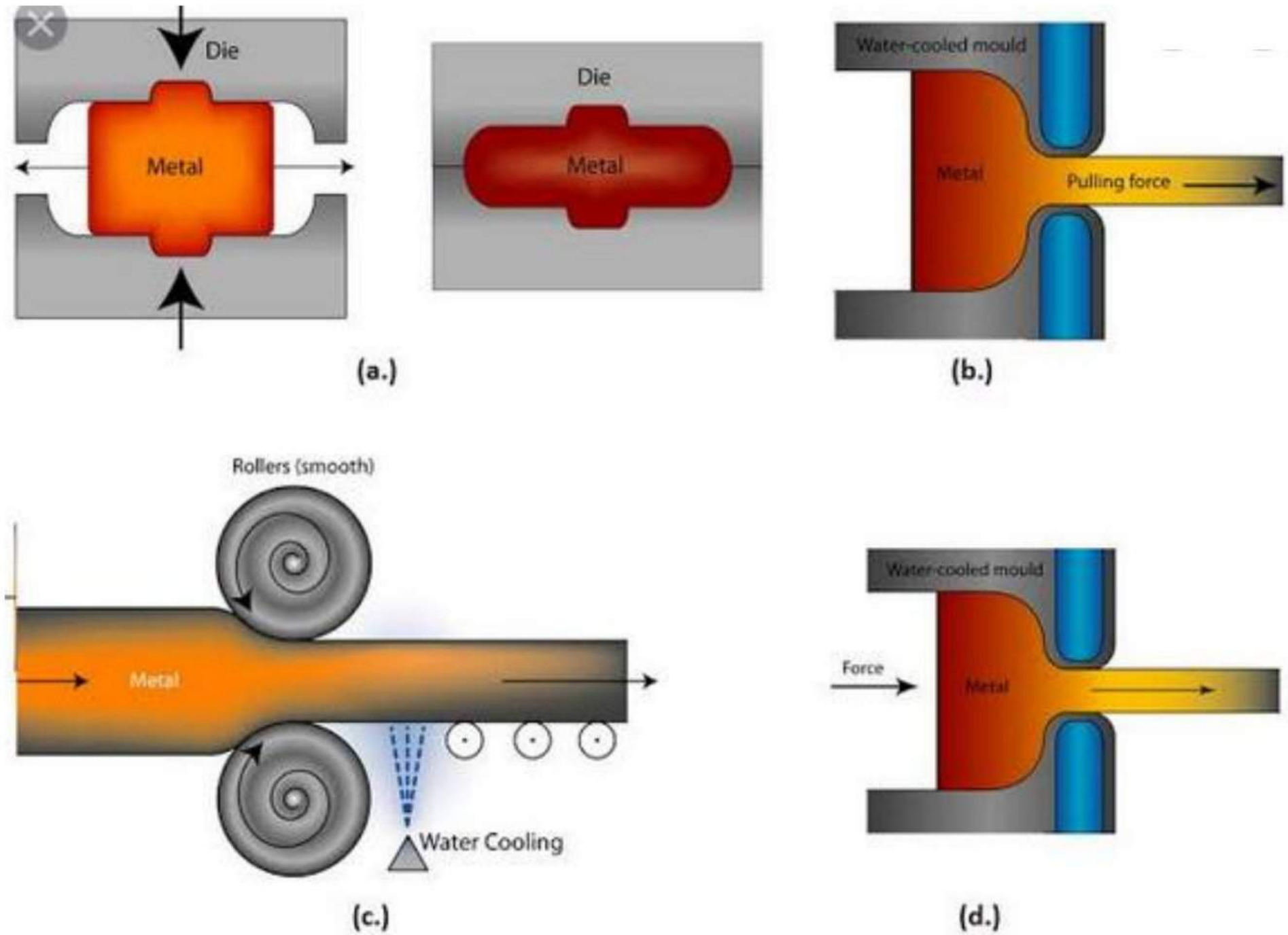

Metal cutting processes, such as sawing, turning, milling and broaching where removing metal generates a new shape.

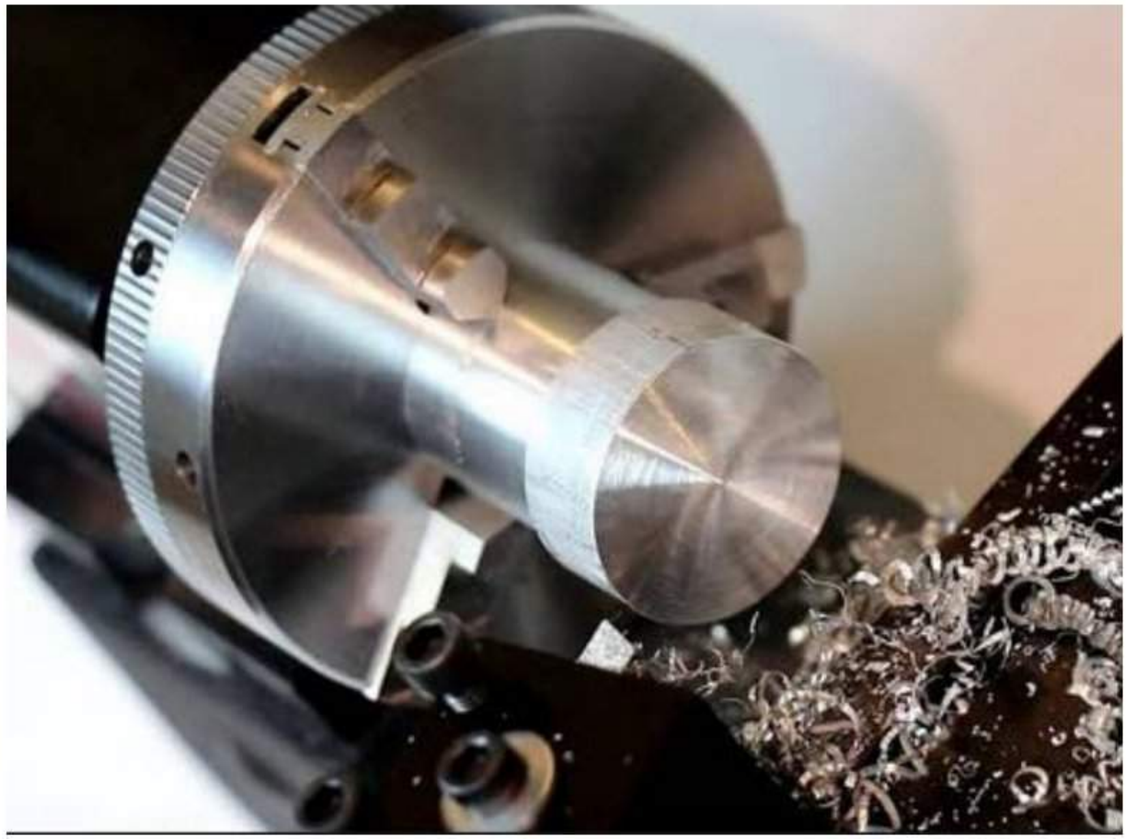

- *Metal treatment processes, such as heat treating,* anodizing and surface hardening, where the part remains essentially unchanged in shape but undergoes change in properties or appearance.

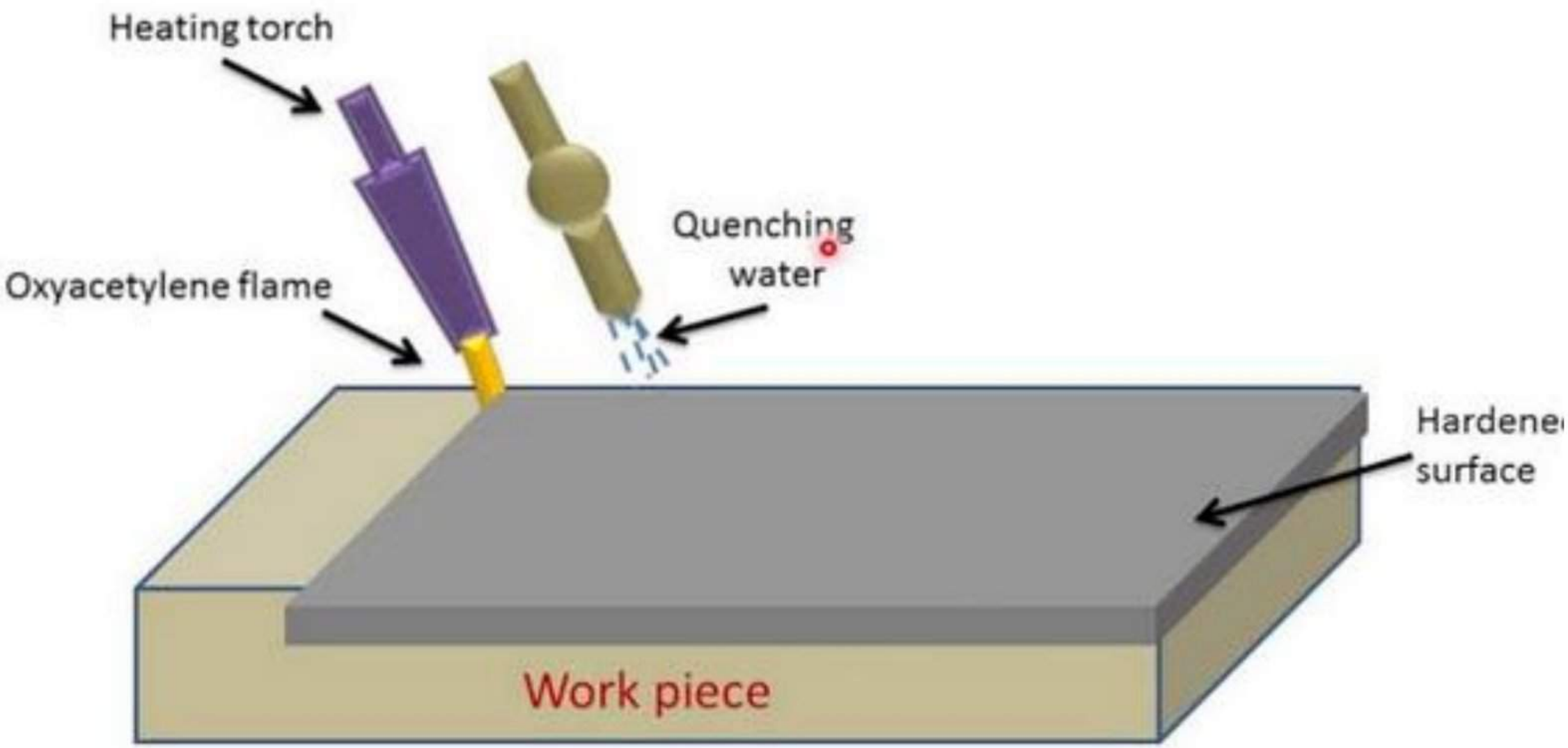

Joining processes, including (a) metallurgical joining, such as welding and diffusion bonding (b) mechanical joining, such as riveting, shrink fitting, and mechanical assembly

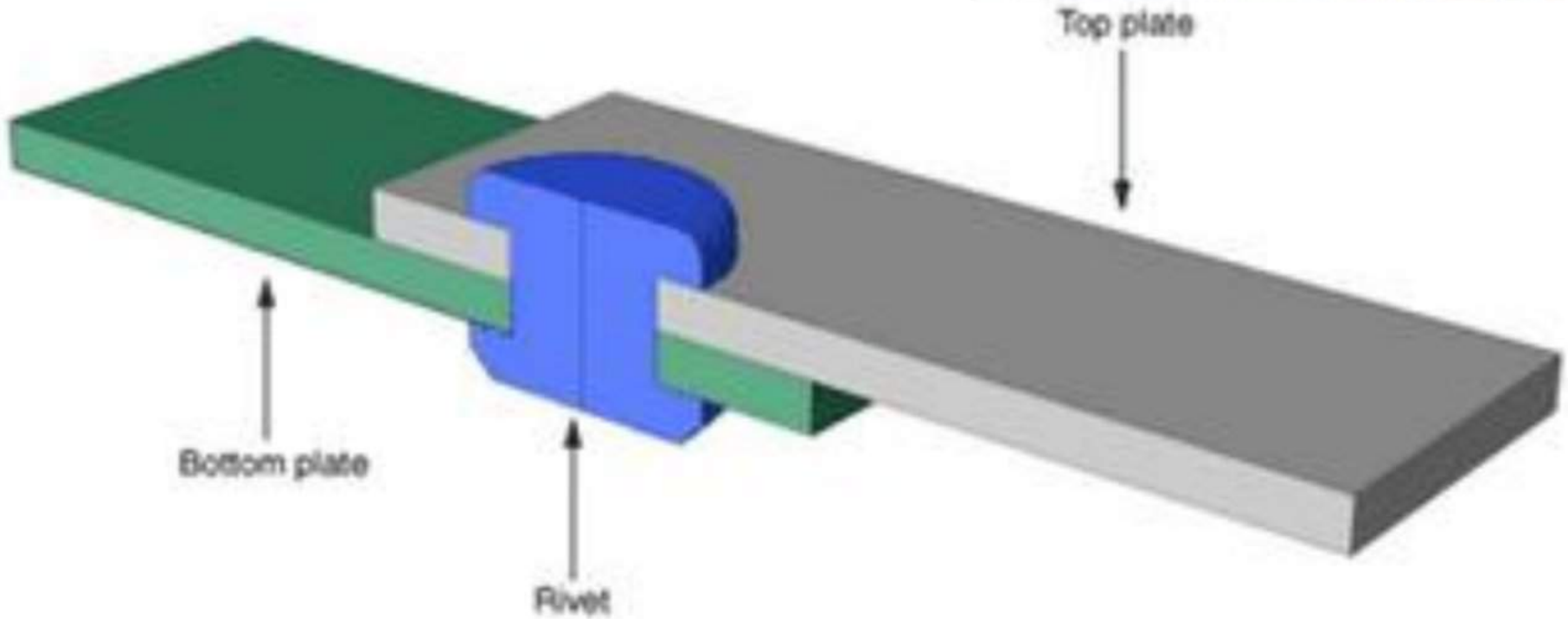

Among all manufacturing processes, metal forming technology has a special place because:

✓It helps to produce parts of superior mechanical properties with minimum waste of material.

✓In metal forming, the starting material has a relatively simple geometry.

✓The material is plastically deformed in one or more operations into a product of relatively complex configuration.

✓Forming to near-net- or to net-shape dimensions drastically reduces metal removal requirements, resulting in significant material and energy savings.

✓Metal forming usually requires relatively expensive tooling.

✓Thus, the process is economically attractive only when a large number of parts must be produced and/or when the mechanical properties required in the finished product can be obtained only by a forming process.

Forming processes are especially attractive in cases where:

- The part geometry is of moderate complexity and the production volumes are large, so that tooling costs per unit product can be kept low (e.g., automotive applications).

- The part properties and metallurgical integrity are extremely important (e.g., load carrying aircraft, jet engine, and turbine components). The design, analysis, and optimization of forming processes require:

- Engineering knowledge regarding metal flow, stresses, and heat transfer

- Technological information related to lubrication, heating and cooling techniques, material handling, die design, and forming equipment [Altan et al., 1983]

Classification of metal forming Processes

Theses processes are classified in to two broad categories

1. Bulk metal forming
   (a) Forging
   (b) Rolling
   (c) Extrusion
   (d) Wire and Bar Drawing

1. Sheet metal forming
   (a) Bending Operation
   (b) Stretching
   (c) Deep or cup Drawing
   (d) Shearing Processes
   (e) Miscellaneous Processes

✓Metal forming processes, also known as mechanical working processes, are primary shaping processes in which a mass of metal or alloy is subjected to mechanical forces.

✓Under the action of such forces, the shape and size of metal piece undergo a change.

✓By mechanical working processes, the given shape and size of a machine part can be achieved with great economy in material and time.

✓Metal forming is possible in case of such metals or alloys which are sufficiently malleable and ductile.

✓Mechanical working requires that the material may undergo "plastic deformation" during its processing.

✓Frequently, work piece material is not sufficiently malleable or ductile at ordinary room temperature, but may become so when heated.

✓Thus we have both hot and cold metal forming operations.

✓When a single crystal is subjected to an external force, it first undergoes elastic deformation; that is, it returns to its original shape when the force is removed.

✓For example, the behavior is a helical spring that stretches when loaded and returns to its original shape when the load is removed.

✓If the force on the crystal structure is increased sufficiently, the crystal undergoes plastic deformation or permanent deformation; that is, it does not return to its original shape when the force is removed.

Mechanics of Metal Working

✓There are two basic mechanisms by which plastic deformation takes place in crystal structures.

✓One is the **slipping of one plane of atoms over an adjacent plane (called the slip plane) under a shear stress.**

✓**The behavior is much like the sliding of playing cards against each other. Shear stress is defined as** the ratio of the applied shearing force to the cross-sectional area being sheared, just as it takes a certain magnitude of force to slide playing cards against each.

✓In other word we can say that a single crystal requires a certain amount of shear stress (called critical shear stress) to undergo permanent deformation.

Mechanics of Metal Working

✓Thus, there must be a shear stress of sufficient magnitude within a crystal for plastic deformation to occur; otherwise the deformation remains elastic.

✓The second and less common mechanism of plastic deformation in crystals is **twinning, in which a portion of the crystal forms a mirror image of itself across the plane of twinning.**

✓**Twins form abruptly and are the cause of the creaking sound ("tin cry") that occurs when a tin or zinc rod is bent at room temperature.**

✓**Twinning usually occurs in hcp metals.**

Yield Criteria

✓The yield criteria limit the elastic region.

✓It is a mathematical expression to define the combination of component of stress such that when it reaches material no more behaves elastically.

✓Yield criterion gives the onset plastic deformation.

✓In other word if a state of stress satisfies yield criterion, we can say that plastification may start.

✓It is assumed that initial yielding depends upon only on state of stress and not on how the stress is reached.

Von Mises (1913) proposed that yielding would occur when the second invariant of the stress deviator J_2 exceeded some critical value.

$$J_2 = k^2 \tag{3-10}$$

where $J_2 = \frac{1}{6}[(\sigma_1 - \sigma_2)^2 + (\sigma_2 - \sigma_3)^2 + (\sigma_3 - \sigma_1)^2]$.

To evaluate the constant k and relate it to yielding in the tension test, we realize that at yielding in uniaxial tension $\sigma_1 = \sigma_0$, $\sigma_2 = \sigma_3 = 0$

$$\sigma_0^2 + \sigma_0^2 = 6k^2$$

$$\sigma_0 = \sqrt{3}\,k \tag{3-11}$$

Substituting Eq. (3-11) in Eq. (3-10) results in the usual form of the von Mises' yield criterion

$$\sigma_0 = \frac{1}{\sqrt{2}}\left[(\sigma_1 - \sigma_2)^2 + (\sigma_2 - \sigma_3)^2 + (\sigma_3 - \sigma_1)^2\right]^{1/2} \tag{3-12}$$

or from Eq. (2-61)

$$\sigma_0 = \frac{1}{\sqrt{2}}\left[(\sigma_x - \sigma_y)^2 + (\sigma_y - \sigma_z)^2 + (\sigma_z - \sigma_x)^2 + 6\left(\tau_{xy}^2 + \tau_{yz}^2 + \tau_{xz}^2\right)\right]^{1/2} \quad (3\text{-}13)$$

Equation (3-12) or (3-13) predicts that yielding will occur when the differences of stresses on the right side of the equation exceed the yield stress in uniaxial tension σ_0.

J_2 can be obtained from the sum of the principal minors of σ'_{ij}.

$$J_2 = \tau_{xy}^2 + \tau_{yz}^2 + \tau_{xz}^2 - \sigma'_x\sigma'_y - \sigma'_y\sigma'_z - \sigma'_z\sigma'_x$$

$$= \tfrac{1}{6}\left[(\sigma_x - \sigma_y)^2 + (\sigma_y - \sigma_z)^2 + (\sigma_z - \sigma_x)^2 + 6\left(\tau_{xy}^2 + \tau_{yz}^2 + \tau_{xz}^2\right)\right] \quad (2\text{-}61)$$

Example Stress analysis of a spacecraft structural member gives the state of stress shown below. If the part is made from 7075-T6 aluminum alloy with $\sigma_0 = 500$ MPa, will it exhibit yielding? If not, what is the safety factor?

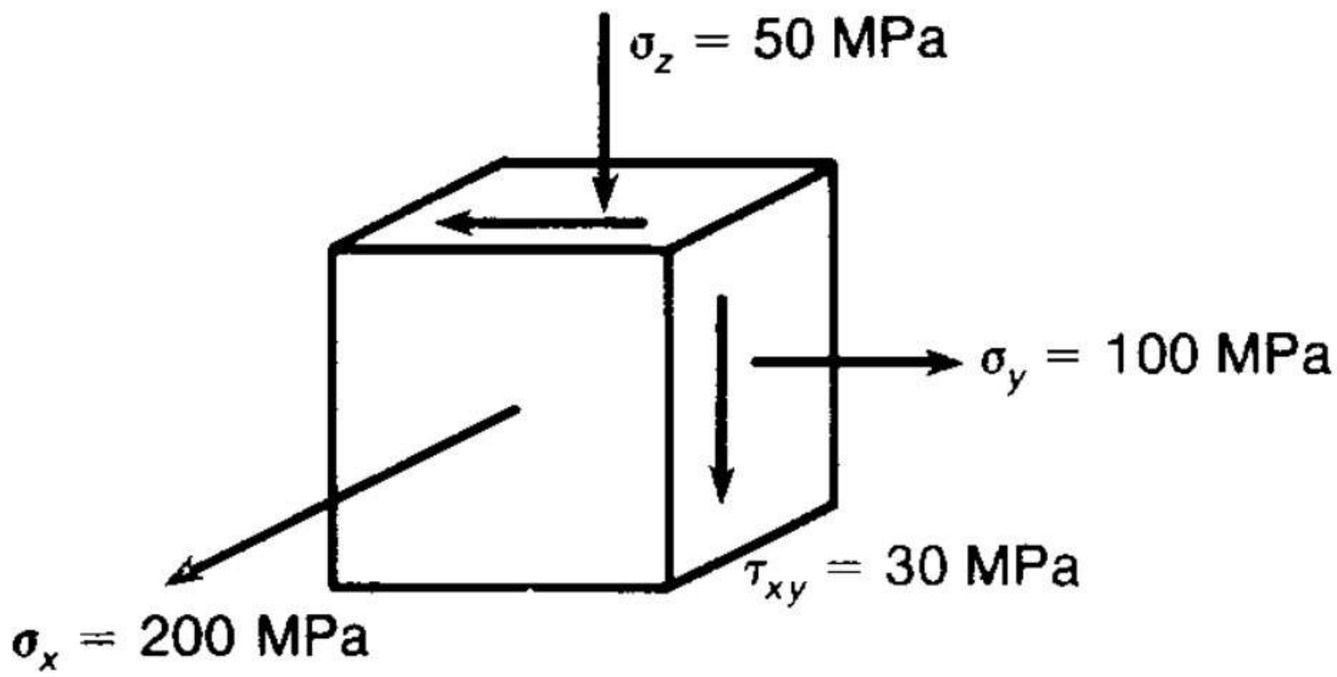

$$\sigma_0 = \frac{1}{\sqrt{2}}\left[(\sigma_x - \sigma_y)^2 + (\sigma_y - \sigma_z)^2 + (\sigma_z - \sigma_x)^2 + 6\left(\tau_{xy}^2 + \tau_{yz}^2 + \tau_{xz}^2\right)\right]^{1/2}$$

$$\sigma_0 = \frac{1}{\sqrt{2}}\left[(200-100)^2 + (100-(-50))^2 + (-50-200)^2 + 6(30)^2\right]^{1/2}$$

$$\sigma_0 = \frac{1}{\sqrt{2}}(100{,}400)^{1/2} = \frac{316.859}{\sqrt{2}} = 224 \text{ MPa}$$

Since the value of σ_0 calculated from the yield criterion is less than the yield strength of the aluminum alloy, yielding will not occur. The safety factor is $500/224 = 2.2$.

To identify the constant k in Eq. (3-10), consider the state of stress in pure shear, as is produced in a torsion test.

$$\sigma_1 = -\sigma_3 = \tau \qquad \sigma_2 = 0$$

$$\text{at yielding} \qquad \sigma_1^2 + \sigma_1^2 + 4\sigma_1^2 = 6k^2$$

$$\therefore \quad \sigma_1 = k$$

so that k represents the yield stress in pure shear (torsion). Therefore, the von Mises' criterion predicts that the yield stress in torsion will be less than in uniaxial tension according to

$$k = \frac{1}{\sqrt{3}}\sigma_0 = 0.577\sigma_0 \tag{3-14}$$

To summarize, note that the von Mises' yield criterion implies that yielding is not dependent on any particular normal stress or shear stress, but instead, yielding depends on a function of all three values of principal shearing stress. Since the yield criterion is based on differences of normal stresses, $\sigma_1 - \sigma_2$, etc., the criterion is independent of the component of hydrostatic stress. Since the von Mises' yield criterion involves squared terms, the result is independent of the sign of the individual stresses. This is an important advantage since it is not necessary to know which are the largest and smallest principal stresses in order to use this yield criterion.

Von Mises originally proposed this criterion because of its mathematical simplicity. Subsequently, other workers have attempted to give it physical meaning. Hencky (1924) showed that Eq. (3-12) was equivalent to assuming that yielding occurs when the *distortion energy* reaches a critical value. The distortion energy is that part of the total strain energy per unit volume that is involved in change of shape as opposed to a change in volume.

$$(U_0)_{\text{distortion}} = \frac{1}{6G}\left(\sigma_1^2 + \sigma_2^2 + \sigma_3^2 - \sigma_1\sigma_2 - \sigma_2\sigma_3 - \sigma_1\sigma_3\right)$$

or

$$(U_0)_{\text{distortion}} = \frac{1}{12G}\left[(\sigma_1 - \sigma_2)^2 + (\sigma_2 - \sigma_3)^2 + (\sigma_3 - \sigma_1)^2\right] \quad (3\text{-}18)$$

For a uniaxial state of stress, $\sigma_1 = \sigma_0$, $\sigma_2 = \sigma_3 = 0$

$$(U_0)_{\text{distortion}} = \frac{1}{12G}2\sigma_0^2$$

$$\sigma_0 = \frac{1}{\sqrt{2}}\left[(\sigma_1 - \sigma_2)^2 + (\sigma_2 - \sigma_3)^2 + (\sigma_3 - \sigma_1)^2\right]^{1/2} \quad (3\text{-}19)$$

Another physical interpretation given to the von Mises' yield criterion is that it represents the critical value of the octahedral shear stress (see Sec. 3-9). This is the shear stress on the octahedral planes which make equal angles with the principal axes. Still another interpretation is that it represents the mean square of the shear stress averaged over all orientations in the solid.[1]

Maximum-Shear-Stress or Tresca Criterion

This yield criterion assumes that yielding occurs when the maximum shear stress reaches the value of the shear stress in the uniaxial-tension test. From Eq. (2-21), the maximum shear stress is given by

$$\tau_{max} = \frac{\sigma_1 - \sigma_3}{2} \tag{3-20}$$

where σ_1 is the algebraically largest and σ_3 is the algebraically smallest principal stress.

For uniaxial tension, $\sigma_1 = \sigma_0$, $\sigma_2 = \sigma_3 = 0$, and the shearing yield stress τ_0 is equal to $\sigma_0/2$. Substituting in Eq. (3-20),

$$\tau_{max} = \frac{\sigma_1 - \sigma_3}{2} = \tau_0 = \frac{\sigma_0}{2}$$

Therefore, the maximum-shear-stress criterion is given by

$$\sigma_1 - \sigma_3 = \sigma_0 \tag{3-21}$$

For a state of pure shear, $\sigma_1 = -\sigma_3 = k$, $\sigma_2 = 0$, the maximum-shear-stress criterion predicts that yielding will occur when

$$\sigma_1 - \sigma_3 = 2k = \sigma_0$$

or

$$k = \frac{\sigma_0}{2}$$

so that the maximum-shear-stress criterion may be written

$$\sigma_1 - \sigma_3 = \sigma_1' - \sigma_3' = 2k = \tau_0 \tag{3-22}$$

We note that the maximum-shear-stress criterion is less complicated mathematically than the von Mises' criterion, and for this reason it is often used in engineering design. However, the maximum-shear criterion does not take into consideration the intermediate principal stress. It suffers from the major difficulty that it is necessary to know in advance which are the maximum and minimum principal stresses. Moreover, the general form of the maximum-shear-stress criterion, Eq. (3-23), is far more complicated than the von Mises' criterion, Eq. (3-10), and for this reason the von Mises' criterion is preferred in most theoretical work.

$$4J_2^3 - 27J_3^2 - 36k^2J_2^2 + 96k^4J_2 - 64k^6 = 0 \tag{3-23}$$

Example Use the maximum-shear-stress criterion to establish whether yielding will occur for the stress state shown in the previous example.

$$\tau_{max} = \frac{\sigma_x - \sigma_z}{2} = \frac{\sigma_0}{2}$$

$$200 - (-50) = \sigma_0$$

$$\sigma_0 = 250 \text{ MPa}$$

Again, the calculated value of σ_0 is less than the yield strength of the material.

If a specimen is deformed plastically beyond the yield stress in one direction, e.g., in tension, and then after unloading to zero stress it is reloaded in the opposite direction, e.g., in compression, it is found that the yield stress on reloading is less than the original yield stress. Referring to Fig. 3-1*c*, $\sigma_b < \sigma_a$. This dependence of the yield stress on loading path and direction is called the *Bauschinger effect*. The Bauschinger effect is commonly ignored in plasticity theory, and it is usual to assume that the yield stress in tension and compression are the same.

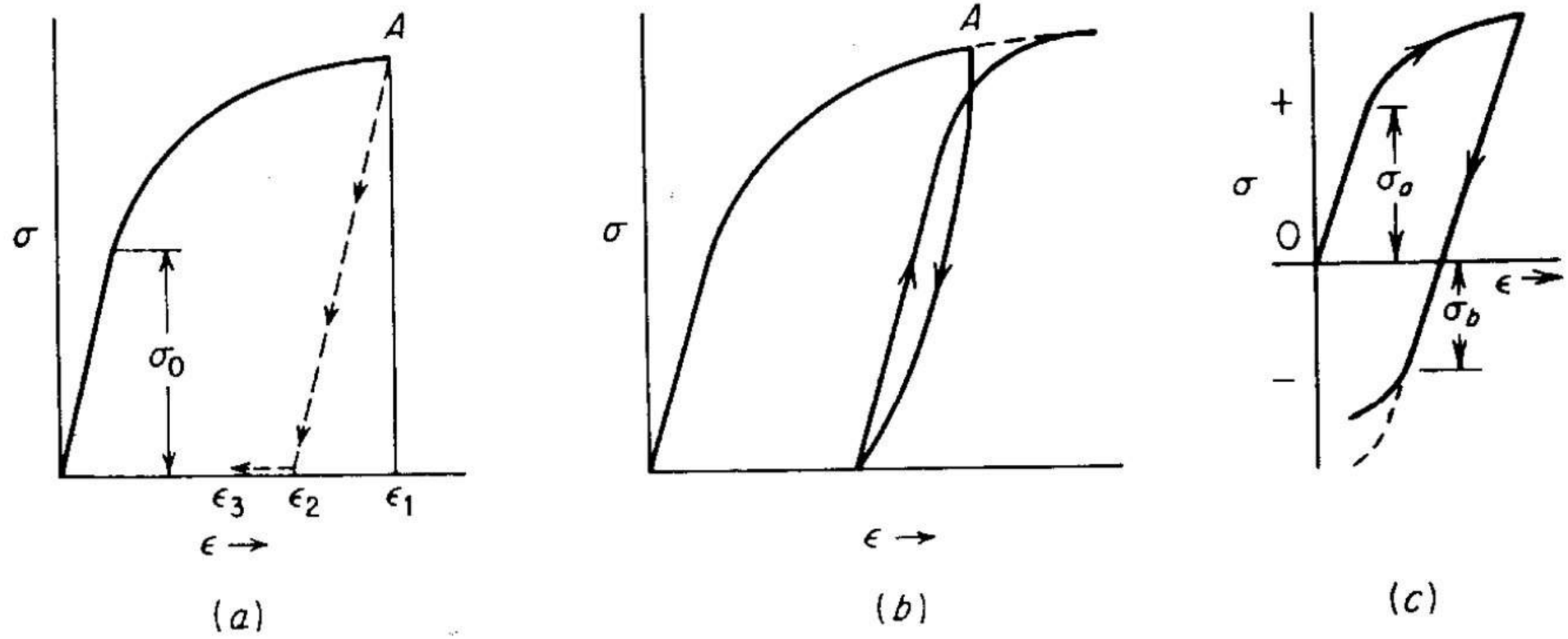

A true stress-strain curve is frequently called a *flow curve* because it gives the stress required to cause the metal to flow plastically to any given strain. Many attempts have been made to fit mathematical equations to this curve. The most common is a power expression of the form

$$\sigma = K\varepsilon^n \tag{3-1}$$

where K is the stress at $\varepsilon = 1.0$ and n, the strain-hardening coefficient, is the slope of a log-log plot of Eq. (3-1). This equation can be valid only from the beginning of plastic flow to the maximum load at which the specimen begins to neck down.

TRUE STRESS AND TRUE STRAIN

$$e = \frac{\Delta L}{L_0} = \frac{1}{L_0}\int_{L_0}^{L} dL$$

This definition of strain is satisfactory for elastic strains where ΔL is very small. However, in plastic deformation the strains are frequently large, and during the extension the gage length changes considerably. Ludwik[1] first proposed the definition of true strain, or natural strain, ε, which obviates this difficulty. In this definition of strain the change in length is referred to the instantaneous gage length, rather than to the original gage length.

$$\varepsilon = \sum \frac{L_1 - L_0}{L_0} + \frac{L_2 - L_1}{L_1} + \frac{L_3 - L_2}{L_2} + \cdots$$

or

$$\varepsilon = \int_{L_0}^{L} \frac{dL}{L} = \ln \frac{L}{L_0}$$

The relationship between true strain and conventional linear strain[1] follows from Eq. (1-1).

$$e = \frac{\Delta L}{L_0} = \frac{L - L_0}{L_0} = \frac{L}{L_0} - 1$$

$$e + 1 = \frac{L}{L_0}$$

$$\varepsilon = \ln \frac{L}{L_0} = \ln(e + 1) \tag{3-4}$$

Values of true strain and conventional linear strain are given for comparison:

True strain ε	0.01	0.10	0.20	0.50	1.0	4.0
Conventional strain e	0.01	0.105	0.22	0.65	1.72	53.6

True stress is the load at any instant divided by the cross-sectional area over which it acts. The *engineering stress*, or conventional stress, is the load divided by the original area. In considering elastic behavior it was not necessary to make this distinction, but in certain problems in plasticity, particularly when dealing with the mathematics of the tension test (Chap. 8), it is important to distinguish between these two definitions of stress. True stress will be denoted by the familiar symbol σ, while engineering stress will be denoted by s.

True stress $$\sigma = \frac{P}{A} \tag{3-7}$$

Engineering stress $$s = \frac{P}{A_0} \tag{3-8}$$

The true stress may be determined from the engineering stress as follows:

$$\sigma = \frac{P}{A} = \frac{P}{A_0}\frac{A_0}{A}$$

But, by the constancy-of-volume relationships

$$\frac{A_0}{A} = \frac{L}{L_0} = e + 1$$

$$\therefore \quad \sigma = \frac{P}{A_0}(e + 1) = s(e + 1) \tag{3-9}$$

Comparison of engineering and true stress-strain curve. [Hosford & Caddell, 1983]

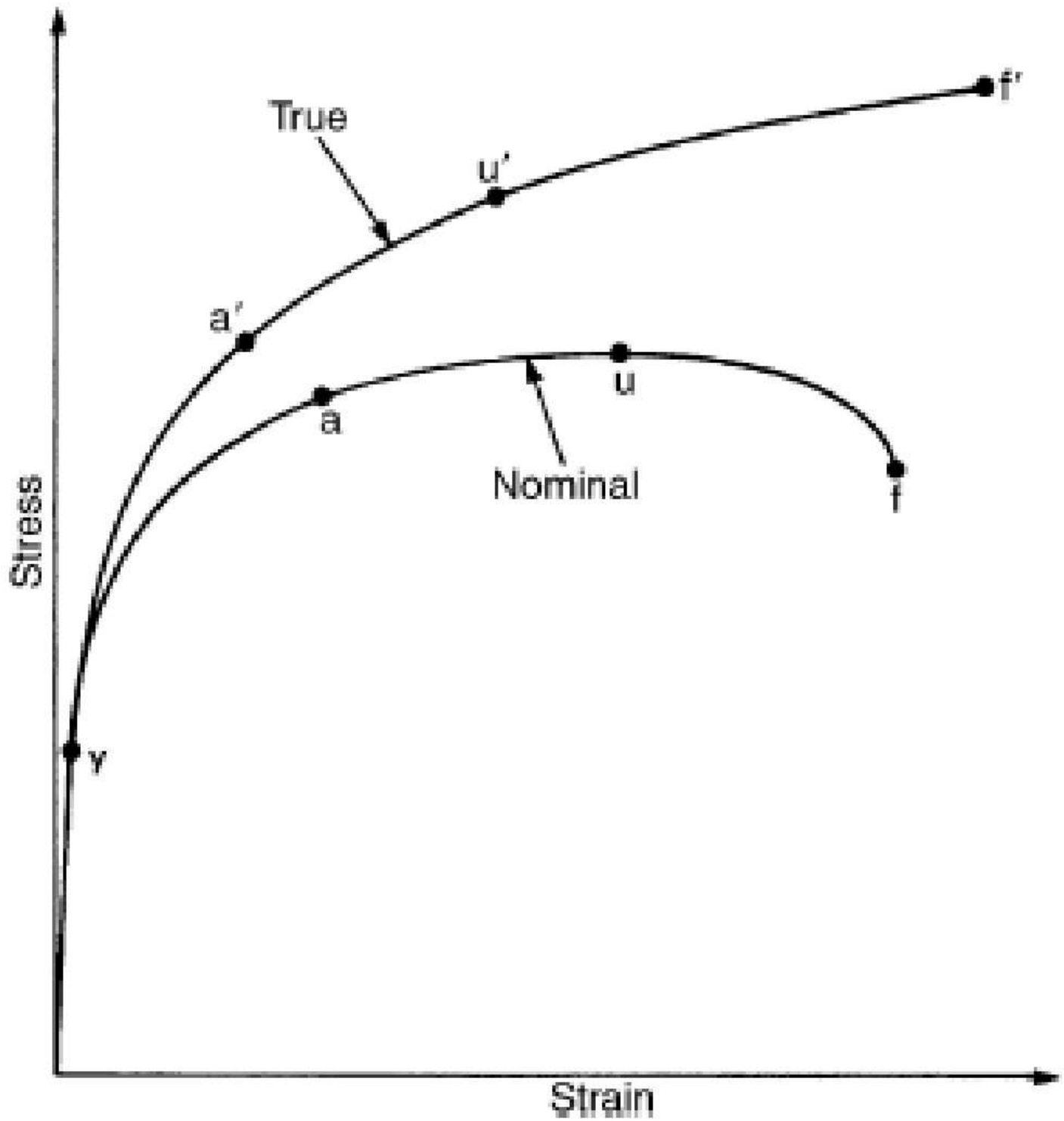

Example A tensile specimen with a 12 mm initial diameter and 50 mm gage length reaches maximum load at 90 kN and fractures at 70 kN. The minimum diameter at fracture is 10 mm. Determine the engineering stress at maximum load (the ultimate tensile strength) and the true fracture stress.

$$\text{Engineering stress at maximum load} = \frac{P_{max}}{A_{max}} = \frac{90 \times 10^3}{\pi(12 \times 10^{-3})^2/4} = \frac{90 \times 10^3}{113 \times 10^{-6}} = 796 \text{ MPa}$$

$$\text{True fracture stress} = \frac{P_f}{A_f} = \frac{70 \times 10^3}{\pi(10 \times 10^{-3})^2/4} = \frac{70 \times 10^3}{78 \times 10^{-6}} = 891 \text{ MPa}$$

Determine the true strain at fracture

$$\varepsilon_f = \ln \frac{A_0}{A_f} = \ln \left(\frac{12}{10}\right)^2 = 2 \ln 1.2 = 2(0.182) = 0.365$$

What is the engineering strain at fracture?

$$\varepsilon = \ln (1 + e); \qquad \exp(\varepsilon) = (1 + e); \qquad \exp(0.365) = 1 + e_f$$

$$\varepsilon_f = 1.44 - 1.00 = 0.44$$

Representation of data in tensile test. (a) Engineering stress strain curve. (b) True stress-strain curve. (c) Schematic of dimensional change of the specimen during the test. [Thomsen et al., 1965]

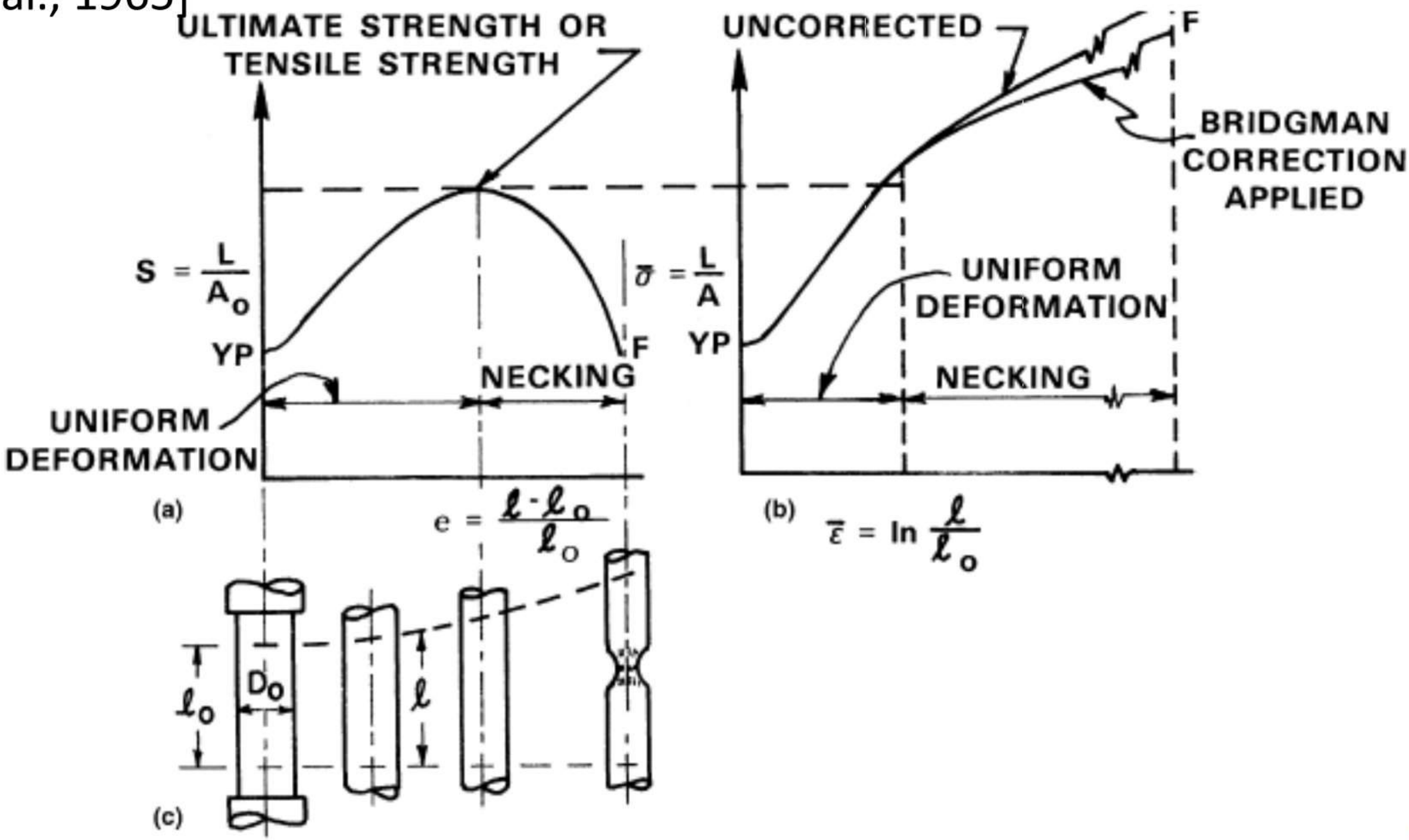

For studying the plastic deformation behavior of a metal it is appropriate to consider homogeneous or uniform deformation conditions. The yield stress of a metal under uniaxial conditions, as a function of strain, strain rate, and temperature, can also be considered as the "flow stress." The metal starts flowing or deforming plastically when the applied stress (in uniaxial tension without necking and in uniaxial compression without bulging) reaches the value of the yield stress or flow stress. The flow stress is very important because in metal forming processes the loads and stresses are dependent on (a) the part geometry, (b) friction, and (c) the flow stress of the deforming material.

The flow stress of a metal is influenced by:

Factors unrelated to the deformation process,
such as chemical composition, metallurgical structure, phases, grain size, segregation, and prior strain history

Factors explicitly related to the deformation process,
such as temperature of deformation, degree of deformation or strain, and rate of deformation or strain rate

$$\sigma = f(\theta, \varepsilon, \dot{\varepsilon})$$

Temperature in Metal Forming

✓For any metal, *K and n in the flow curve depend on* Temperature

✓Both strength and strain hardening are reduced at higher temperatures.

✓In addition, ductility is increased at higher temperatures

✓Any deformation operation can be accomplished with lower forces and power at elevated temperature

Three temperature ranges in metal forming:

- ✓Cold working
- ✓Warm working
- ✓Hot working

Cold Working

- ✓Performed at room temperature or slightly above
- ✓Many cold forming processes are important mass production operations
- ✓Minimum or no machining usually required
- ✓These operations are *near net shape or net shape* processes

Advantages of Cold Forming vs. Hot Working

- ✓Better accuracy, closer tolerances
- ✓Better surface finish
- ✓Strain hardening increases strength and hardness
- ✓Grain flow during deformation can cause desirable directional properties in product
- ✓No heating of work required

Disadvantages of Cold Forming

✓Higher forces and power required

✓Surfaces of starting workpiece must be free of scale and dirt

✓Ductility and strain hardening limit the amount of forming that can be done

✓In some operations, metal must be annealed to allow further deformation

✓In other cases, metal is simply not ductile enough to be cold worked

Warm Working

✓Performed at temperatures above room temperature but below recrystallization temperature

✓Dividing line between cold working and warm working often expressed in terms of melting point:

✓0.3*Tm, where Tm = melting point (absolute* temperature) for metal

Advantages of Warm Working

- ✓Lower forces and power than in cold working
- ✓More intricate work geometries possible
- ✓Need for annealing may be reduced or eliminated

Hot Working

✓Deformation at temperatures above *recrystallization temperature*

✓Recrystallization temperature = about one-half of melting point on absolute scale

✓In practice, hot working usually performed somewhat above 0.5*Tm*

✓Metal continues to soften as temperature increases above 0.5*Tm, enhancing advantage of* hot working above this level

Why Hot Working?

✓Capability for substantial plastic deformation of the metal - far more than possible with cold working or warm working

•Why?

✓Strength coefficient is substantially less than at room temperature

✓Strain hardening exponent is zero (theoretically)

✓Ductility is significantly increased

Advantages of Hot Working vs. Cold Working

✓Workpart shape can be significantly altered

✓Lower forces and power required

✓Metals that usually fracture in cold working can be hot formed

✓Strength properties of product are generally isotropic

✓No strengthening of part occurs from work hardening

✓Advantageous in cases when part is to be subsequently processed by cold forming

Disadvantages of Hot Working

- ✓Lower dimensional accuracy
- ✓Higher total energy required (due to the thermal energy to heat the workpiece)
- ✓Work surface oxidation (scale), poorer surface finish
- ✓Shorter tool life

Strain Rate Sensitivity

✓Theoretically, a metal in hot working behaves like a perfectly plastic material, with strain hardening exponent $n = 0$

✓The metal should continue to flow at the same flow stress, once that stress is reached

✓However, an additional phenomenon occurs during deformation, especially at elevated temperatures: *Strain rate sensitivity*

What is Strain Rate?

✓Strain rate in forming is directly related to speed of deformation *v*

✓Deformation speed *v* = *velocity of the ram or other* movement of the equipment

Strain rate is defined: $\dot{\varepsilon} = v/h$

where *v* = true strain rate; and *h* = *instantaneous height* of workpiece being deformed

Evaluation of Strain Rate

✓In most practical operations, valuation of strain rate is complicated by

- Workpart geometry
- Variations in strain rate in different regions of the part

✓Strain rate can reach 1000 s-1 or more for some metal forming operations

Effect of Strain Rate on Flow Stress

- ✓Flow stress is a function of temperature
- ✓At hot working temperatures, flow stress also depends on strain rate
- ✓As strain rate increases, resistance to deformation increases
- ✓This effect is known as *strain-rate sensitivity*

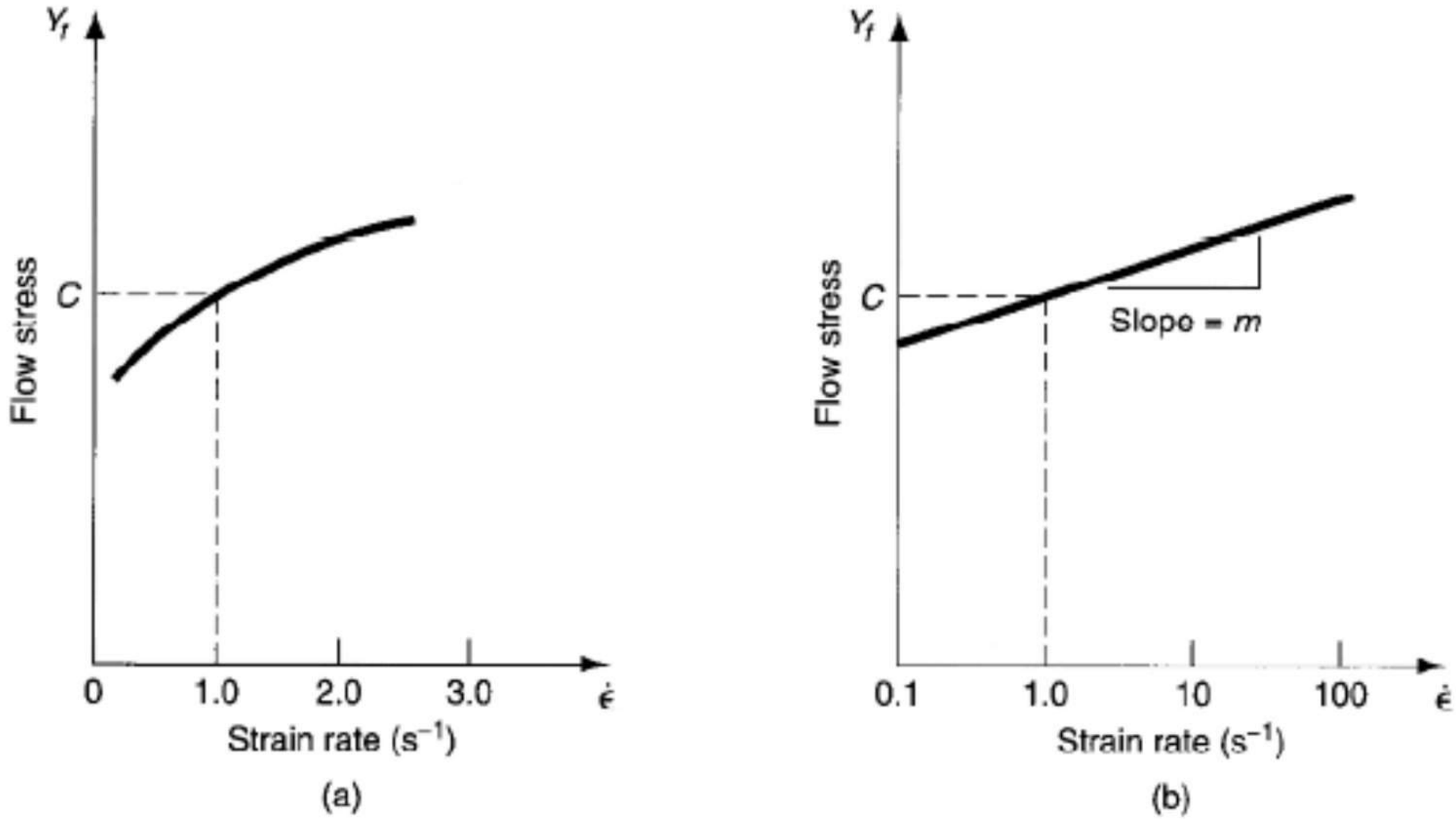

Figure 18.5 - (a) Effect of strain rate on flow stress at an elevated work temperature. (b) Same relationship plotted on log-log coordinates

Strain Rate Sensitivity Equation

$$Y_f = C\dot{\varepsilon}^m$$

where C = *strength constant (similar but not equal to* strength coefficient in flow curve equation), and m = strain-rate sensitivity exponent

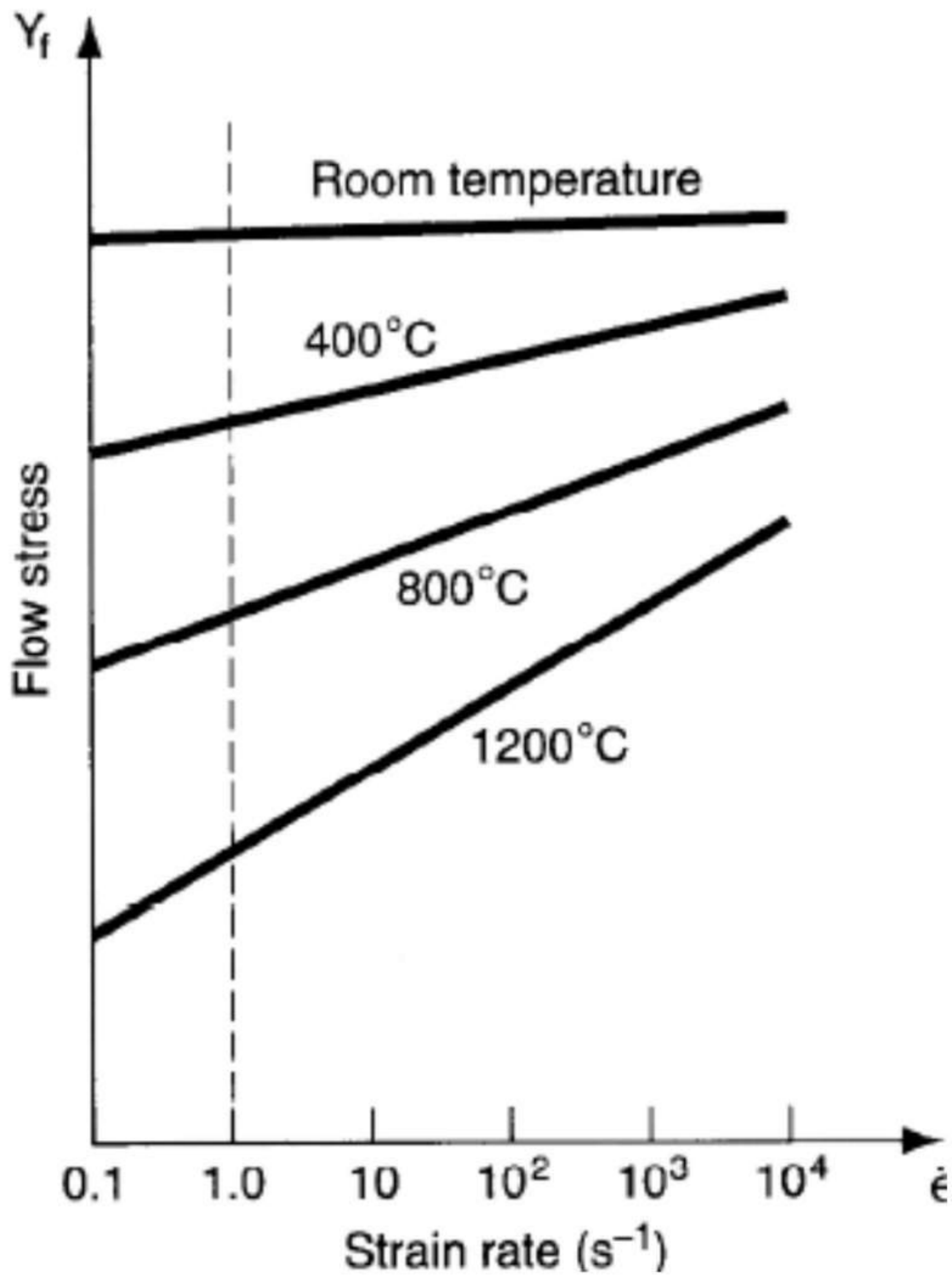

Figure 18.6 - Effect of temperature on flow stress for a typical metal. The constant *C in Eq. (18.4),* indicated by the intersection of each plot with the vertical dashed line at strain rate = 1.0, decreases, and *m* (slope of each plot) increases with increasing temperature

Observations about Strain Rate Sensitivity

✓Increasing temperature decreases *C, increases m*

✓At room temperature, effect of strain rate is almost negligible

✓Flow curve is a good representation of material behavior

✓As temperature increases, strain rate becomes increasingly important in determining flow stress

Friction in Metal Forming

✓In most metal forming processes, friction is undesirable:

- Metal flow is retarded
- Forces and power are increased
- Wears tooling faster

- Friction and tool wear are more severe in hot working

Lubrication in Metal Forming

✓Metalworking lubricants are applied to tool-work interface in many forming operations to reduce harmful effects of friction

✓Benefits:

- Reduced sticking, forces, power, tool wear
- Better surface finish
- Removes heat from the tooling

Considerations in Choosing a Lubricant

- ✓Type of forming process (rolling, forging, sheet metal drawing, etc.)
- ✓Hot working or cold working
- ✓Work material
- ✓Chemical reactivity with tool and work metals
- ✓Ease of application
- ✓Cost

Categories	Temp. Range	Strain-rate Sensitivity exponent	Coefficient of Friction
Cold Working	$<0.3T_m$	$0<m<0.05$	0.1
Warm Working	$0.3T_m$-$0.5T_m$	$0.05<m<0.1$	0.2
Hot Working	$0.5T_m$-$0.75T_m$	$0.05<m<0.4$	0.4-0.5

Deformation Zone

✓Deformation is accomplished only at separate section of the billet during many processes of metal forming.

✓This section is called deformation zone (for instance during the drawing, rolling and some operations of free forging and others).

✓Non-deformable parts of the billet bordering the deformation zone are called fringe zones or rigid ends.

✓The fringe zones influence on metal flow in the deformation zone and on the deformation force.

✓Significant deformations of shear and cut are taking place at the borders of deformation zone with the fringe zones resisting additionally during the reduction of the metal in deformation zone.

✓Irregularity of deformation is reducing under the action of external zones.

✓The influence of the fringe zones on the processes in the deformation zone depends upon the shape of deformation zone, which is characterized by the ratio *ld/hav (ld – the length of deformation zone; hav – the average height of deformation zone).*

✓*The workable metal is divided conditionally as per value of ratio ld/hav for thick strip (ld/hav<1), medium thickness strip (ld/hav=1) and thin strip (ld/hav>1).*

✓The metal under the action of friction forces on the contact is drawing into the driven rolls rotating in opposite sides during the rolling.

✓The thickness of the strip is being reduced while passing between the rolls, and the length and width increase.

✓The metal is plastically deformed non-simultaneously along its whole length, but only at some area, which is called zone of deformation.

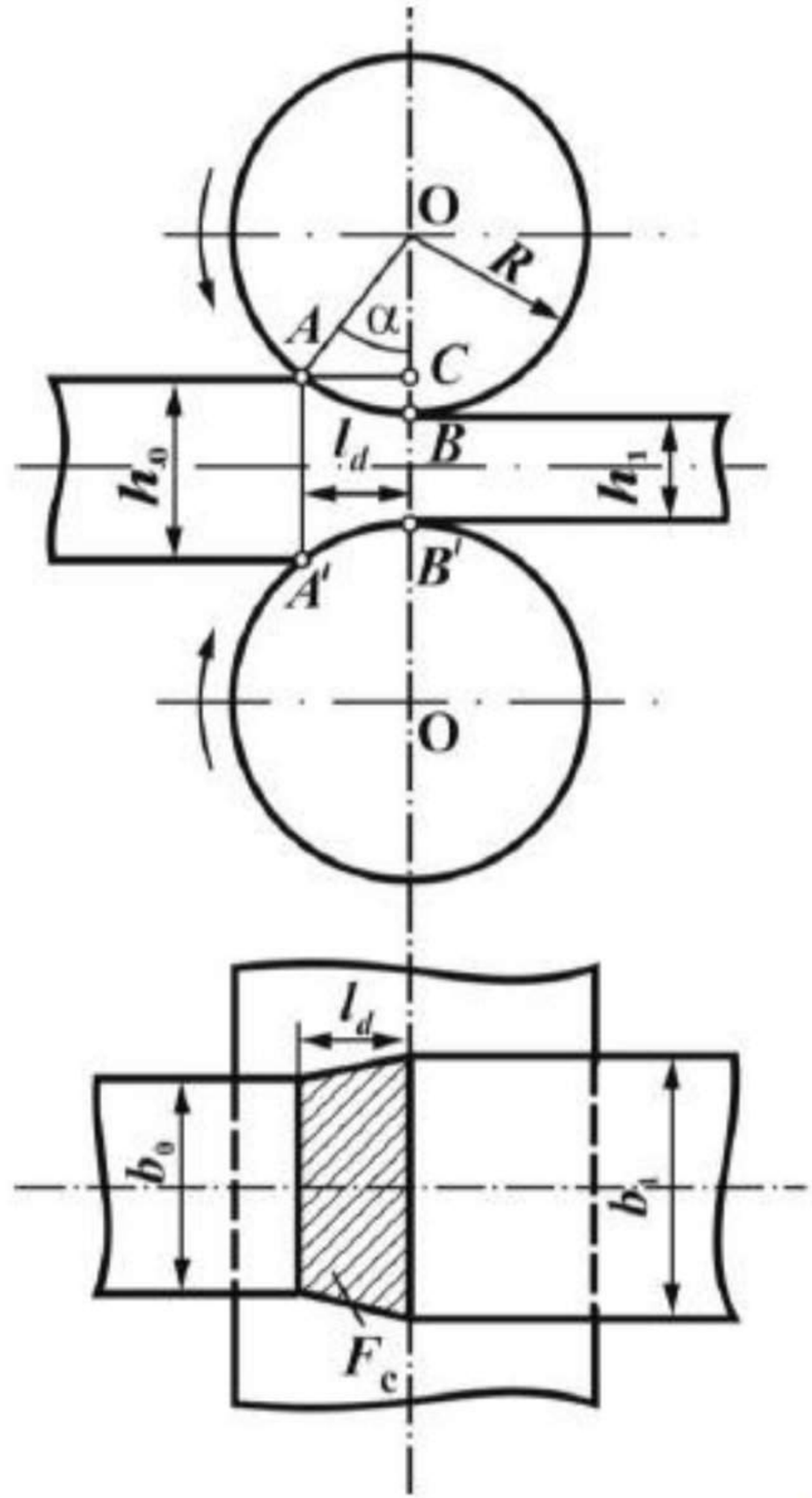

✓The zone of deformation is identified as the metal volume *ABB'A' locating between the rolls and bordered by the planes of entry AA' and exit BB' (Fig. 2.1).*

✓*That is so-called geometrical zone of deformation.*

✓*The parts of the strip bordering the zone of deformation, but not deformed at this moment are called external zones or rigid ends.*

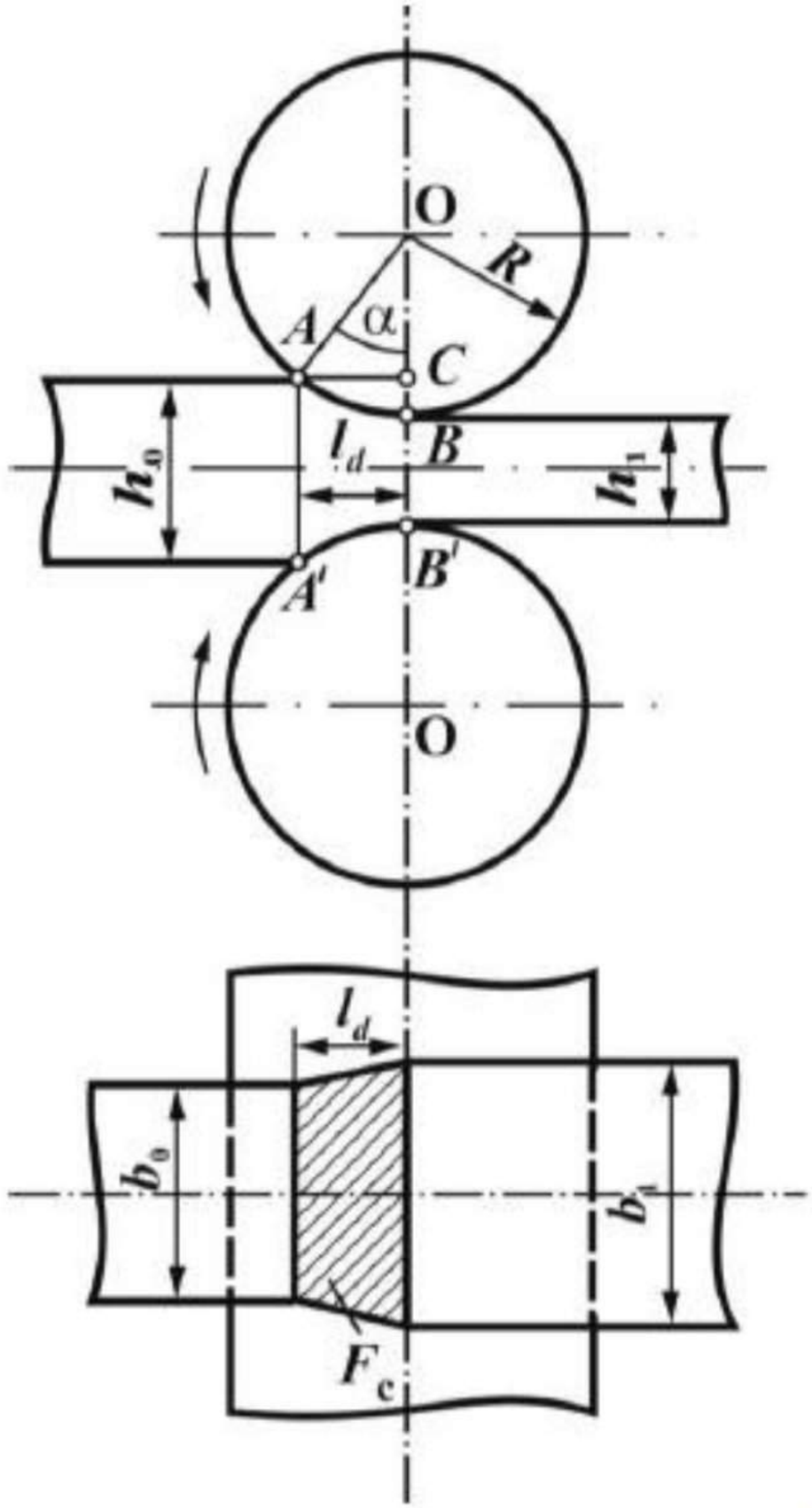

Workability

✓Workability, forgeability, or formability is the capability of the material to deform without failure;

✓it depends on (a) conditions existing during deformation processing (such as temperature, rate of deformation, stresses, and strain history) and (b) material variables (such as composition, voids, inclusions, and initial microstructure).

✓In hot forging processes, temperature gradients in the deforming material (for example, due to local die chilling) also influence metal flow and failure phenomena.

Residual stresses

✓**Residual stresses** are stresses that remain in a solid material after the original cause of the stresses has been removed.

✓Residual stresses can occur through a variety of mechanisms including inelastic (plastic) deformations, temperature gradients (during thermal cycle) or structural changes (phase transformation).

✓ Heat from welding may cause localized expansion, which is taken up during welding by either the molten metal or the placement of parts being welded.

Forging Presses

The three main types of forging presses used for press forging are listed below:

✓Mechanical Press – converts the rotation of the motor into linear motion of the ram.
Mechanical presses are used for large series production - usually 10 to 30 000 pieces per month. They are suitable to any material, bur are preferably assigned the manufacture of automotive or truck steel components.

✓Hydraulic Press – hydraulic motion of the piston moves the ram.
Hydraulic presses are used particularly for the manufacture of aluminium components, and heavy steel or titanium components.

✓Screw press – screw mechanism actuates the ram movement.
Screw presses are used for medium series production

Advantages of Press Forging

The advantages that press forging offers over impact of drop forging are listed below:

- ✓ Deforms the work piece completely
- ✓ Compression rate of the work piece can be controlled
- ✓ More economical for high volume productions
- ✓ Any size and shape can be created
- ✓ Requires less draft and produces lesser scrap.

	Hydraulic press	Mechanical press	Screw press
Power range	~ 1 000T to 10 000T	~ 300T to 16 000T	~ 500T to 18 000T
Forging rate	Slow	High	Average / high
Size of production batches	Small batches Bigger batches on small parts	**High quantities**	Average and high quantities
Forging speed	Average, but adjustable and programable	Fast, but without impact	Very high, but with an average impact
Adaptability to shape	Good	Good	Average
Adaptability to Material	**Very good (all kind of material)**	Steel (acceptable for small aluminium parts)	Good (excellent for titanium alloys and small parts)

Forging Hammers

It is a type of the mechanical equipment that provides a physical deformation and a change of material due to its energy of shock impact. For this purpose, the kinetic energy arising in case of vertical falling of a hammer on a processed material is used. The pneumatic, steam-air or hydraulic power systems are often applied to increase its impact forces.

Types of forging hammers:

- Pneumatic forging hammers;
- hydraulic forging hammers;

Forging Hammers

- Power-operated forging hammers;

Power drop **hammers** use the force of pressurized air or steam to raise the ram, and to accelerate it downward to strike the **work**. **Power** drop **hammers** can accelerate the ram downward to a higher speed than conventional drop **forging** machine tools, they can also accommodate a more massive ram

- CNC(computer numerical control) hydraulic die forging hammers

✓Forging hammers are used in the drop forging to form the metal between two dies.

✓The first half of the die is attached to the anvil and the second part to the hammer.

✓The material is placed in the lower die and then hammered with the upper one until the hot metal flows in all directions, filling the die cavity.

✓Drop forging is the first industrial process which had been developed for closed die forging, before the introduction of presses.

✓Hammers use impact strain to deform the material. The ram is thrusted into the workpiece with a speed of more than 1/1,5 m/sec by sequence of several continuous blows on the same die;

✓However, automatic hammers have been developed to produce automotive parts in big series such as connecting rods for automotive and trucks engines.

✓Hammers are particularly suited to the forging of thin components (such as con rods, airfoils) and heavy parts, made of steel, Ni-based alloys or titanium.

✓on the contrary - forging presses need only 1 to 2 strokes. Hammers are characterised by the energy produced in each blow (stroke), which is indicated in J, kJ and kg-m.

✓A hammer of 250 kJ (25 000 kgm) produces on each blow an energy equivalent of the drop of a mass of 25 metric tons from 1 m height.

✓Hammers are classified in single effect (drop forging), double effect and counterblow hammers, depending on the drive of the ram movement.

✓These are very flexible and polyvalent tools, and therefore dedicated mostly to small and medium series production.

Forging - Open-Die Forging

✓Open die forging is the process of deforming a piece of metal between multiple dies that do not completely enclose the material.

✓Open-die forging is a drop forging where a hammer strikes and deforms the metal, which is placed on a hammer anvil or a press bed.

✓Open-die forging is distinguished by the fact that the forgings are produced on flat dies and the initial material is never completely enclosed by the die.

✓This manufacturing technique is the best choice for custom-designed components with excellent mechanical properties and structural integrity.

✓Products formed through open forging often need secondary machining and refining to achieve the tolerances required for the finished specifications.

✓Open die forging is widely used for the products in small quantity that are simple, rather than complex, such as discs, rings, sleeves, cylinders and shafts.

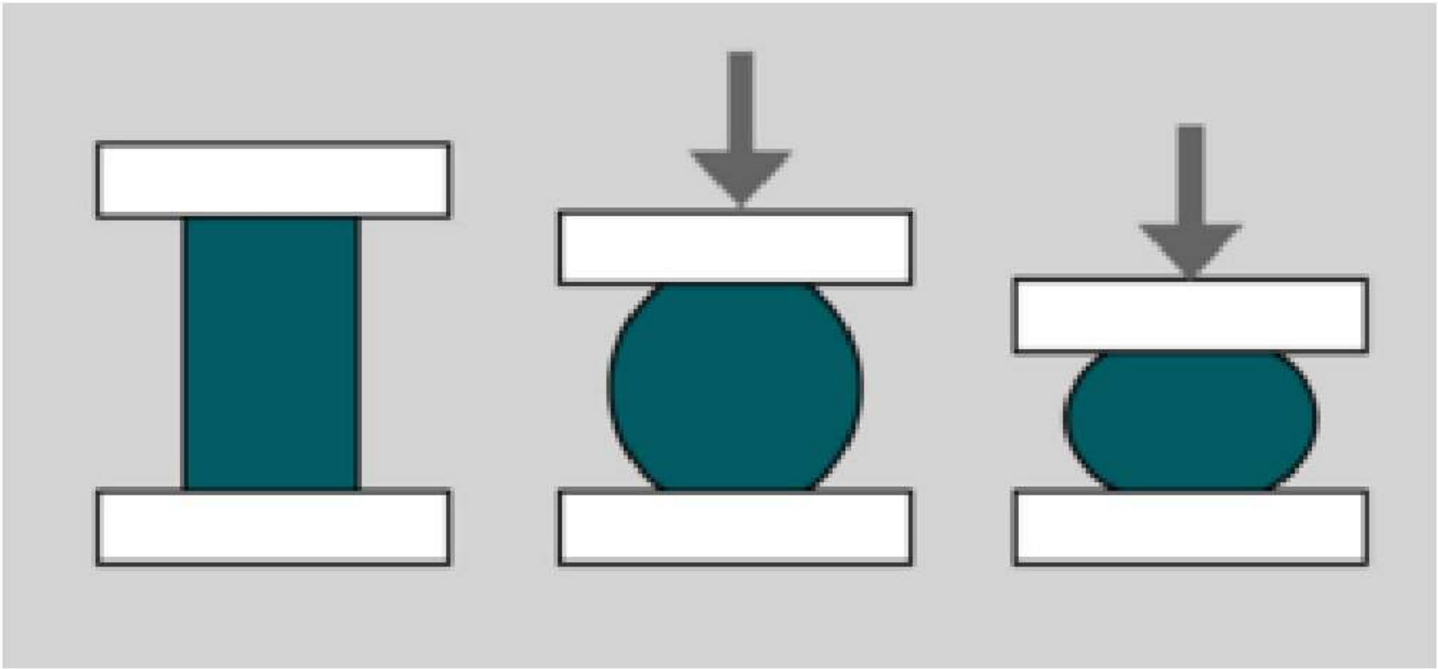

- ✓Custom shapes can also be produced with open die forging.
- ✓The strength of the grain structure will be increased during the deformation process due to the repeated working of the steel billet.
- ✓Another benefit of open die forging is that the fatigue resistance and strength of products will be improved.
- ✓Besides, voids could be effectively reduced after open die forging.

Closed-Die Forging with Flash

Definition. In this process, a billet is formed (hot) in dies (usually with two halves) such that the flow of metal from the die cavity is restricted.

✓The excess material is extruded through a restrictive narrow gap and appears as flash around the forging at the die parting line.

✓**Equipment. Anvil and counterblow hammers,** hydraulic, mechanical, and screw presses.

✓**Materials. Carbon and alloy steels, aluminum** alloys, copper alloys, magnesium alloys, beryllium, stainless steels, nickel alloys, titanium and titanium alloys, iron and nickel and cobalt superalloys, niobium and niobium alloys, tantalum and tantalum alloys, molybdenum and molybdenum alloys, tungsten alloys.

✓**Process Variations. Closed-die forging with** lateral flash, closed-die forging with longitudinal flash, closed-die forging without flash.

✓**Application. Production of forgings for automobiles,** trucks, tractors, off-highway equipment, aircraft, railroad and mining equipment, general mechanical industry, and energy-related engineering production

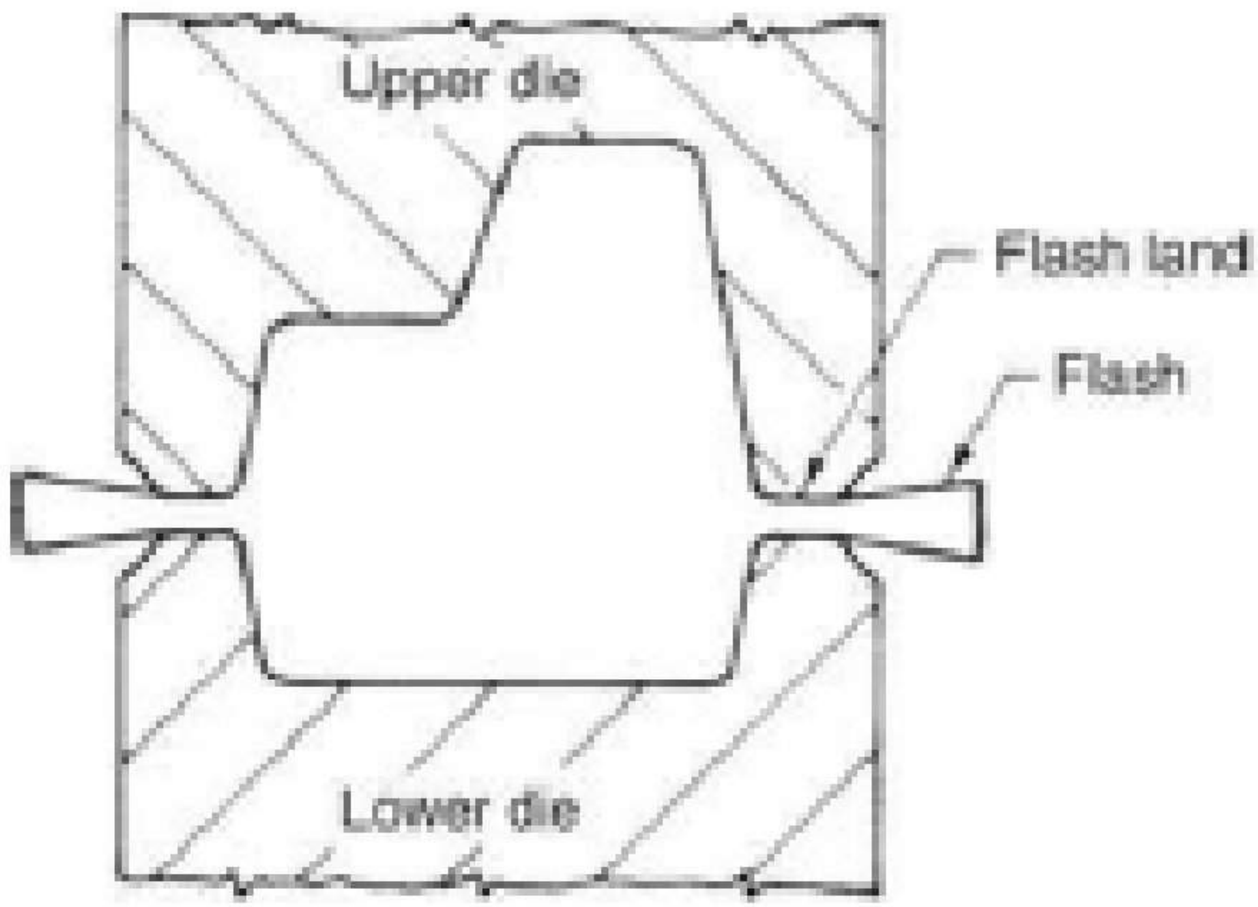

Forging without Flash

Definition. In this process, a billet with carefully controlled volume is deformed (hot or cold) by a punch in order to fill a die cavity without any loss of material. The punch and the die may be made of one or several pieces.

Equipment. Hydraulic presses, multiram mechanical presses.

Materials. Carbon and alloy steels, aluminum alloys, copper alloys.

Process Variations. Core forging, precision forging, cold and warm forging, P/M forging.

Application. Precision forgings, hollow forgings, fittings, elbows, tees, etc.

✓Closed die forging process, is also referred to as impression die forging.

✓It utilizes high pressure to compress the metal piece to fill an enclosed die impression for required shapes.

✓A medium frequency induction heating furnace is used to heat the metal for pressing into dies

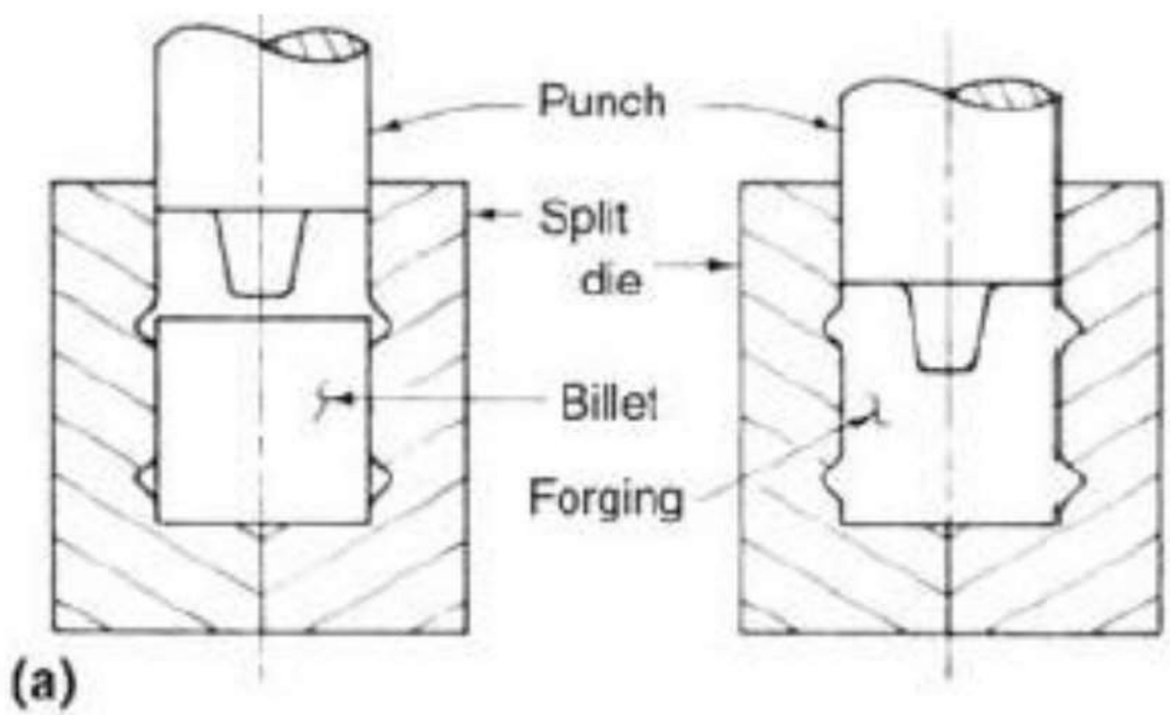

Advantages

Open Die Forging

✓Better fatigue resistance and improved microstructure.

✓Continuous grain flow and finer grain size.

✓Increased strength and longer part life.

✓Less material waste

✓Reduced chance of voids

✓Valuable cost savings

Closed Die Forging

✓The internal grain structure formation increases the tightness and strength of the products.

✓Economic for large production runs.

✓No material limitation

✓Better surface finish

✓Less or no machining required for its close tolerances.

✓Dimensions of tighter tolerances and net shapes can be achieved

Disadvantages

Open Die Forging

✓It is not capable of forming close tolerance and higher precision parts.

✓Machining is often required to achieve desired dimensions

Closed Die Forging

✓It is not very economical for short runs due to the high cost of die production.

✓Closed die forging presents a dangerous working environment

Die Design, Materials, and Manufacturing

✓The design and manufacture of dies and the selection of the die materials are very important in the production of discrete parts by forging.

✓The dies must be made by modern methods from appropriate die materials in order to provide acceptable die life at a reasonable cost.

✓Often, the economic success of a forging process depends on die life and die costs per piece produced.

✓For a given application, selection of the appropriate die material depends on three variables

- Variables related to the process itself, including factors such as:

✓ size of the die cavity

✓ type of machine used

✓ deformation speed

✓ initial stock size and temperature

✓ die temperature to be used

✓ lubrication, production rate, and

✓ number of parts to be produced

- Variables related to the type of die loading, including

✓speed of loading, i.e., impact or gradual contact time between dies and deforming metal (this contact time is especially important in hot forging),

✓maximum load and pressure on the dies,

✓maximum and minimum die temperatures, and

✓number of loading cycles to which dies will be subjected

- Mechanical properties of the die material, including

✓ hardenability

✓ impact strength

✓ Hot strength (if hot forming is considered), and

✓ resistance to thermal and mechanical fatigue

Die materials commonly used for hot forging can be grouped in terms of alloy content

Group	Identifying symbol
Water-hardening tool steels	W
Shock-resisting tool steels	S
Oil-hardening cool work tool steels	O
Air-hardening, medium-alloy cold work tool steel	A
High-carbon, high-chromium cold work tool steels	D
Mold steels	P
Hot work tool steels, chromium, tungsten, and molybdenum	H
Tungsten high-speed tool steels	T
Molybdenum high-speed tool steels	M

✓Hot work die steels are used at temperatures of 600 to 1200 F (315 to 650 C).

✓ Hot work die steels contain chromium, tungsten, and, in some cases, vanadium or molybdenum or both.

✓These elements induce deep hardening characteristics and resistance to abrasion and softening.

✓ Generally, these steels are hardened by quenching in air or molten salt baths.

The chromium-base steels contain 5% Cr. (Table 21.4).

- ✓High molybdenum content gives these steels high resistance to softening;
- ✓Vanadium content increases resistance to heat checking and abrasion.
- ✓Tungsten improves toughness and hot hardness;
- ✓However, steels containing tungsten are not resistant to thermal shock and cannot be cooled intermittently with water.

Critical die-related factors and corresponding properties in the die material used in hot forging

Critical die-related factor	Critical properties in die material
Heat checking	Hot strength (hot hardness)
	Tempering resistance
	Toughness/ductility
	Thermal expansion
	Thermal conductivity
Gross cracking	Toughness/ductility
Erosion	Hot strength (hot hardness)
	Chemical resistance
Plastic deformation	Hot strength (hot hardness)
	Tempering resistance

Table 21.4 Chromium-base hot work die steels [Altan et al., 1983]

Designation (ASM)	Nominal composition, %								
	C	Mn	Si	Co	Cr	Mo	Ni	V	W
H10	0.40	0.40	1.00	...	3.30	2.50	...	0.50	...
H11	0.35	0.30	1.00	...	5.00	1.50	...	0.40	...
H12	0.35	0.40	1.00	...	5.00	1.50	...	0.50	1.50
H13	0.38	0.30	1.00	...	5.25	1.50	...	1.00	...
H14	0.40	0.35	1.00	...	5.00	...	...	...	5.00
H19	0.40	0.30	0.30	4.25	4.25	0.40	...	2.10	4.10

Table 21.5 Tungsten-base hot work die steels [Altan et al., 1983]

Designation (ASM)	Nominal composition, %								
	C	Mn	Si	Co	Cr	Mo	Ni	V	W
H21	0.30	0.30	0.30	. . .	3.50	. . .	. . .	0.45	9.25
H22	0.35	0.30	0.30	. . .	2.00	. . .	. . .	0.40	11.00
H23	0.30	0.30	0.30	. . .	12.00	. . .	. . .	1.00	12.00
H24	0.45	0.30	0.30	. . .	3.00	. . .	. . .	0.50	15.00
H25	0.25	0.30	0.30	. . .	4.0	. . .	. . .	0.50	15.00
H26	0.50	0.30	0.30	. . .	4.0	. . .	. . .	1.00	18.00

Properties of materials that determine their selection as die materials for hot forging are

- Ability to harden uniformly
- Wear resistance (this is the ability of a die steel to resist the abrasive action of hot metal during forging)
- Resistance to plastic deformation (this is the ability of a die steel to withstand pressure and resist deformation under load)
- Toughness
- Ability to resist thermal fatigue and heat checking
- Ability to resist mechanical fatigue

Maraging Steels

Maraging steels are steels that have high nickel, cobalt, and molybdenum content but very little carbon.

These steels are mostly used in die casting and very rarely in forging.

Superalloys

Superalloys are based on nickel, cobalt, and iron.

They are resistant to thermal softening.

Their strength is due to the precipitation strengthening of intermetallic compounds.

Thus, these materials are used in selected forging applications even though they are expensive

Ceramic Dies

Some of the newer nonferrous alloys have marked improvements over the traditional die materials (Cr-Mo-V-base steels) used in hot forging.

For example, Nissan Motor Co. is using cermet dies in extrusion [Kesavapandian et al., 2001].

The material is composed of MoB (ceramic) and nickel (metal.) Boron improves resistance to oxidation at high temperatures.

The material is powder formed and sintered. Die life improvements over traditional materials.

Nickel Aluminides

Nickel aluminides are attractive because they derive their strength from their ordered microstructure instead of heat treatments.

Their yield strength increases with temperature up to about 1560 F (850 C), and they have excellent resistance to oxidation up to 1830 F (1000 C).

Information on the composition and properties of various nickel aluminides is available in the literature.

Heat Treatment

Heat treatment of die steels involves the following steps:

Austenitizing temperature of a hot work tool steel ranges from 1830 to 2730 F (1000 to 1500 C).

During this phase, the structure of steel transforms from a ferrite-pearlite structure to austenite.

The dies are held at these temperatures for a long time, which is called a “soak” or “hold” time, to convert the entire structure uniformly to austenite.

Carbides or alloying elements go into solution [Krauss et al., 1998 and Kesavapandian et al., 2001].

After soaking, the dies are quenched in a quench medium to a temperature below the transformation temperature.

Based on the cooling rate, the die transforms into different phases.

Martensite is the ideal final structure, but lower bainite, upper bainite, pearlite, or retained austenite can be present in the structure.

During tempering, the martensite is tempered to a tougher structure.

This can be done in several stages to maximize toughness without reducing hardness.

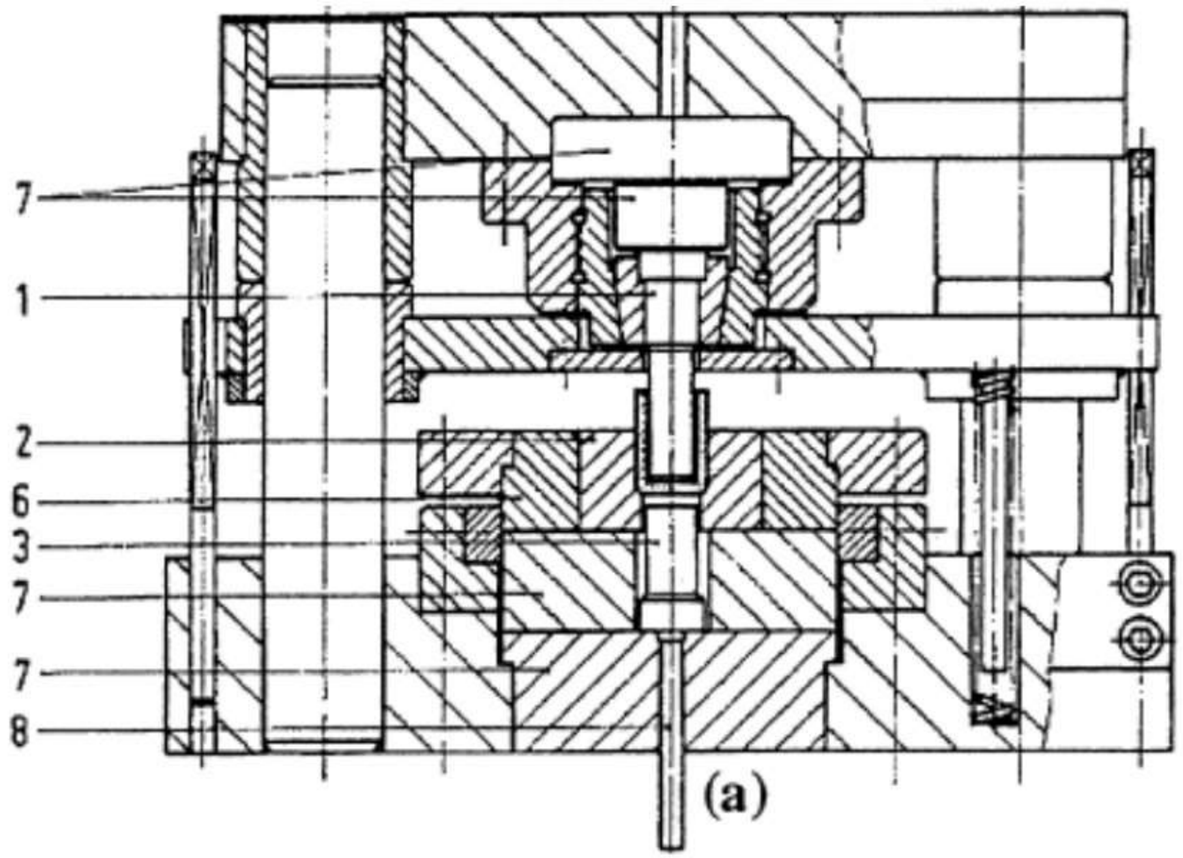

(a)

1.	Punch
2.	Die (Combined case and die insert) 2a. Die insert 2c. Container
3.	Counter Punch
4.	Heading punch/heading die
5.	Mandrel
6.	Stress ring(s)
7.	Pressure pad
8.	Ejector

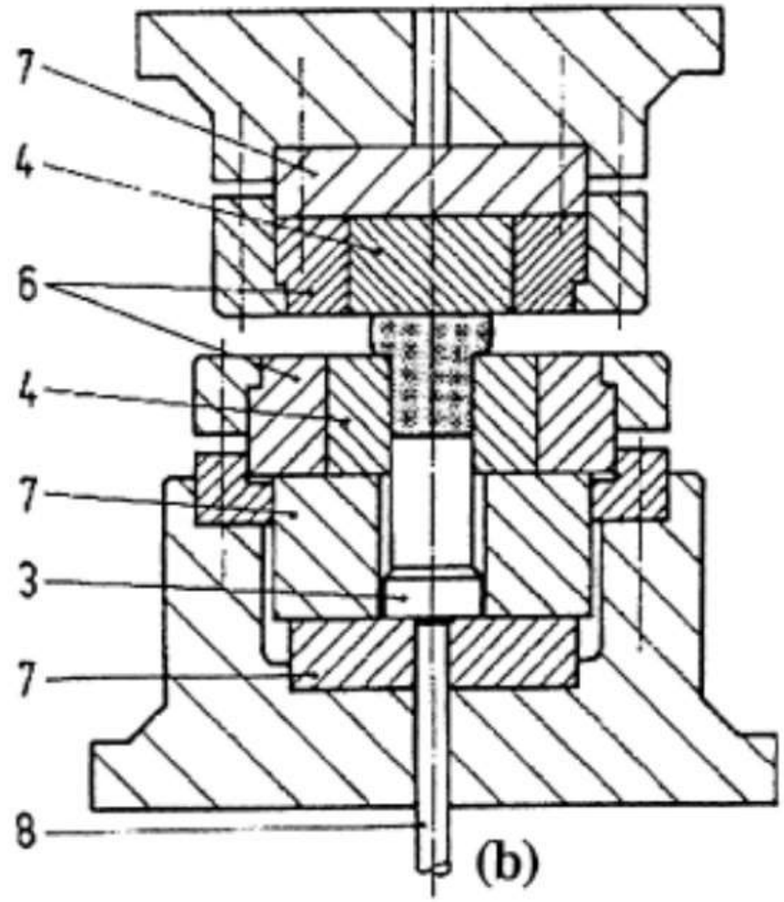

(b)

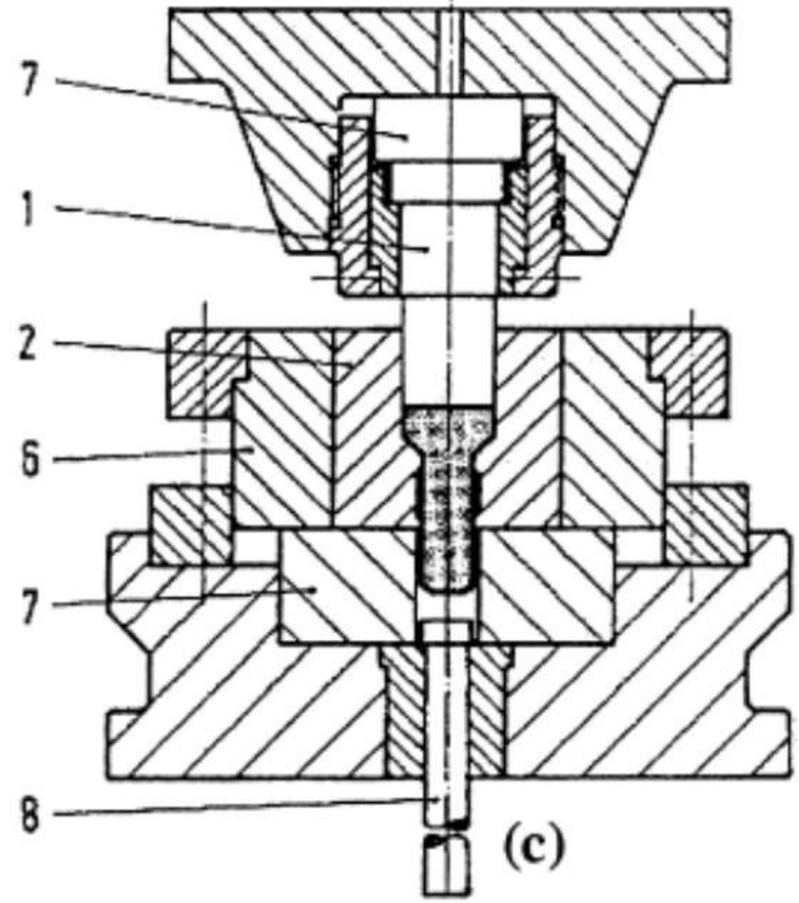

(c)

Tooling for Cold Forging

A tooling setup for cold forging is shown in Fig.

Punch

The punch is the portion of the tool that forms the internal surface of the workpiece in an extrusion, or that pushes the workpiece through a die in a rod, tube, or open-die extrusion.

Die, Die Insert, Container, Case
(Combined Case and Die Insert)

The die is the portion of the tool assembly that contains the workpiece and forms the external surfaces.

Normally, dies are reinforced by one or more stress rings.

Depending on the stress state, principaldesigns used in the industry are as follows:

Die

Die with one-piece insert

Die with axially split insert

Die with transversely split insert

Counter Punch

The counter punch forms the base shape and is usually used to eject the workpiece from the die.

Heading Punch/Heading Die

The heading punch upsets the head of the workpiece.

The heading die contains the shank and forms the underhead surface of the workpiece.

Choice of the tool material and its heat treatment depends on the compressive stresses (up to 300 ksi, or 2068 MPa, and more)

Mandrel (Pilot)

The mandrel or pilot is that part of the punch assembly that enters a hollow billet and forms the inside wall.

The mandrel is subjected to wearand high tensile stresses, and therefore, the choice of material is aimed at properties such as wear resistance and/or high yield strength.

Due to high tensile stresses, tool steels are normally used.

Stress Rings

The stress rings form the intermediate and outer portions of the die assembly to prevent the die from bursting.

The tensile stresses will amount to 200 ksi (1379 MPa) and more. Normally, tool steels are used.

Pressure Pads

The pressure pad is the block of material that supports and spreads the load behind the pad or die. Sufficient thickness is important in order to spread the load properly and to avoid bending.

An extreme degree of parallelism and squareness is essential.

The tool material should provide high compressive strength up to 220 ksi (1517 MPa). Normally, tool steels are used.

Ejector

The ejector is the part of the tooling that ejects the workpiece from the die, usually without taking part in the forming operation.

The choice of the material depends on the section used and the ejection pressure.

Normally, tool steels are used.

Prediction of Extrusion Loads from Model Test

If a strain-hardening material is considered and the friction at the tool/material interfaces of the deformation zone is neglected, the external mechanical energy is equal to the internal deformation energy

$$p_a A_0 v \Delta t = \int_v \sigma d\varepsilon dV$$

or

$$p_a V = \int_0^{\varepsilon_h} \sigma d\varepsilon$$

where, in addition to the symbols previously defined,
Pa is average punch pressure,
V is volume of deforming material,
v is punch velocity, and
Δt is time increment.
The left side of Eq 17.10 represents the amount of mechanical energy necessary for deformation.
This energy is introduced by the punch,
which moves at a velocity (v)
during the time (Δt)
necessary to extrude the volume of material equal to the volume of the deformation zone ($V = A_o v \Delta t$).

The right side of Eq 17.10 represents the total deformation energy obtained by adding the deformation energies consumed within each volume element in the deformation zone.

This total deformation energy can be calculated only if the flow stress, σ bar, and effective strain έ, at each volume element are known.

Since this information is not usually available, the following averaging method can be used.

Assuming that every volume element in the deformation zone has the same average strain, έ , and the same average flow stress, σa, then Eq can be written as

$$p_a V = \sigma_a \varepsilon_a V \qquad \text{(Eq 17.12)}$$

and $\bar{\sigma} = K\bar{\varepsilon}^n$ with Eq 17.12 gives:

$$p_a = K\varepsilon_a^{\,n+1} \qquad \text{(Eq 17.13)}$$

or

$$\varepsilon_a = \left(\frac{p_a}{K}\right)^{1/n+1} \qquad \text{(Eq 17.14)}$$

Equations 17.13 and 17.14 can be used for predicting extrusion pressures from a model test.

First, a model material (plasticine, aluminum, or mild steel) is extruded using certain tool geometry, and the extrusion pressure, pa, is measured.

By use of Eq. 17.14 and the known K and n values of the model material, the average strain, $\acute{\varepsilon}_a$ is calculated.

Then, the calculated values of $\acute{\varepsilon}_a$ and the K and n values of the real material are used with Eq 17.13 to estimate the real extrusion pressure.

Table 17.9 Comparison of measured and predicted (model test) punch pressures in backward extrusion of various steels (model material, hot rolled 1005 steel; $\bar{\sigma} = 86{,}000\bar{\varepsilon}^{0.25}$ psi)

	K				Measured pressure		Predicted pressure	
Steel	ksi	MPa	n	Reduction, %	ksi	MPa	ksi	MPa
8620, subcritical annealed	120	827	0.173	50	305	2103	304	2096
				60	309	2130	308	2124
				70	341	2351	334	2303
1038, annealed	134	924	0.255	50	304	2096	347	2392
				60	313	2158	357	2461
				70	327	2255	387	2668
1018, hot rolled	117	807	0.244	50	286	1972	300	2068
				60	293	2020	305	2103
				70	313	2158	335	2310
12L14, annealed	115	793	0.312	50	274	1889	302	2082
				60	282	1944	315	2172
				70	316	2179	343	2365

Forging Defects

1. **Unfilled section**: this type of forging defects left some portion unfilled. It is caused by poor design of die, less raw material, poor forging techniques and poor heating. To avoid the occurrence of the defect, proper care must be taken on the die design, heating, and there should be enough raw materials.

2. **Cold shut**: this type of forging defect occurs as small cracks at the corners of the object. It is caused by improper design of the forging die, sharp corners of the object and excessive chilling of the forge product. This forging defect can be avoided when the fillet radius of the die is increased.

3. **Scale pits**: this type of forging defect occurs due to improper cleaning of the forged surface. Scale pit is usual in forging carried out in open environment. It causes irregular deputations on the forging surfaces. This defect can be avoided by adequate cleaning of forged surface.

4. **Die shift**: this forging defect is caused when the upper and lower dies are not aligned with each other, this will lead to improper dimensions of the product. This defect can be avoided when the die is properly aligned. It can be done by placing half portion of the work piece on the upper die and half on the lower die, so that the both portion can match.

5. Flakes: this type of forging defect occurs due to improper cooling of the forged product. It is internal cracks caused when the forged products cool quickly, and it reduces the strength of the forge product. Flakes can be avoided when proper cooling is performed.

6. Improper grain growth: this forging defect is caused by improper flow of metal during the casing process which changes the predefined grain of the product structure. It can be avoided by performing better design of die.

7. Incomplete forging penetration: this forging defect occurs due to light or rapid hammer blow that lead to incomplete forging. It can be prevent by proper usage or control of forging press.

8. Surface cracking: this type of forging defects arises when the forging operation is performed at low temperature which leads to occurrence of cracks on the work pieces. It can be controlled by working on a proper temperature.

9. Residual stresses in forging: this type of forging defect takes place when the forged parts are not properly cooled. It can be caused by much rapid cooling and can be prevented by slow cooling of the forged part.

Residual stresses

✓Residual stresses are inherently introduced to forged products during their deformation.

✓These stresses influence the integrity of load-bearing parts.

✓Their effects depend on their nature (tensile or compressive), location and magnitude.

✓Tensile residual stresses' integrity can be very detrimental, particularly for products used in the as-forged condition.

✓In contrast, compressive residual stresses can be a lifesaver, if tailored appropriately.

Residual stresses

✓Hence, numerical and experimental methods should be carried out to characterize the residual stresses, and they should be taken into account for forged products to prevent premature failure and to improve service life.

✓According to continuum mechanics, when an external force is applied to a continuous body, internal forces are induced and distributed through this medium.

✓The magnitudes of such forces are defined by their intensity (i.e., by the amount of force per unit area of the surface on which they act).

✓In discussing internal forces, this intensity is called stress.

✓Having said that, continuous bodies or engineering materials may experience internal stresses, even if there are no externally applied forces.

✓These so-called residual stresses are self-balanced, and locked-in stresses may be present in materials without the application of any external forces.

✓Residual stresses may superimpose with applied loads so that they have direct impact on the performance and service life of parts.

✓Therefore, residual stresses play a vital role, particularly in the structural integrity of engineering products, and they must be accounted for in all manufacturing methods, including forging.

✓Residual stresses can be induced into materials inherently (as in forging), or they can be deliberately introduced by means of mechanical surface treatments such as shot peening and laser peening.

✓The main mechanism of residual-stress generation is any source of "misfit" in the material, one of which is the non-uniform plastic deformation induced by forging.

✓Assume a material in 2-D with square shape.

✓If it is plastically deformed by upsetting and made rectangular, then there will be no macroscopic residual stresses as long as the deformation is introduced uniformly.

✓Therefore, it must be kept in mind that in order to generate residual stresses, there should be a misfit in the material.

✓In addition to plastic deformation after processes such as forging, misfits can also originate from the difference in the thermal-expansion coefficient, yield strength and stiffness inside a material,[2] which is the case for almost all engineering materials that include more than one constituent.

✓Temperature gradients due to welding, phase transformations and grain boundaries are other sources of discontinuities for residual stresses to be generated.

Schematic representation of most commonly observed residual-stress-generation mechanisms can be seen in Figure.

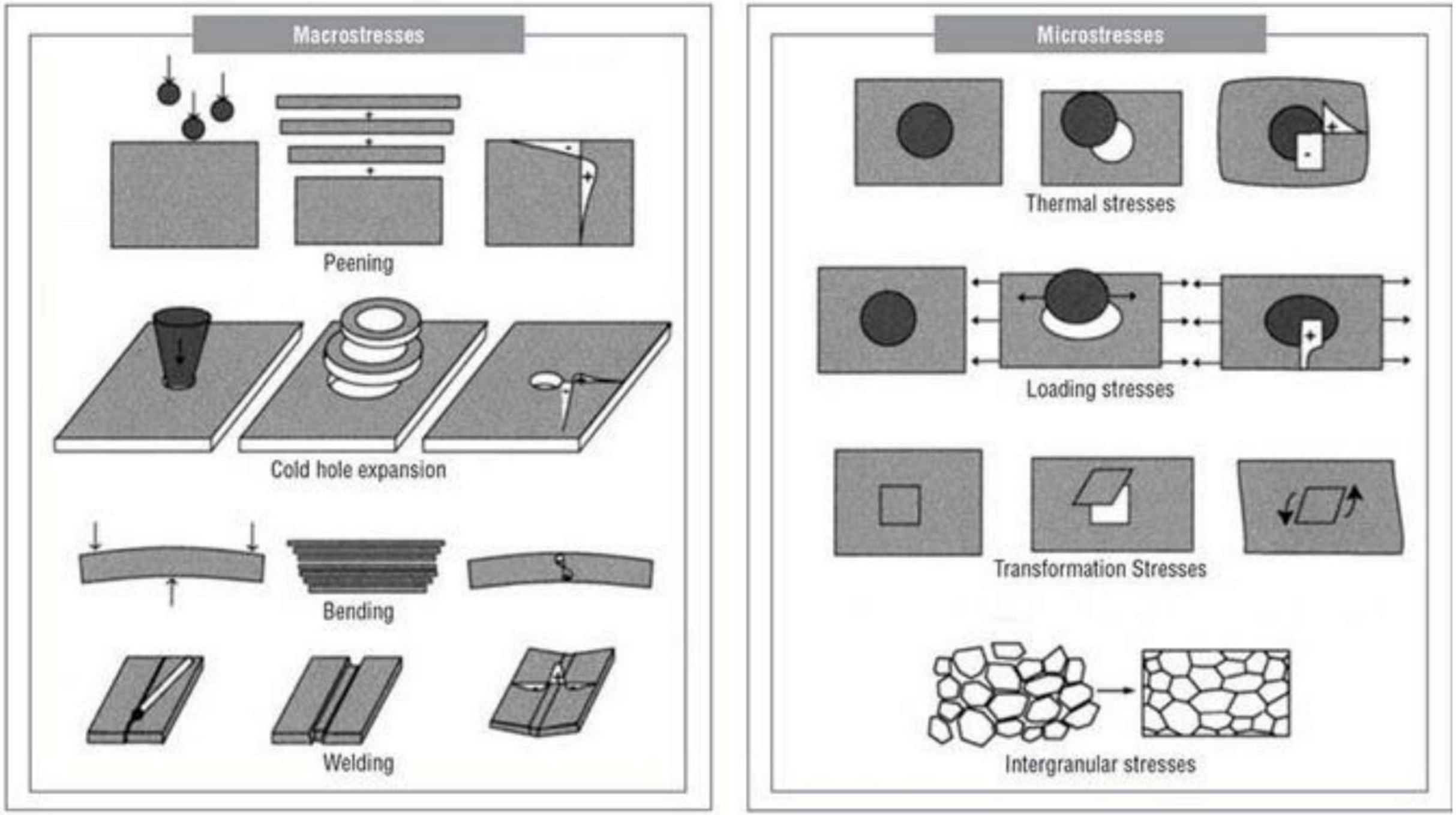

Figure 1. Most commonly seen residual-stress-generation mechanisms *(courtesy P.J. Withers)*[3]

✓The most common classification of residual stresses is according to their size.

✓Type I residual stresses are the self-balanced stresses across a large distance, and they can affect all or part of a component.

✓Type II residual stresses can be described across grains, and the causes of these stresses are the anisotropy and heterogeneity of grains in polycrystalline materials.

✓Type III residual stresses are atomic-level stresses formed due to crystalline defects like vacancies or interstitial atoms.

✓Type I residual stresses are also called macrostresses, and Type II and Type III stresses are microstresses.

✓For nondestructive techniques, material characteristics such as atomic d-spacing (the atomic distance between crystallographic planes) or the material response to magnetism or sound are employed.

✓Residual-stress determination with these techniques usually requires measurement of the characteristic features for unstressed and stressed material.

✓X-ray diffraction, synchrotron X-ray diffraction, neutron diffraction and Barkhausen are the preferred nondestructive residual-stress measurement methods.

Residual Stresses: Friend or Foe?

Owing to the nature of forging, a significant amount of non-uniform plastic deformation is inevitably introduced into components.

For hot forging, the operating temperature must be above the recrystallization temperature of the material to be forged.

Therefore, the plastic deformation-induced misfit required for residual-stress generation is minimized owing to reformed grains.

For cold forging, on the other hand, macro and micro residual stresses have to be taken into account.

✓The residual-stress distribution is crucial for products used in the as-forged stage, and characterization of the residual stresses is important to estimate the part's expected service life, particularly under fatigue loads.

✓Any significant tensile residual-stress field will accelerate crack formation, resulting in early failure under operating conditions.

✓Therefore, application of stress-relieving heat treatment can be considered for this type of product.

✓There are well-defined standards for stress-relieving procedures depending on material type and properties.

In addition to inherently induced and mostly detrimental residual stresses, they can also be introduced intentionally.

For instance, mechanical surface treatments, like shot peening and laser peening, are used to induce beneficial compressive residual stresses to increase the fatigue life of engineering products.

In the open literature, there are studies exploring the effects of shot peening on the service life of hot- and cold-forging dies.

✓It was reported that the fatigue life of shot-peened dies used in hot and cold forging were increased by a factor of two and more than three times, respectively.

✓Furthermore, such surface treatments can also be applied to forged products to increase service performance.

✓According to a study conducted for hot-forged connecting rods used in the automotive industry, the fatigue strength was increased about 50%, which was associated with the induced beneficial compressive residual stresses after shot peening.

✓Application of shot peening and laser peening for prolonged service life and higher fatigue strength is a common practice, particularly for safety-critical applications in the aerospace, automotive and defense industries.

Metal Deformation Processing

By
Dr. R. B. Singh
Assistant Professor
E-mail – raj@nith.ac.in

Department of Materials Science and Engineering
National Institute of Technology Hamirpur
Hamirpur – 177005, H. P. India

Rolling

Rolling is the process of reducing the thickness or changing the cross section of a long workpiece by compressive forces applied through a set of rolls, as shown in figure.

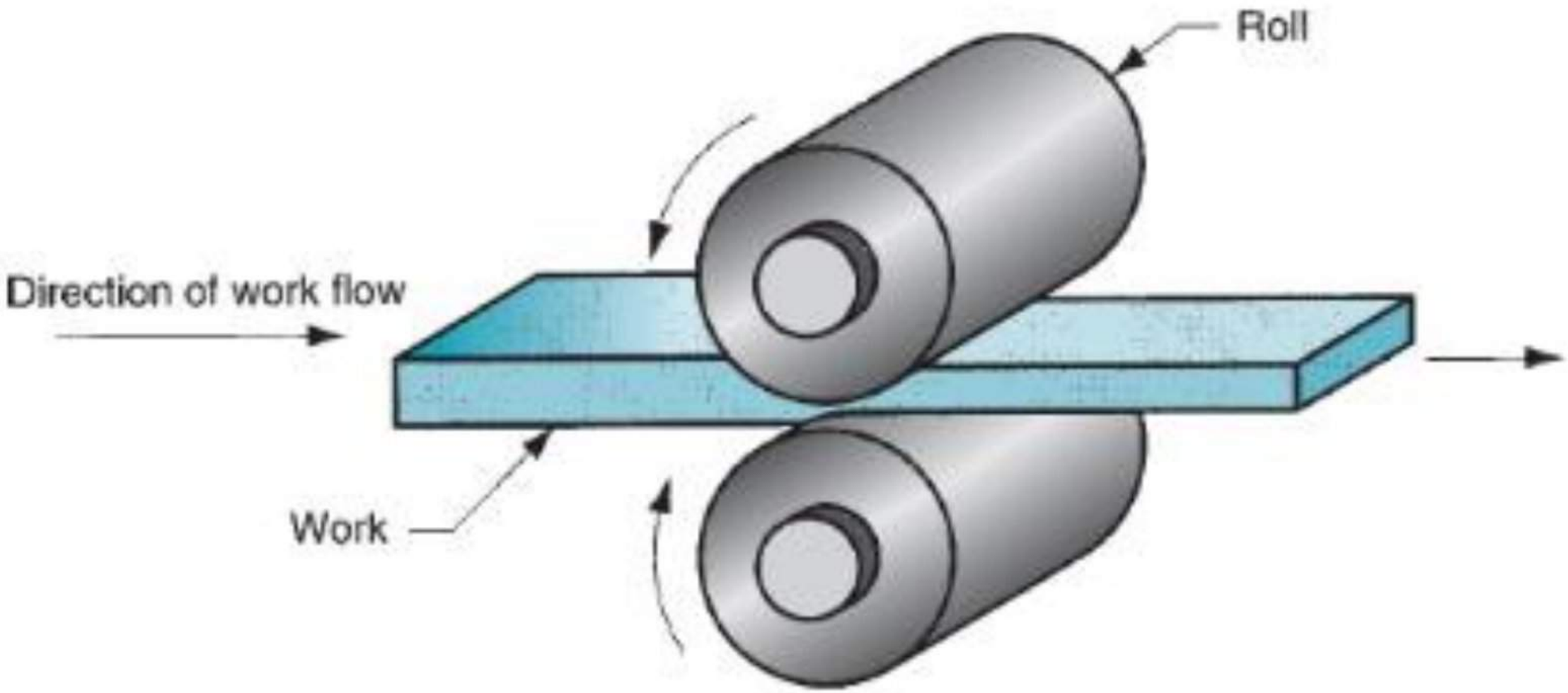

✓Most rolling is carried out by hot working, called hot rolling, owing to the large amount of deformation required.

✓Hot-rolled metal is generally free of residual stresses, and its properties are isotropic.

✓Disadvantages of hot rolling are that the product cannot beheld to close tolerances, and the surface has a characteristic oxide scale.

✓Steelmaking provides the most common application of rolling operations.

✓Figure (5-2) illustrates the sequence of steps in a steel rolling mill to show the variety of products made.

✓Similar steps occur in other basic metal industries.

(Cross sectional area > 100 cm^2 and with a width ≥ 2 x thickness).

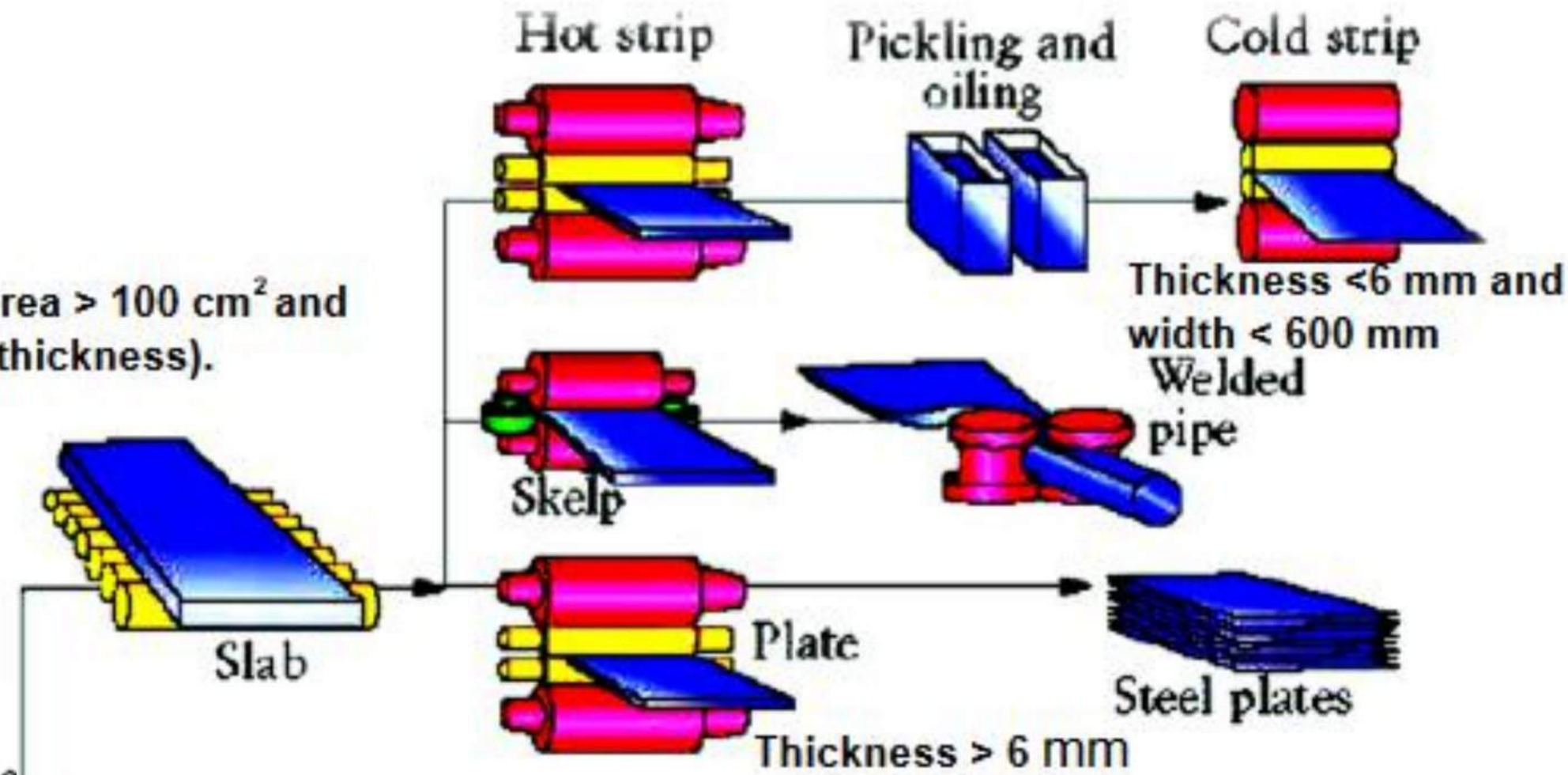

Continuous casting or ingots

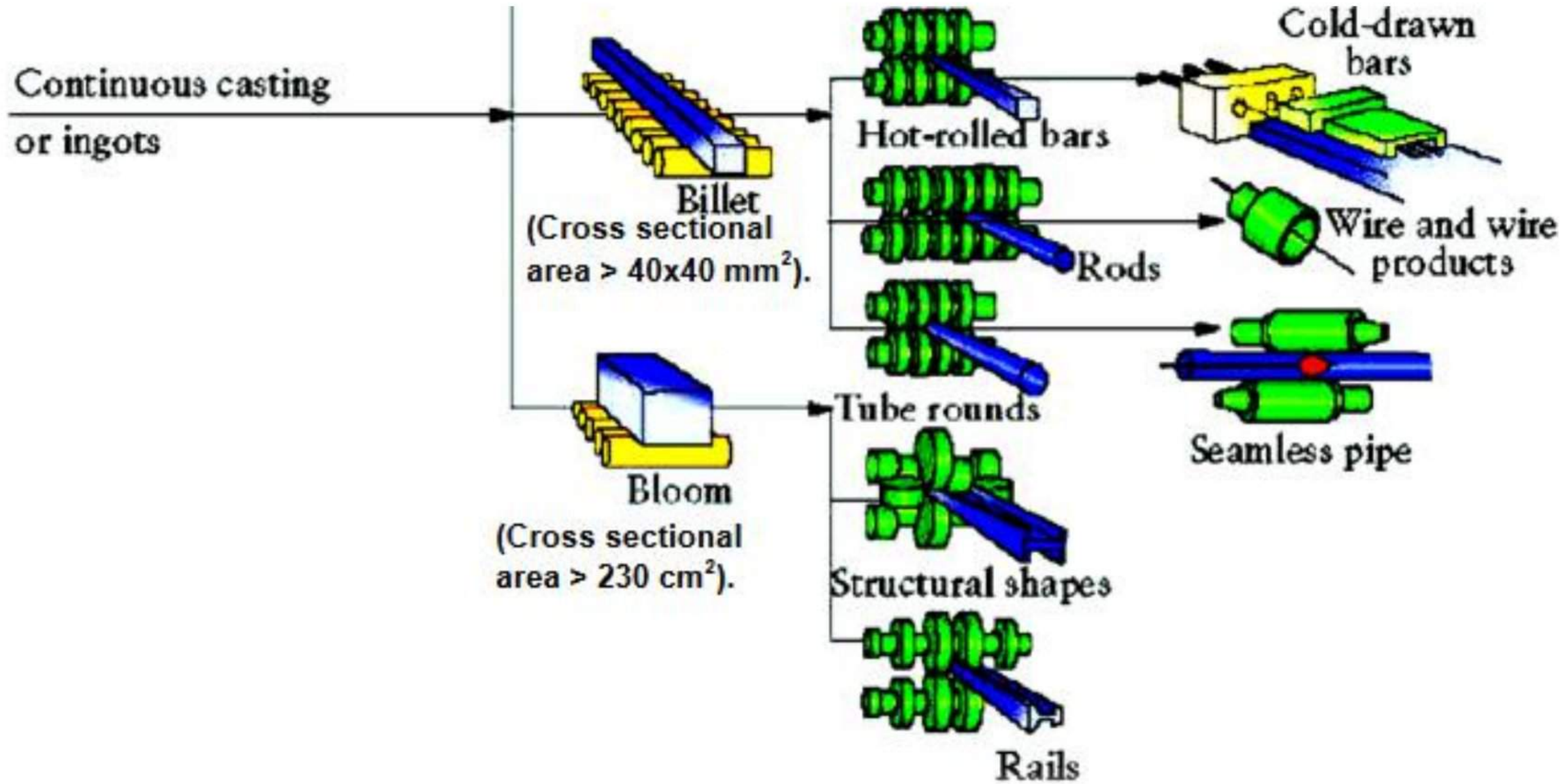
Continuous casting
or ingots
Billet
(Cross sectional
area > 40x40 mm²).
Bloom
(Cross sectional
area > 230 cm²).
Hot-rolled bars
Rods
Tube rounds
Structural shapes
Rails
Cold-drawn
bars
Wire and wire
products
Seamless pipe

✓The work starts out as a cast steel ingot that has just solidified.

✓While it is still hot, the ingot is placed in a furnace where it remains for many hours until it has reached a uniform temperature throughout, so that the metal will flow consistently during rolling.

✓For steel, the desired temperature for rolling is around 1200°C.

✓The heating operation is called soaking, and the furnaces in which it is carried out are called soaking pits.

✓From soaking, the ingot is moved to the rolling mill, where it is rolled into one of three intermediate shapes called blooms, billets, or slabs, as shown in figure

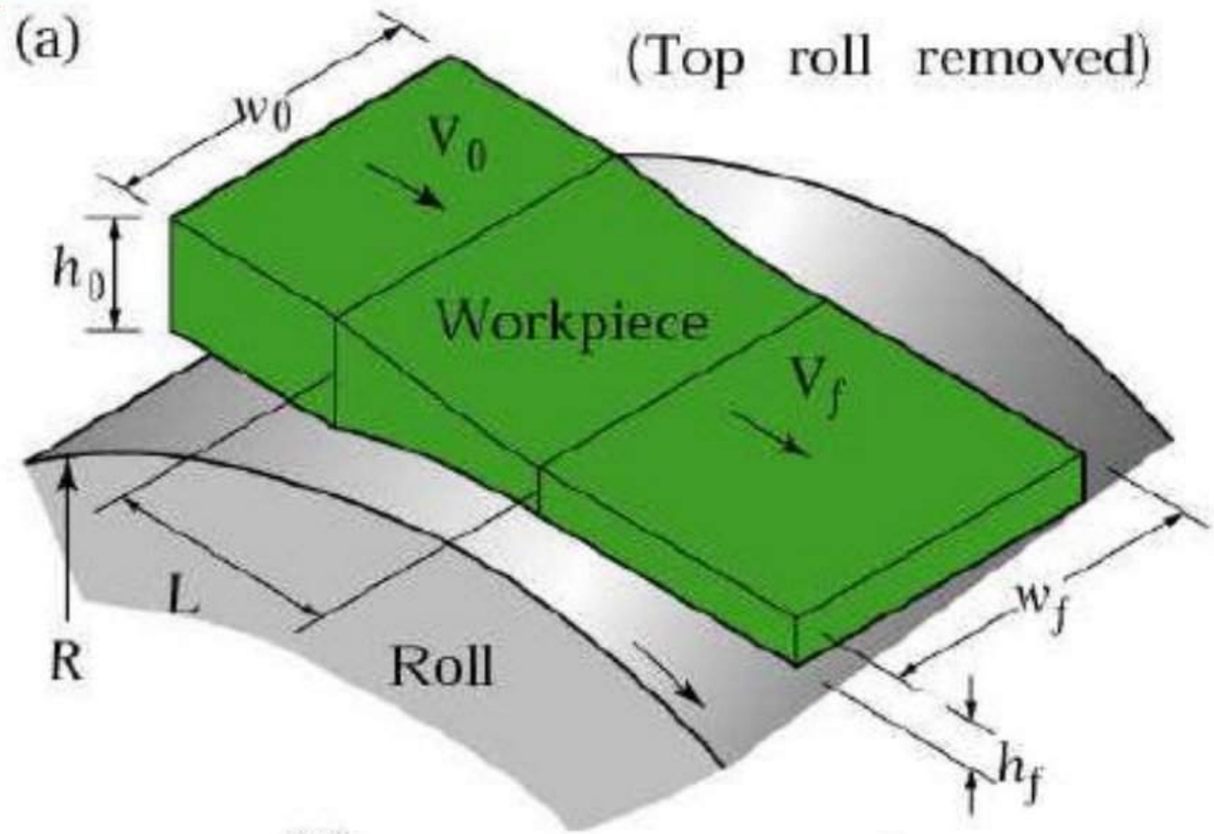

To keep constant the volume rate of the material, the velocity of the strip must increase as it moves through the roll gap

$$V_f = V_0\left(\frac{h_0}{h_f}\right)$$

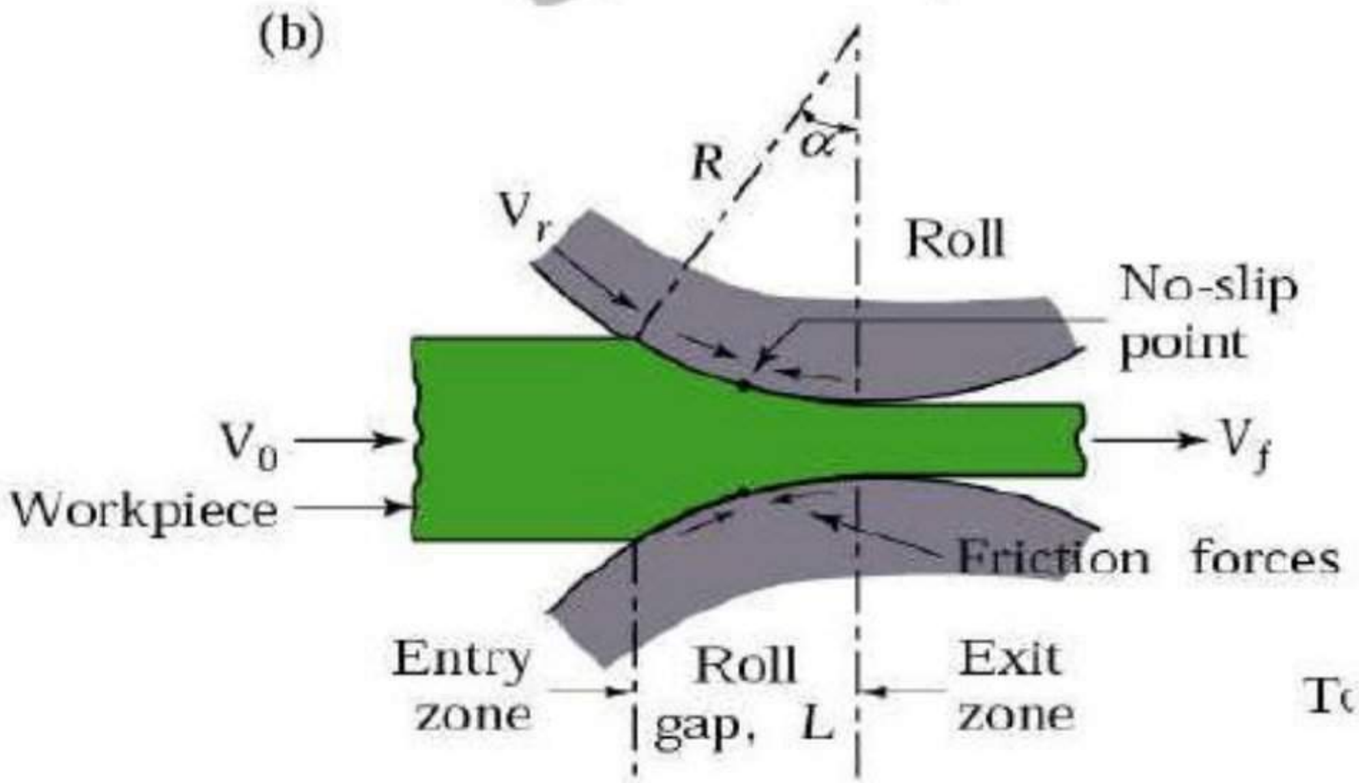

NEUTRAL POINT: point in the arc of contact where the roll velocity and the strip velocity are the same

$$\text{Forward slip} = \frac{V_f - V_r}{V_r}$$

1) The arc of contact between the rolls and the metal is a part of a circle.
2) The coefficient of friction, μ, is constant in theory, but in reality μ varies along the arc of contact.

3) The metal is considered to deform plastically during rolling.

4) The volume of metal is constant before and after rolling. In practical the volume might decrease a little bit due to close-up of pores.
5) The velocity of the rolls is assumed to be constant.

6) The metal only extends in the rolling direction and no extension in the width of the material.
7) The cross sectional area normal to the rolling direction is not distorted.

5.2 Flat rolling and its analysis:

Flat rolling is illustrated in Figures (5-1). It involves the rolling of slabs, strips, sheets, and plates workparts of rectangular cross section in which the width is greater than the thickness. In flat rolling, the work is squeezed between two rolls so that its thickness is reduced by an amount called the **draft**:

$$d = h_\circ - h_f = 2R\,(1-\cos\alpha) \qquad 5.1$$

Where d = draft, mm (in); $h_\circ$= starting thickness, mm (in); and h_f = final thickness, mm (in).R = roll radius in mm and (α) = bite angle in degree. Draft is sometimes expressed as a fraction of the starting stock thickness, called the **reduction**

$$r = \frac{d}{h_\circ} \qquad 5.2$$

Where r = reduction. When a series of rolling operations are used, reduction is taken as the sum of the drafts divided by the original thickness. In addition to thickness reduction, rolling usually increases work width. This is called spreading, and it tends to be most pronounced with low width-to-thickness ratios and low coefficients of friction, so the volume of metal exiting the rolls equals the volume entering

$$h_\circ w_\circ L_\circ = h_f w_f L_f \qquad 5.3$$

Where w_o and w_f are the before and after work widths, mm (in); and L_o and L_f are the before and after work lengths, mm (in). Similarly, before and after volume rates of material flow must be the same, so the before and after velocities can be related:

$$h_o w_o v_o = h_f w_f v_f \qquad 5.4$$

Where v_o and v_f are the entering and exiting velocities of the work.
The surface speed of the rolls is V_r the velocity of the strip increases from its entry value of V_O as it moves through the roll gap; the velocity of the strip is highest at the exit from the roll gap and is denoted as V_f. The metal accelerates in the roll gap in the same manner as an incompressible fluid flowing through a converging channel.

The maximum possible draft is defined as in equation below; it can be shown that this quantity is a function of the roll radius, R, and the coefficient of friction, μ, between the strip and the roll by the following relationship:

$$d_{max} = \mu^2 R \qquad 5.6$$

Thus, as expected, the higher the friction and the larger the roll radius, the greater the maximum possible draft becomes. Note that this situation is similar to the use of large tires (high R) and rough treads (high, μ.) on farm tractors and off-road earthmoving equipment, thus permitting the vehicles to travel over rough terrain without skidding.

Coefficient of friction in rolling depends on lubrication, work material, and working temperature. In cold rolling, the value is around 0.1; in warm working, a typical value is around 0.2; and in hot rolling, m is around 0.4. Hot rolling is often characterized by a condition called sticking, in which the hot work surface adheres to the rolls over the contact arc.

This condition often occurs in the rolling of steels and high-temperature alloys.

When sticking occurs, the coefficient of friction can be as high as 0.7.

The consequence of sticking is that the surface layers of the work are restricted to move at the same speed as the roll speed vr; and below the surface, deformation is more severe in order to allow passage of the piece through the roll gap.

The true strain experienced by the work in rolling is based on before and after stock thicknesses. In equation form,

$$\varepsilon = \ln \frac{h_o}{h_f}$$

The true strain can be used to determine the average flow stress Yf applied to the work material in flat rolling.

$$\overline{Y_f} = \frac{K\varepsilon^n}{1+n}$$

The minimum number of passes= h_o-h_f/d_{max}

Roll force, Torque, and Power Requirements

The rolls apply pressure on the flat strip in order to reduce its thickness, resulting in a roll force, F, as shown in Fig

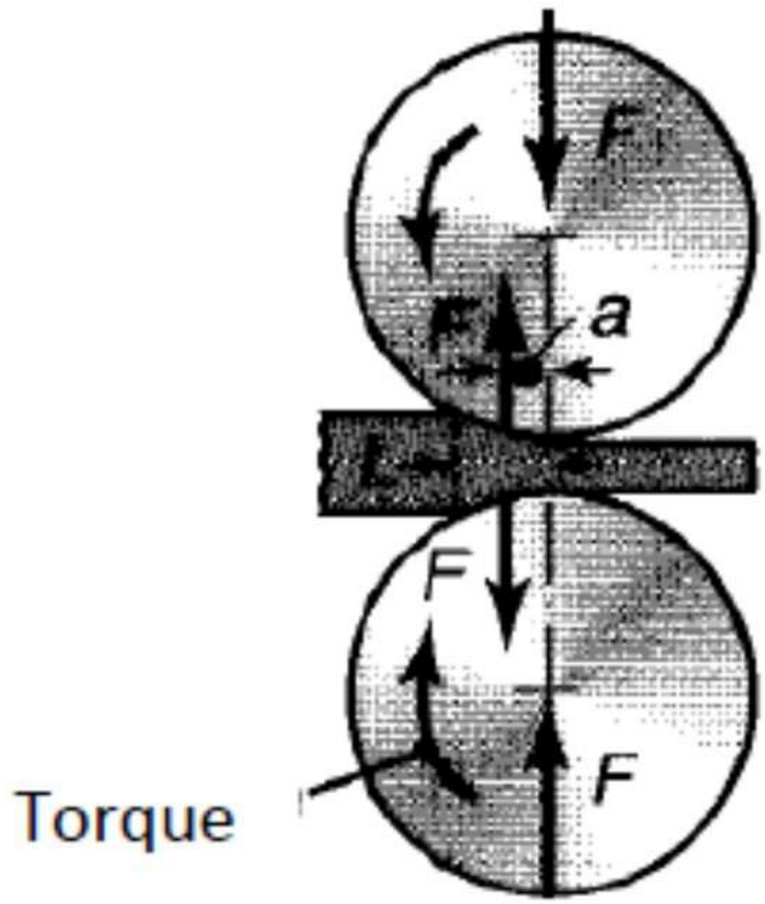

Note that this force appears in the figure as perpendicular to the plane of the strip, rather than at an angle.

This is because, in practice, the arc of contact is very small compared with the roll radius, so we can assume that the roll force is perpendicular to the strip without causing significant error in calculations. The roll force in flat rolling can be estimated from the formula

$$F = \bar{Y}_f \; w \, L$$

For a frictionless situation; however, an estimate of the actual roll force, including friction, may be made by increasing this calculated force by about 20%).

Where Yf = average flow stress from Eq. (5.8), MPa (lb/in2); and the product (wL) is the roll-work contact area, mm2 (in2). Contact length can be approximated by

$$L = \sqrt[2]{R(h_o - h_f)}$$

Torque

The torque in rolling can be estimated by assuming that the roll force is centered on the work as it passes between the rolls, and that it acts with a moment arm of one-half the contact length L. Thus, torque for each roll is

$$T=0.5FL$$

The power required per roll can be estimated by assuming that (F) acts in the middle of the arc of contact; thus, in Fig. (5-4), a = L/2. Therefore, the total power (for two rolls),

$$\text{Power (in Kw)} = \frac{2\pi FLN}{60000}$$

Where F is in newtons , L is in meters, and N is the revolutions per minute of the roll.

In traditional English units, the total power can be expressed as

$$\text{Power (in hp)} = \frac{2\pi FLN}{33000}$$

Where F is in pounds and L is in feet

Q.1

A 300-mm-wide strip 25-mm thick is fed through a rolling mill with two powered rolls each of radius = 250 mm. The work thickness is to be reduced to 22 mm in one pass at a roll speed of 50 rev/min. The work material has a flow curve defined by K = 275 MPa and n = 0.15, and the coefficient of friction between the rolls and the work is assumed to be 0.12. Determine if the friction is sufficient to permit the rolling operation to be accomplished. If so, calculate the roll force, torque, and horsepower.

Solution:

The draft attempted in this rolling operation is

$$d = 25 - 22 = 3mm$$

From equation (5.6) we can find the maximum draft

$$d_{max} = (0.12)^2(250) = 3.6mm$$

Since the maximum allowable draft exceeds the attempted reduction, the rolling operation is feasible. To compute rolling force, we need the contact length L and the average flow stress Yf . The contact length is given by Eq. (5.10)

$$L = \sqrt[2]{R(h_\circ - h_f)}$$

$$L = \sqrt[2]{250(25 - 22)} = 27.4 \text{ mm}$$

Y_f is determined from the true strain:

$$\varepsilon = \ln \frac{h_\circ}{h_f}$$

$$\varepsilon = \ln \frac{25}{22} = 0.128$$

$$\bar{Y}_f = \frac{275X0.128^{0.15}}{1+0.15} = 175.7 \text{ MPa}$$

$$F = 175.7(300)(27.4) = 1.444.254 \text{ N}$$

Torque required to drive each roll is given by Eq. (5.11):

$$T = 0.5(1.444.254)(27.4)(10^{-3}) = 19.786 \text{ N-m}$$

And the power is obtained from Eq. (5.12):

$$\text{Power (in Kw)} = \frac{2\pi X 1.444.786 X 0.274 X 50}{60000} = 207.284 \text{ Kw}$$

(We note that one horsepower =745.7 W):→ Power in hp $= \frac{207284}{745.7} = 277.97 = 278$ hp

It can be seen from this example that large forces and power are required in rolling. Inspection of Eqs. (5.9) and (5.12) indicates that force and/or power to roll a strip of a given width and work material can be reduced by any of the following: (1) using hot rolling rather than cold rolling to reduce strength and strain hardening (K and n) of the work material; (2) reducing the draft in each pass; (3) using a smaller roll radius R to reduce contact area and then reduce the force; and (4) using a lower rolling speed N to reduce power.

NOMENCLATURE OF ROLLED PRODUCTS

The following nomenclature is in common usage:

(i) Blooms: It is the first product obtained from the breakdown of Ingots. A bloom has a crosssection ranging in size from 150 mm square to 250 mm square or sometimes 250 × 300 mm rectangle.

(*ii*) ***Billet: A billet is the next product rolled from a bloom. Billets vary from 50 mm square to 125 mm square.***

(*iii*) ***Slab: Slab is of rectangular cross-section with thickness ranging from 50 to 150 mm and is available in lengths up to 112 metres.***

(*iv*) ***Plate: A plate is generally 5 mm or thicker and is 1.0 or 1.25 metres in width and 2.5 metres in length.***

NOMENCLATURE OF ROLLED PRODUCTS

(*v*) ***Sheet: A sheet is up to 4 mm thick and is available in same width and length as a plate.***

(*vi*) ***Flat: Flats are available in various thickness and widths and are long strips of material of specified cross-section.***

(*vii*) ***Foil: It is a very thin sheet.***

(*viii*) ***Bar: Bars are usually of circular cross-section and of several metres length. They are common stock (raw material) for capstan and turret lathes.***

(*ix*) ***Wire: A wire is a length (usually in coil form) of a small round section; the diameter of which specifies the size of the wire.***

ROLLS AND ROLL PASS DESIGN

Two types of rolls—Plain and Grooved.

Rolls used for rolling consists of three parts *viz., body, neck and wabbler.*

The necks rest in the bearings provided in the stands and the starshaped wabblers are connected to the driving shaft through a hollow cylinder.

Wabbler acts like a safety device and saves the main body of the roll from damage if too heavy a load causes severe stresses.

The actual rolling operation is performed by the body of the roll. The rolls are generally made from a special variety of cast iron, cast steel or forged steel.

ROLLS AND ROLL PASS DESIGN

Plain rolls have a highly finished hard surface and are used for rolling flats, plates and sheets.

Grooved rolls have grooves of various shapes cut on their periphery.

One-half of the required shape of rolled product is sometimes cut in the lower roll and one-half in the upper roll, so that when the rolls are assembled into its stands, the required shape in full will be produced on the work material, once it passes (*i.e., rolled) through the groove in question.*

However it should be understood that the desired shape of the rolled section is not achieved in a single pass.

ROLLS AND ROLL PASS DESIGN

The work material has to be rolled again and again through several passes and each pass brings the cross-section of the material closer to the final shape required.

These passes are carefully designed to avoid any rolling defect from creeping in.

Rolling is a painstaking process as would be noticed from the scheme of passes shown in Figure for conversion of a steel billet into a round bar.

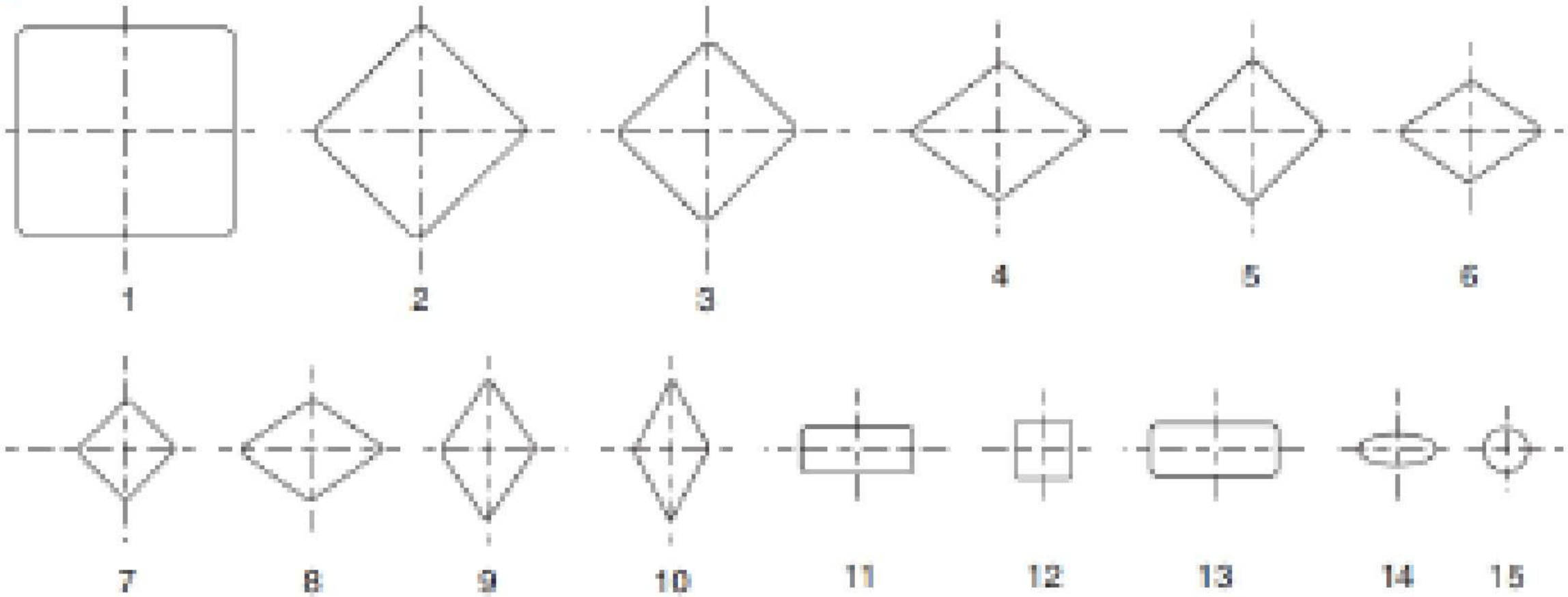

Various stages of rolling and the number of passes for converting a steel billet into round bar

Various passes fall into the following groups:

(i) Breakdown or roughing passes,

(ii) Leader passes, and

(iii) Finishing passes.

Breakdown passes are meant to reduce the cross-sectional area.

The leader passes gradually bring the cross-section of the material near the final shape.

The final shape and size is achieved in finishing passes.

Allowance for shrinkage on cooling is given while cutting the finishing pass grooves.

Rolling Mills

Various rolling mill configurations are available to deal with the variety of applications and technical problems in the rolling process.

Two-high rolling mill

The basic rolling mill consists of two opposing rolls and is referred to as a two-high rolling mill. The rolls in these mills have diameters in the range of 0.6 to 1.4 m (2.0–4.5 ft). The two-high configuration can be either reversing or nonreversing.

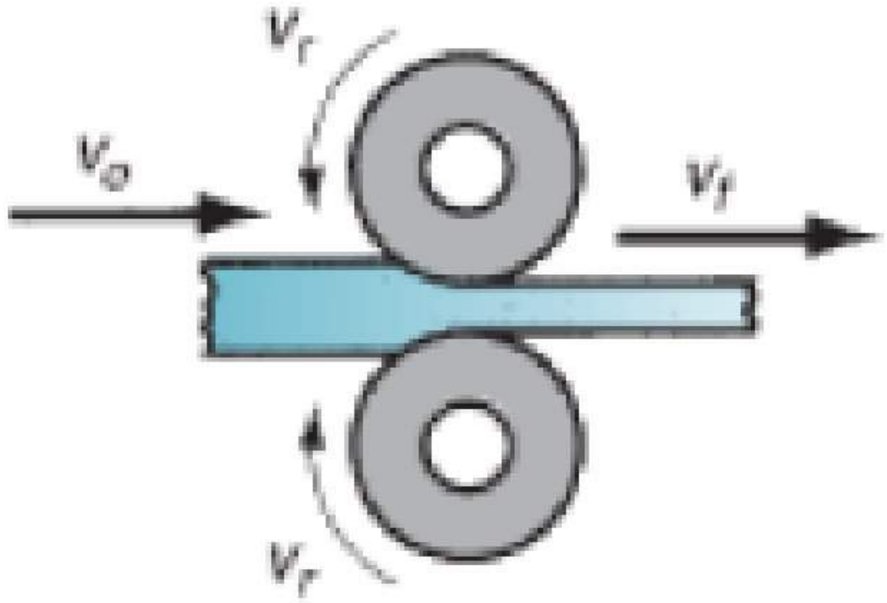

(a)

Three-High Configuration Roll Mill

In the three-high configuration, Figure, there are three rolls in a vertical column, and the direction of rotation of each roll remains unchanged. To achieve a series of reductions, the work can be passed through from either side by raising or lowering the strip after each pass. The equipment in a three-high rolling mill becomes more complicated, because an elevator mechanism is needed to raise and lower the work.

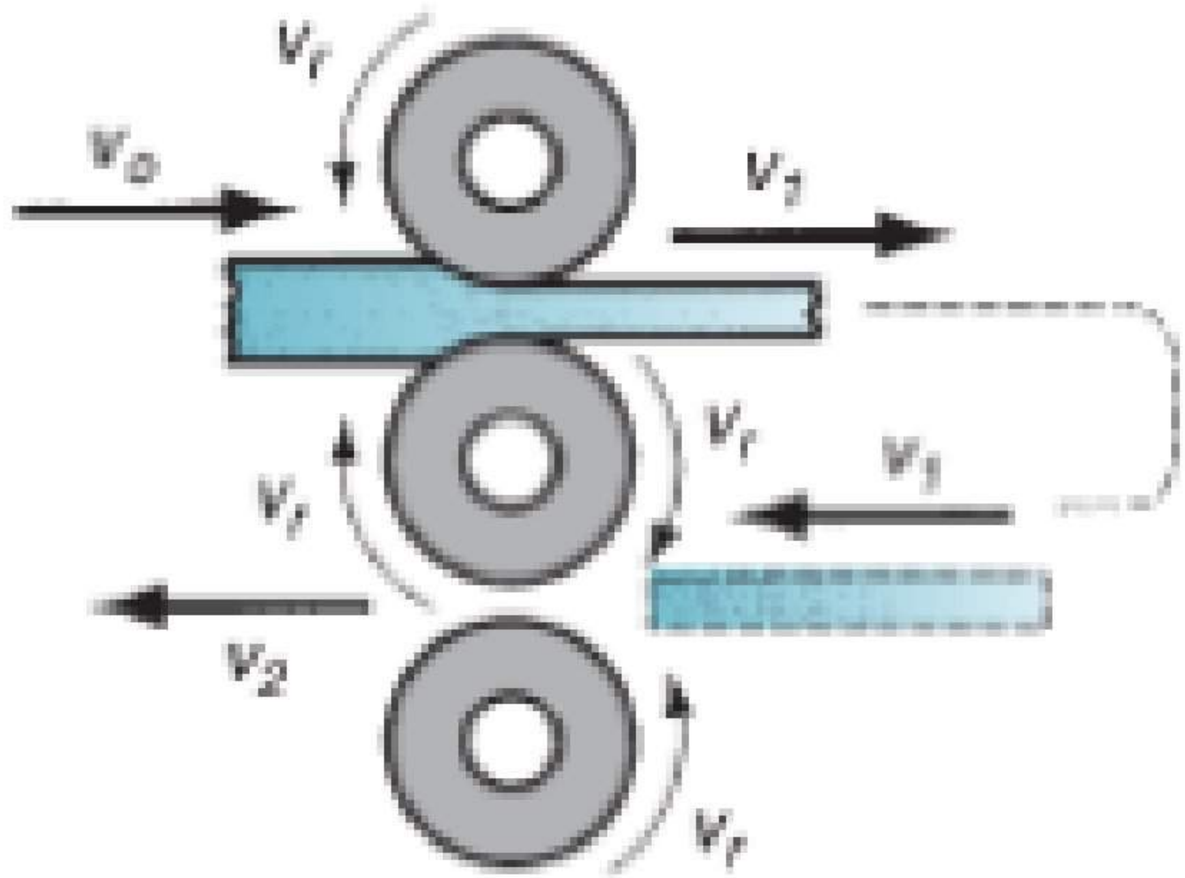

Four-High Rolling Mill

Roll-work contact length is reduced with a lower roll radius, and this leads to lower forces, torque, and power. The four-high rolling mill uses two smaller-diameter rolls to contact the work and two backing rolls behind them, as in Figure 5.6 (c). Owing to the high roll forces, these smaller rolls would deflect elastically between their end bearings as the work passes through unless the larger backing rolls were used to support them.

Cluster Rolling Mill

Another roll configuration that allows smaller working rolls against the work is the cluster rolling mill (Figure 5.6(d)).

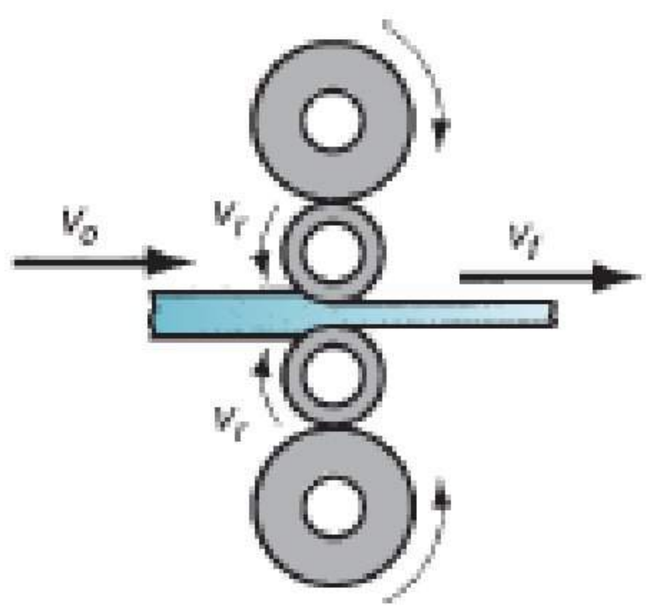

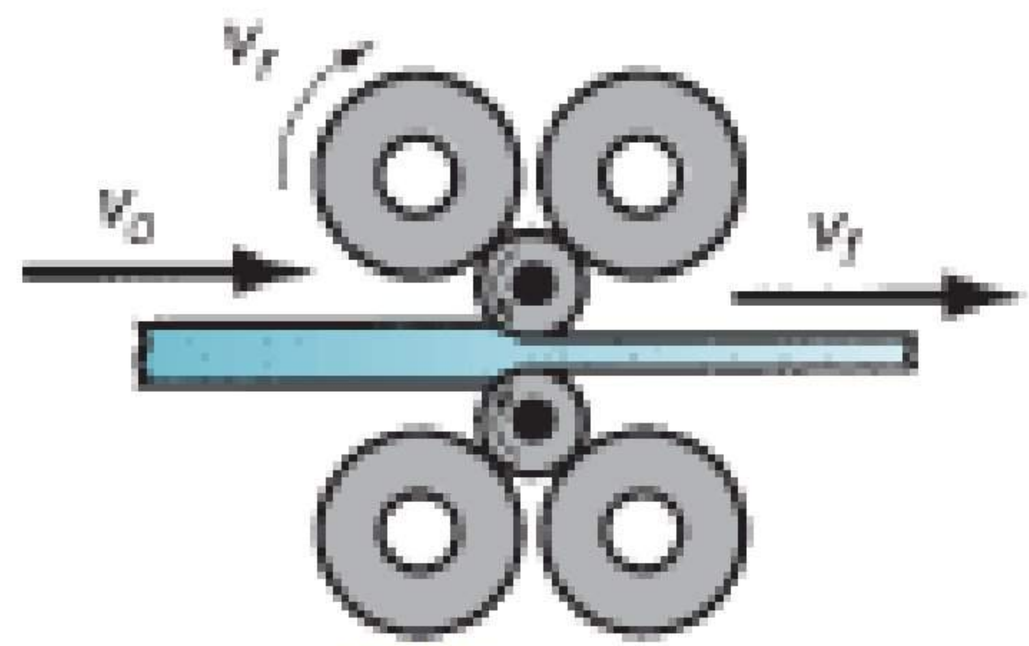

Tandem Rolling Mill

To achieve higher throughput rates in standard products, a tandem rolling mill is often used. This configuration consists of a series of rolling stands, as represented in Figure 5.6(e). Although only three stands are shown in our sketch, a typical tandem rolling mill may have eight or ten stands, each making a reduction in thickness or a refinement in shape of the work passing through.

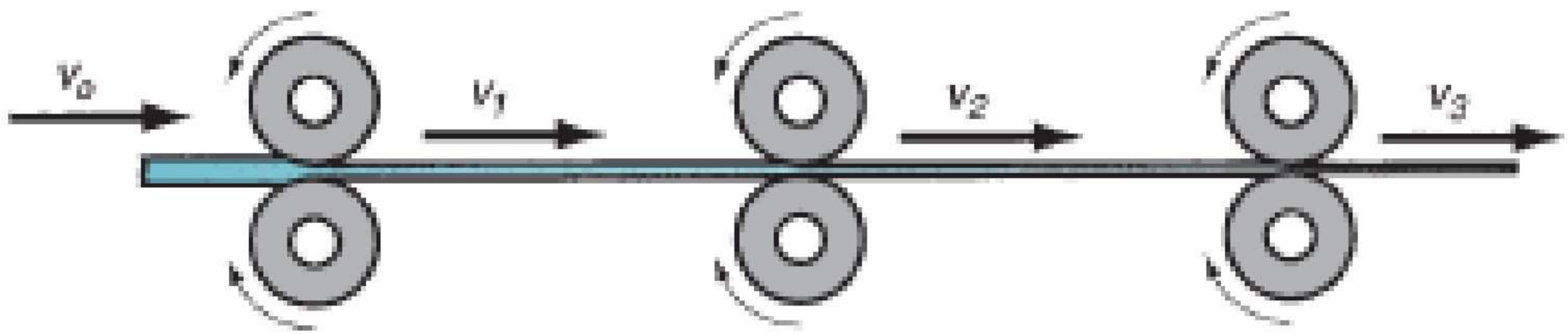

(e)

Geometric Considerations

Because of the forces acting on them, rolls undergo changes in shape during rolling.

just as a straight beam deflects under a transverse load, roll forces tend to bend the rolls elastically during rolling

As expected, the higher the elastic modulus of the roll material, the smaller the roll deflection.

As a result of roll bending, the rolled strip tends to be thicker at its center than at its edges (crown).

The usual method of avoiding this problem is to grind the rolls in such way that their diameter at the center is slightly larger than at their edges (camber).

Geometric Considerations

Thus, when the roll bends, the strip being rolled now has a constant thickness along its width For rolling sheet metals, the radius of the maximum camber point is generally 0.25 mm greater than that at the edges of the roll.

However, as expected, a particular camber is correct only for a certain load and strip width.

To reduce the effects of deflection, the rolls also can be subjected to external bending by applying moments at their bearings

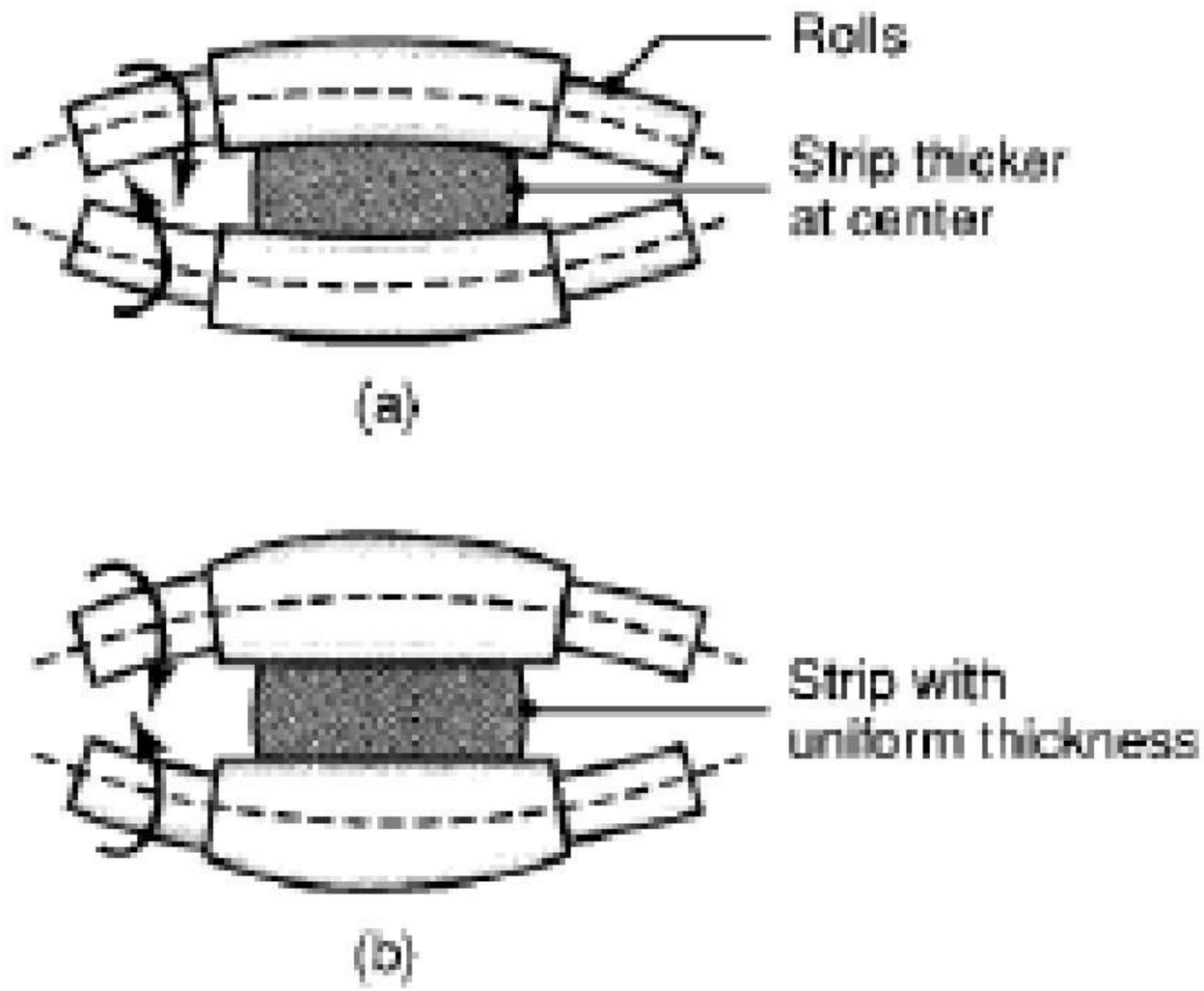

a) Bending of straight cylindrical rolls caused by roll forces. (b) Bending of rolls ground with camber, producing a strip with uniform thickness through the strip width.

ROLLING DEFECTS

- Wavy edges
  - Result from concave roll bending and
  - Thinner along its edges than at its center
- Cracks
  - Result from poor material ductility
  - Convex roll bending
  - Severe conditions cause centre split
- Alligatoring
  - Defects in the original cast material
  - Only surface of work is deformed

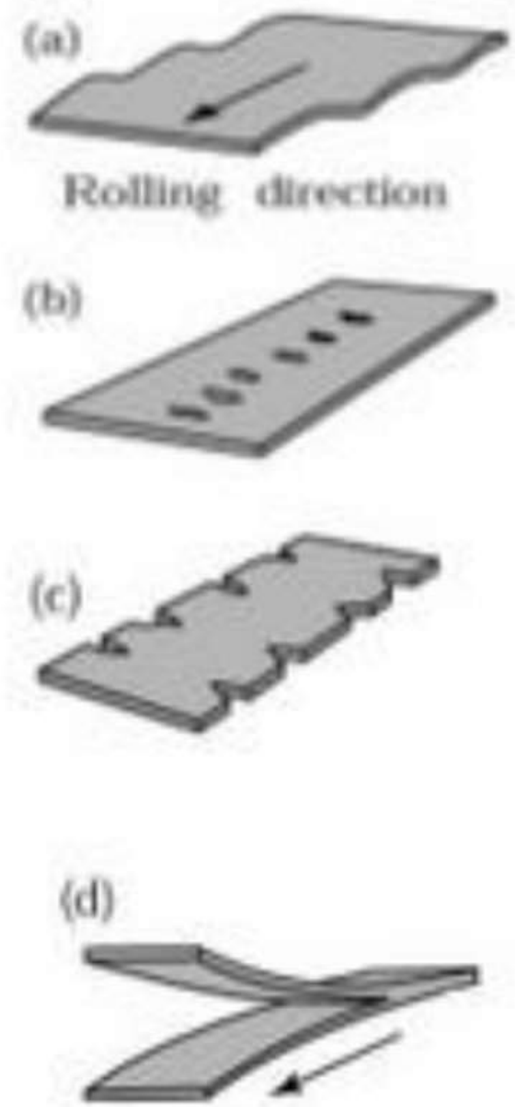

Defects in Metal Working Process

Defects in the Final Product of Mechanically worked metal may have originated from any one or a combination of the following:

The ingot used for MW may contain defects (pores, microcracks or inclusions) which may remain as such or get aggravated during working operation.

Operational Parameters Localized to a particular type of MW process (not following the proper practice).

Defects in Rolled Products

a) General

b) Operational

a) General

The defects may arise due to

i)Surface irregularities: The ingot or the raw material may be having irregularities due to scaling which will get trapped in the metal and remain inside the metal surface as laps.

This needs to be removed by grinding and there will be metal loss. If the defect is deep and severe the product may get rejected.

ii)Non-metallic inclusions: The inclusions may results from oxides or nitrides or silicates etc., especially in steels.

These are present in the molten metal during the preparation. If less in volume may cause small cracks in the metal and if more in volume will result in severe cracks called crocodile cracks separating the product into two halves

Internal Pores: There may be pores in the product due to the presence of gases like hydrogen, oxygen, nitrogen etc., If too much gases are present leads to elongation of the pores and the product may become weaker.

Sometimes separation may take place resulting in cracks.

i)Barrel: Due to friction at the edges of the product barrel action takes place.

Surface in contact experience severe friction as compared to center of the work.

Hence, with heavy reduction in the work the center tends to expand laterally more than the outer surfaces in contact with the dies and produces barreled edges.

ii) Non uniform deformation: When the rolling conditions a re such that only surface of the work piece is deformed.

The cross section of the slab is deformed into the shape as shown. The middle portion is less deformed as compared to the outer surface. This may be due to variation in temperature in the metal. Surface temperature being more than the inside temperature of the slab.

iii) Alligator Cracks: If there is any metallurgical weakness in the metal (due to the presence of inclusions) along the centre line of the slab, fracture will occur.

This results in the separation of the layer giving rise to opening of the slab which looks like an alligator mouth in opening position. Hence, the name

Others:

i)Hydrogen cracks: During preparation of the melt in the furnace several gases tries to get into the melt. Out of this Hydrogen gas diffuses into the melt to a large extent and is retained in the solid metal. Due the presence of hydrogen in excess internal cracks appear through the cross section during rolling and cannot be used. It is a major problem with alloy steels especially.

ii)Non metallic inclusion: Inclusions are non metallics appearing in the metal as a result of entrapment. During the preparation of the molten metal non metallic like oxides, nitrides, silicates enter the melt and remain as such in the solid metal. These are discontinuities in the metal and reduce the properties of the metal. On rolling they may result in cracks which may reach a critical value and make the product rejectable

Defects: Operational

i)Waviness.

Varying thickness. Variation in the work across the width in sheet rolling occurs because the roll gap is not perfectly parallel fig (a) in next page.

Since width and volume are constant and thickness is varying, the edges elongate more than the center fig (b) in next page. .

But the sheet is a continuous body; the strains readjust to maintain continuity. Thus the center portion is in tension and the edges are in compression fig (c) in next page.

The result is a wavy edge fig (d) in next page. .

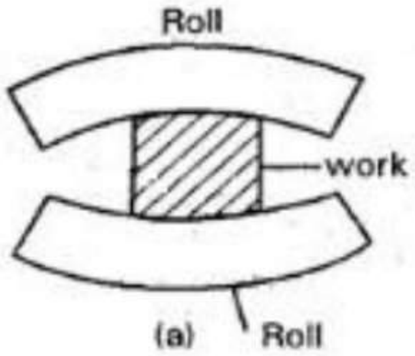
Roll
work
(a)
Roll

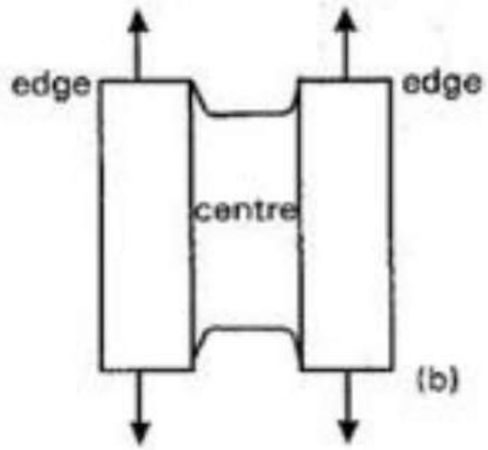
edge
edge
centre
(b)

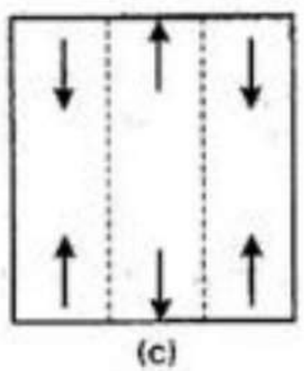
(c)

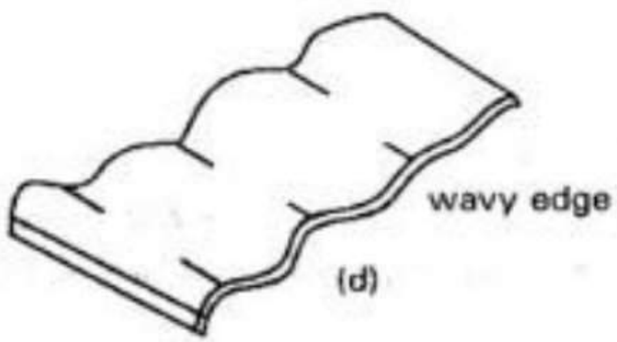
wavy edge
(d)

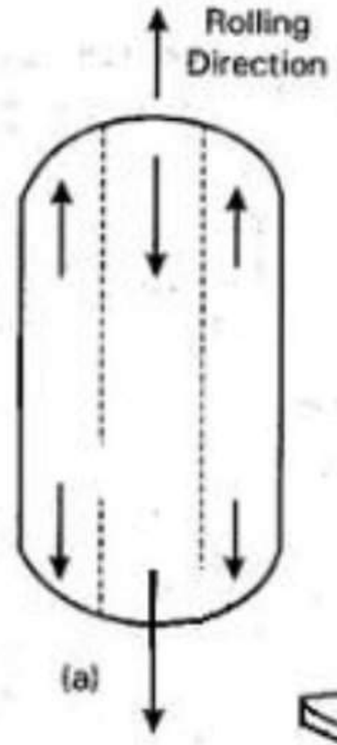
Rolling
Direction
(a)

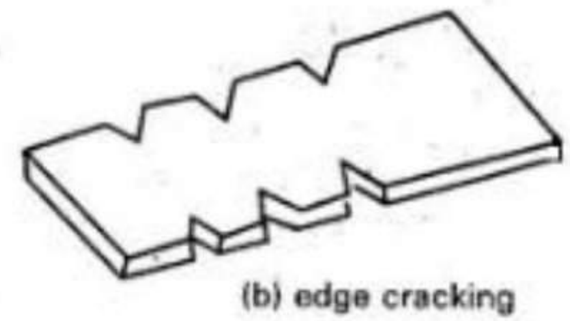
(b) edge cracking

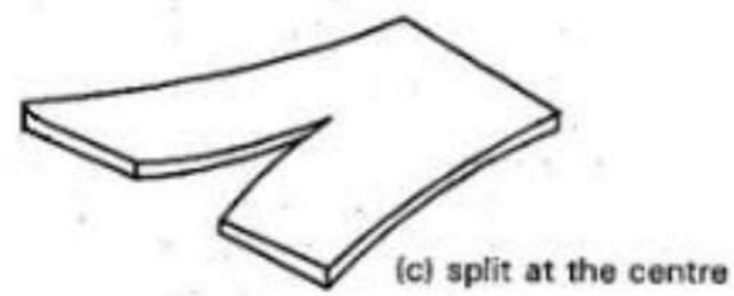
(c) split at the centre

Edge Cracking The length of the center portion increases but the edges are prevented due to frictional force.

As a result the material gets rounded off fig (a).

The edges are strained in tension leading to edge cracking along the width of the slab fig (b).

When the difference in the strains become excess i.e. under severe condition, split at the center of the slab occurs fig (c)