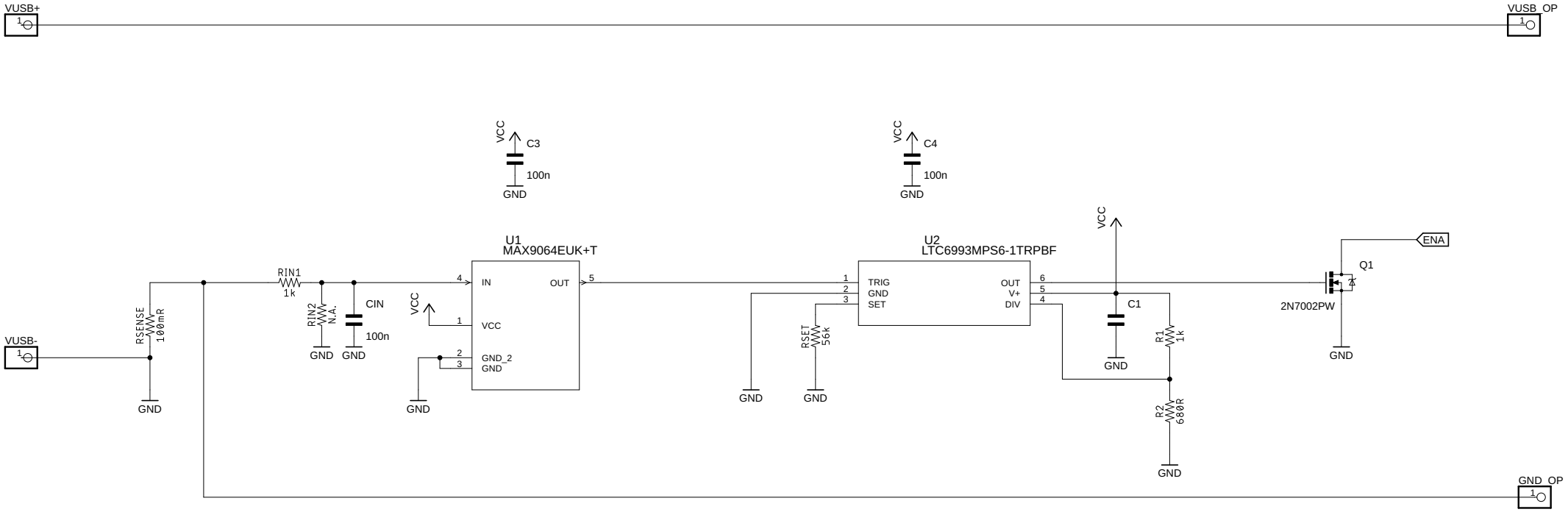
VUSB+
VUSB_OP
VCC
C3
100n
GND
VCC
C4
100n
GND
U1
MAX9064EUK+T
U2
LTC6993MPS6-1TRPBF
VCC
ENA
Q1
2N7002PW
RIN1
1k
RIN2
N.A.
CIN
100n
IN
OUT
VCC
GND_2
GND
TRIG
GND
SET
OUT
V+
DIV
RSET
56k
C1
R1
1k
R2
680R
RSENSE
100mR
VUSB-
GND_OP