School of Global Convergence Studies

Course: Structural Analysis of Mobility
Course ID: ISE2134
Topic: Micromobility Structure Analysis

Team A:

Maftuna	12236681
Zikrilloh	12245027
Mirjahon	12244995
Fazliddin	12240234
Vitaliy	12244998
Asadbek	12245008
Sherali	12244999

Introduction

A racing bicycle is a lightweight, high-stiffness structure designed for efficient power transfer and speed. This analysis focuses on identifying key loads acting on the frame, understanding bending, torsional, and axial behavior, and evaluating whether the selected geometry and materials ensurea safe design.

*The main engineering objective of the project is to design a racing frame with minimum mass **m**, while keeping all stresses within the allowable limit*

Literature Review

1. Load Distribution in Bicycle Frames:

- Studies show high stress concentration in:
- Down Tube
- Head Tube
- Bottom Bracket
- Loads include:
- Vertical load from rider: $F_v = mg$
- Pedaling torque: $T = F_{pedal} \cdot r$
- Road impact loads (short impulses > 2mg)

Literature Review II

- **Aluminum Alloy (6061-T6)**
  Young's Modulus:

$$E \approx 69\ GPa$$

- **Material Behavior**
  - Good strength-to-weight ratio
  - High corrosion resistance
  - Moderate yield strength (≈275 MPa)
- **Local Buckling**
  - Thin-wall aluminum can buckle if too thin
  - Larger diameters reduce buckling risk
- **Weld Fatigue at Joints**
  - Heat-affected zone softening
  - Critical at BB, Head Tube, Seat Cluster
- **Torsional Deformation**
  - Higher torsional twist vs. steel
  - Oversized tubes needed to control deformation

Design Considerations I

1. Geometry

- Typical racing bike dimensions:
- Effective Top Tube = 540–560 mm
- Head Tube Angle = 73°
- Wheelbase = 980–1000 mm

2. Applied Loads

- Rider weight:
- $F = mg \approx 700–900\ N$
- Pedaling torque:
- $T_p = F_{pedal} \cdot crank\ length$

Design Considerations II

3 Material Choice

- **Material: Aluminum 6061-T6**
  - **Lightweight** → ideal for racing bicycle frames
  - **Good strength-to-weight ratio**
  - **Excellent corrosion resistance** • **Affordable and easy to manufacture**
  - **Thicker tubes required**, but still results in a **lighter frame** than steel
  - **Moderate stiffness** but sufficient for racing geometry

- **Safety Factor**

$$SF = \frac{\sigma_{yield}}{\sigma_{\max}}$$

For Aluminum 6061-T6

$$SF \approx 1.5 - 2.0$$

Design Considerations III

Property	Aluminum 6061-T6	Chromoly 4130 Steel	Better for Racing
Yield Strength	275 MPa	650–900 MPa	Steel
Density	2.70 g/cm³ (light)	7.85 g/cm³ (heavy)	Aluminum
Stiffness (E)	69 GPa	210 GPa	Steel
Strength-to-Weight	High	Medium	Aluminum
Fatigue Strength	Moderate	Excellent	Steel
Corrosion Resistance	Excellent	Needs coating	Aluminum
Tensile Strength	310–350 MPa	800–1200 MPa	Steel
Tube Thickness Needed	Thicker, still lighter	Thin-wall possible	Aluminum
Frame Weight	1.3–1.7 kg	2.0–2.5 kg	Aluminum
Suitability	Best for racing	Good for touring	Aluminum

Design Considerations IV

Tube Dimensions Used
Seat Tube: 28 × 25.2 mm, 425 mm
Head Tube: 36 × 32.4 mm, 112 mm
Down Tube: 34 × 31.6 mm, 425 mm
Top Tube: 26 × 25 mm, 375 mm
Seat Stay: 12 × 10.5 mm, 356 mm
Chain Stay: 15 × 14 mm, 256 mm
BB Shell: 46 × 44.2 mm, 140 mm

Aluminum 6061-T6

$$m = 2700 \cdot V_{total}$$

Total Aluminum Mass≈0.47 kg

Chromoly 4130 Steel

$$m = \rho V = 7850 \cdot V_{total}$$

Total Steel Mass ≈ $1.35\ kg$

Material	Tube-Only Mass	Approx. Finished Frame Mass
4130 Steel	**1.35 kg**	2.0–2.4 kg
6061-T6 Aluminum	**0.47 kg**	1.3–1.7 kg

Aluminum is 3× lighter than steel due to lower density
- **Final frame weight difference ≈ 700–1000 g**
- Aluminum allows **better weight optimization** for racing frames
- Steel has higher stiffness but results in a **much heavier frame**

Design I

The racing bike frame consists of:
Top Tube — tension, Down Tube —highest bending stress,Seat Tube Head Tube, Bottom Bracket — maximum combined stresses, Chainstays & Seatstays

Proposed dimensions:
Top Tube = 550 mm
Down Tube = 600 mm
Seat Tube = 520 mm
Head Tube Angle = 72°
Seat Tube Angle = 74°

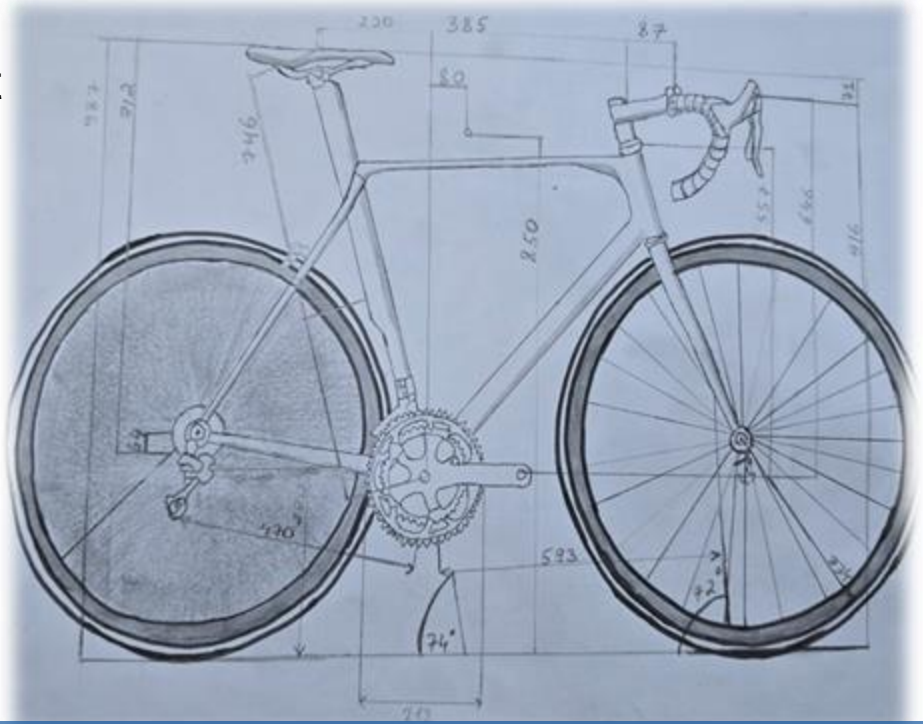

Design II

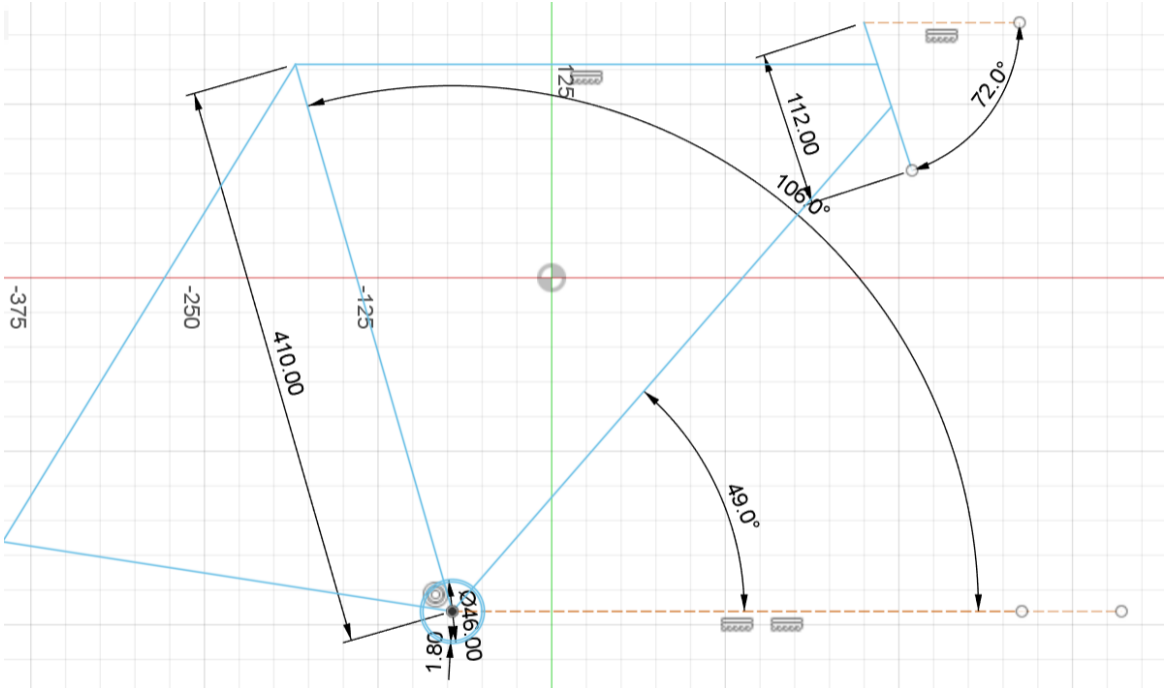

Modeling

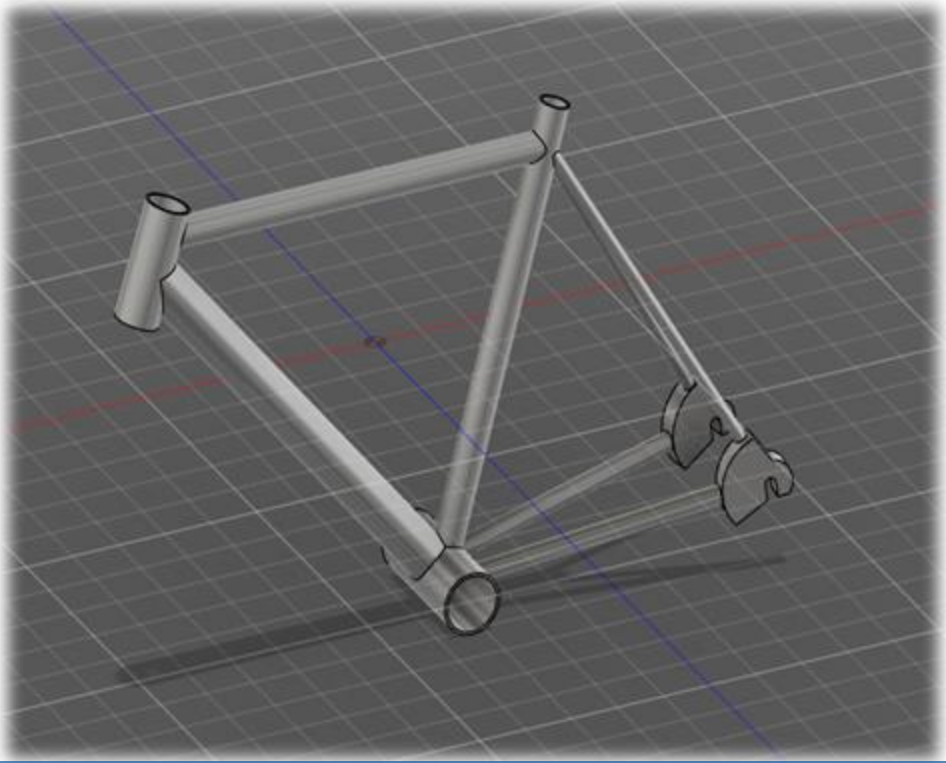

User Parameters				
User Parameter		BottomBracketHei...	mm	280 mm
User Parameter	✘	SeatTubeAngle	deg	73 deg
User Parameter		HeadTubeAngle	deg	73.5 deg
User Parameter		TopTubeCC	mm	560 mm
User Parameter		SeatTubeCT	mm	575 mm
User Parameter		ChainStayLength	mm	410 mm
User Parameter		WheelDiameter	mm	680 mm
User Parameter		ForkRake	mm	45 mm
User Parameter		ForkLength	mm	400 mm
User Parameter		BBWidth	mm	68 mm
User Parameter		BBDiameter	mm	38.00 mm
User Parameter		TTDia	mm	25.40 mm
User Parameter		STDia	mm	28.6 mm
User Parameter		DTDia	mm	31.8 mm
User Parameter		HTDia	mm	30 mm
User Parameter		ChainStayDiameter	mm	19 mm
User Parameter		SeatStayDia	mm	18 mm
Model Parameters				

Analysis I

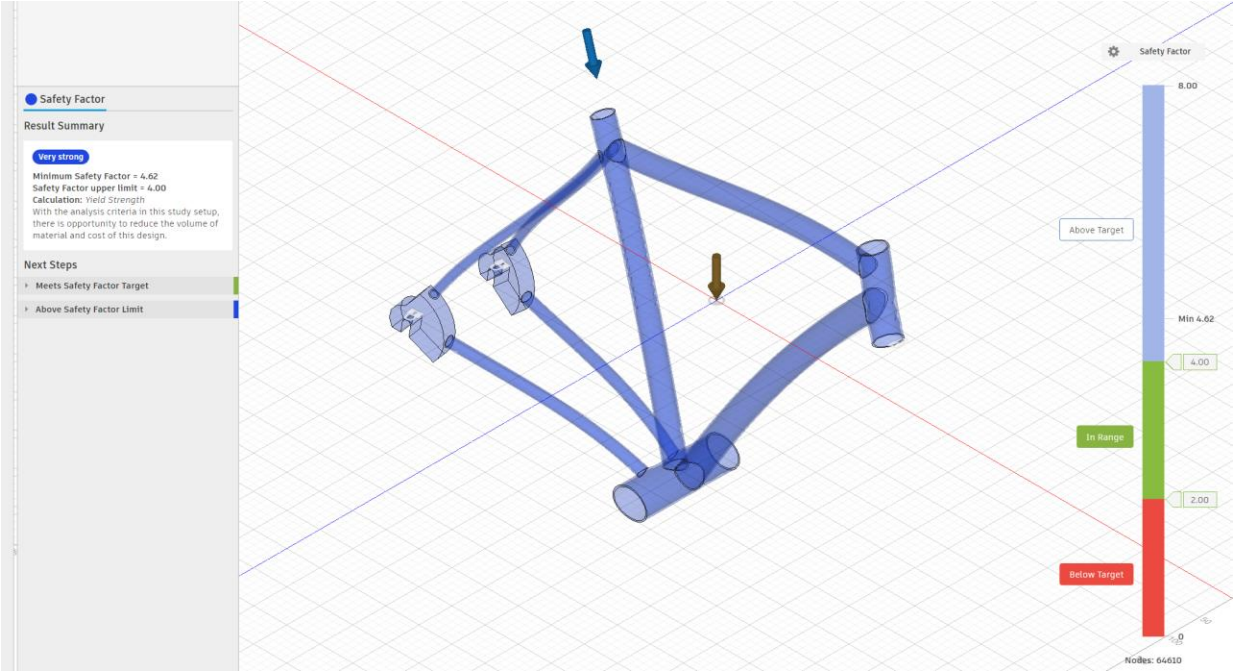

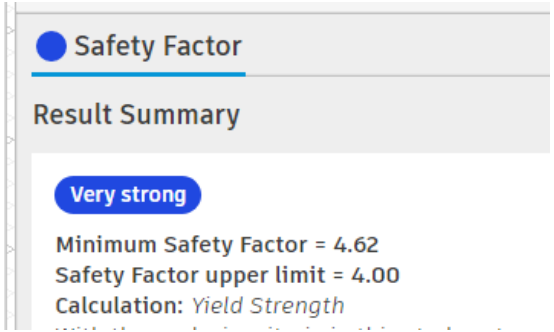

Max. Safety Fac. is 8.00

Analysis II

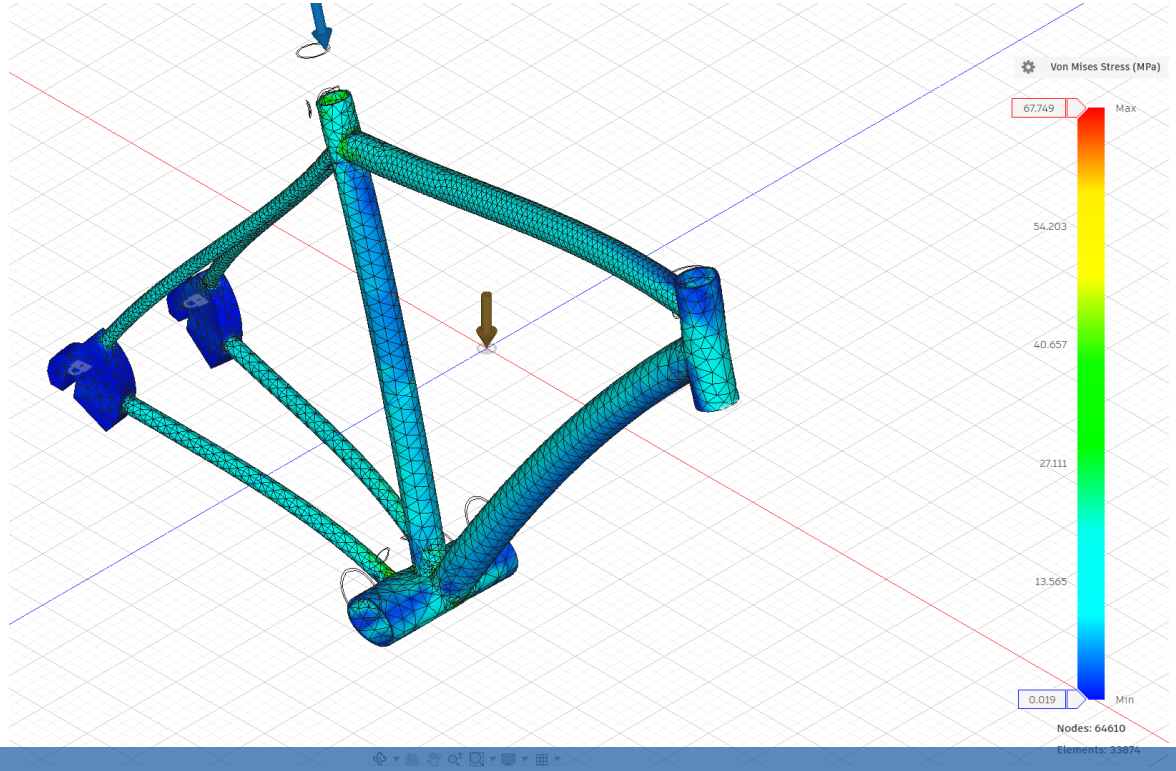

- Stress 21 MPa
- Max Stress 68 MPa

Analysis II (**Axial Stress** $\sigma = \frac{F}{A}$)

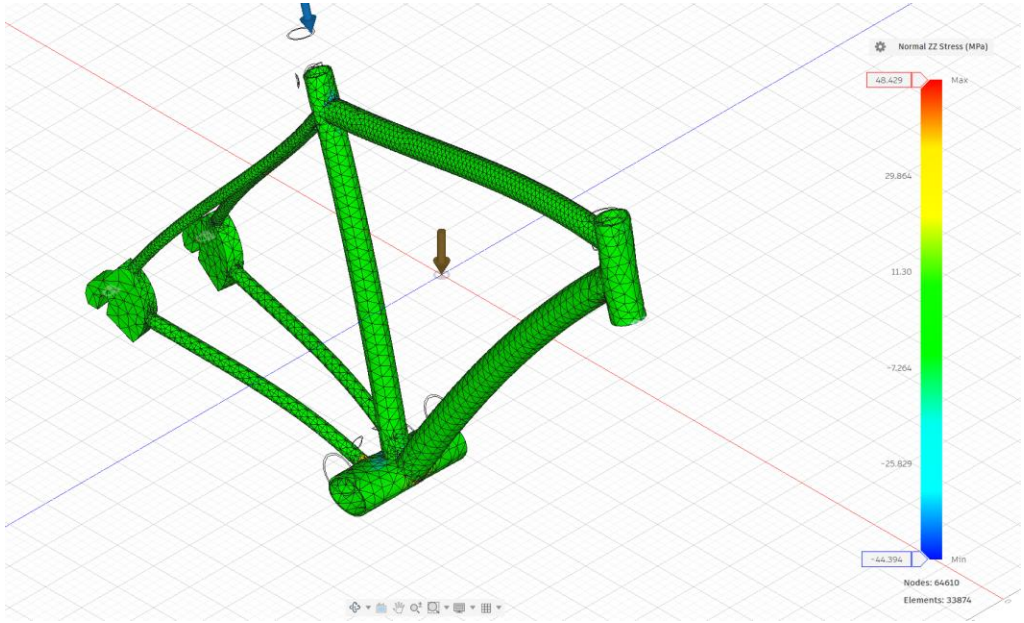

Normal ZZ

Analysis III (**Bending Stress** $\sigma_b = \frac{Mc}{I}$)

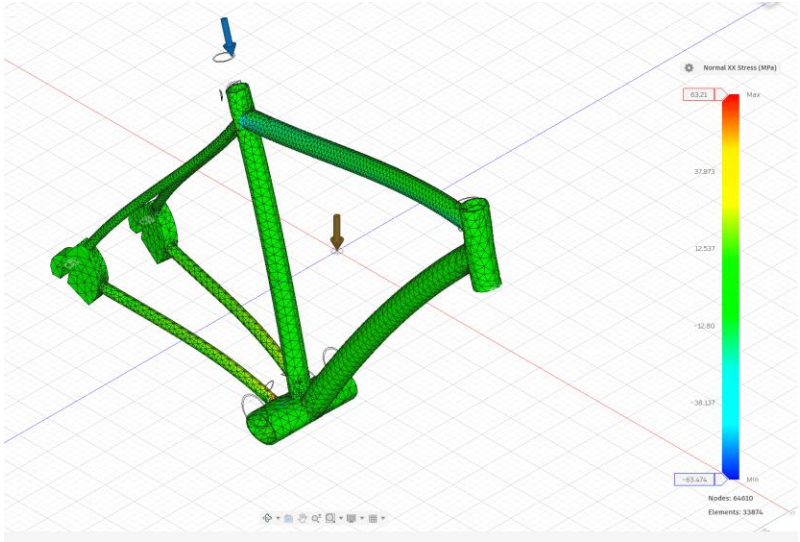

Normal XX

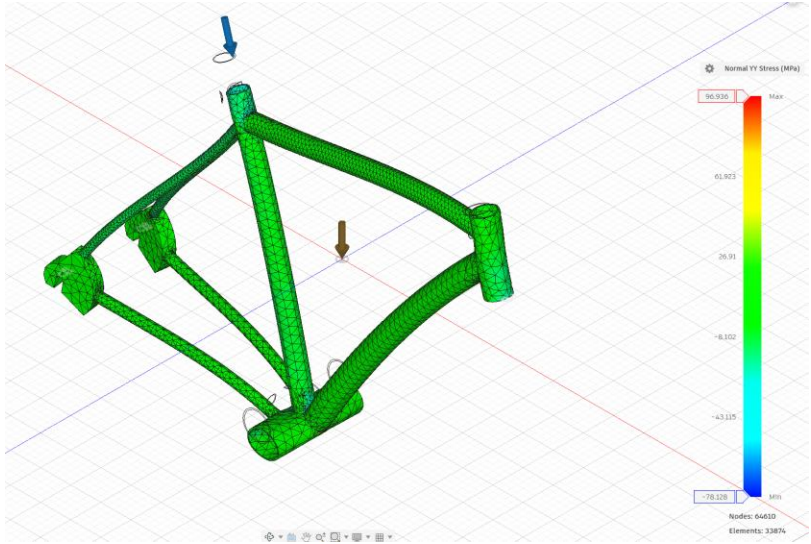

Normal YY

Design Summary I

- The Aluminum 6061-T6 frame provides a **lightweight, corrosion-resistant structure** suitable for racing applications.
  With a good strength-to-weight ratio and larger-diameter tubes, the frame maintains stiffness under pedaling loads while achieving significantly lower mass than steel.
- The **Down Tube and Bottom Bracket** carry the highest stresses—axial compression, bending from rider weight, and torsional loads from pedaling. These tubes form the main load path and strongly influence global frame stiffness and responsiveness.
- The selected geometry supports **stable, aerodynamic racing performance**. Tube angles and lengths ensure balanced stiffness, sharp steering response, and efficient transfer of rider power into the drivetrain.

Design summary II

- Stress analysis shows that the aluminum frame operates within safe limits, with acceptable deformation due to its lower modulus.
  Maximum stresses remain below the yield strength of 6061-T6, with a typical safety factor of **1.5–2.0** for racing applications.
- The design is ready for additional FEA refinement, including joint optimization, tube-thickness tuning, and torsional-fatigue evaluation. These improvements can further reduce weight while maintaining structural integrity.

Future improvements

1. Aerodynamic Frame

- Airfoil tube shapes reduce drag.
- $F_d = \frac{1}{2}\rho v^2 C_d A$

2 . Power Meter Integration

- Measures rider power for performance tuning.
- $P = \tau\omega$

3. Electronic Shifting

- Faster, precise gear changes (Di2 / AXS).
- No cable friction → stable performance.

4. Carbon Layup Optimization

- Higher stiffness with lower mass.
- Increases bending and torsion resistance.

Future improvements II

5. Vibration Damping

- Seatpost/handlebar dampers for comfort.
- $\delta = \frac{PL}{AE}$

6.Deep-Section Aerodynamic Wheels

- Better efficiency at high speeds.
- Reduced turbulence and energy loss.

7. Stiffer Bottom Bracket Zone

- Improved power transfer during sprinting.
- $\sigma = \frac{Mc}{I}$

Individual Contributions

Fazliddin
Developed frame geometry model
Performed load identification and structural reasoning
Conducted stress calculations (axial, bending, torsion)
Prepared main presentation narrative

Maftuna
Collected reference data from literature
Analyzed material properties (Al6061-T6 vs Carbon Fiber)
Helped define safety factor requirements

Sherali
Worked on free-body diagrams (FBD)
Identified main force directions and reaction points
Helped describe load paths through frame members

Vitaliy
Assisted with geometric parameter selection
Evaluated wheelbase, tube angles, and sizing constraints
Supported modeling of bottom bracket forces

Individual Contributions

Asadbek
Calculated bending moments and torque effects
Helped derive section properties (moment of inertia, polar moment)
Compared stress levels across frame components

Mirjahon
Organized design considerations (geometry, loads, materials)
Structured visual elements of slides
Ensured clarity and readability of the presentation

Zikrilloh
Summarized analysis results and design conclusions
Helped create the design summary slide
Reviewed consistency across all sections

References

1. Taylor & Francis — *Bicycle Frame Design: Engineering Principles*
2. Parkin, J. — *Design of Modern Bike Frames*
3. ASM Material Handbook — Al6061-T6 properties
4. Research on cycling biomechanics
5. ISE2134: Structural Analysis of Mobility course materials

THANK YOU