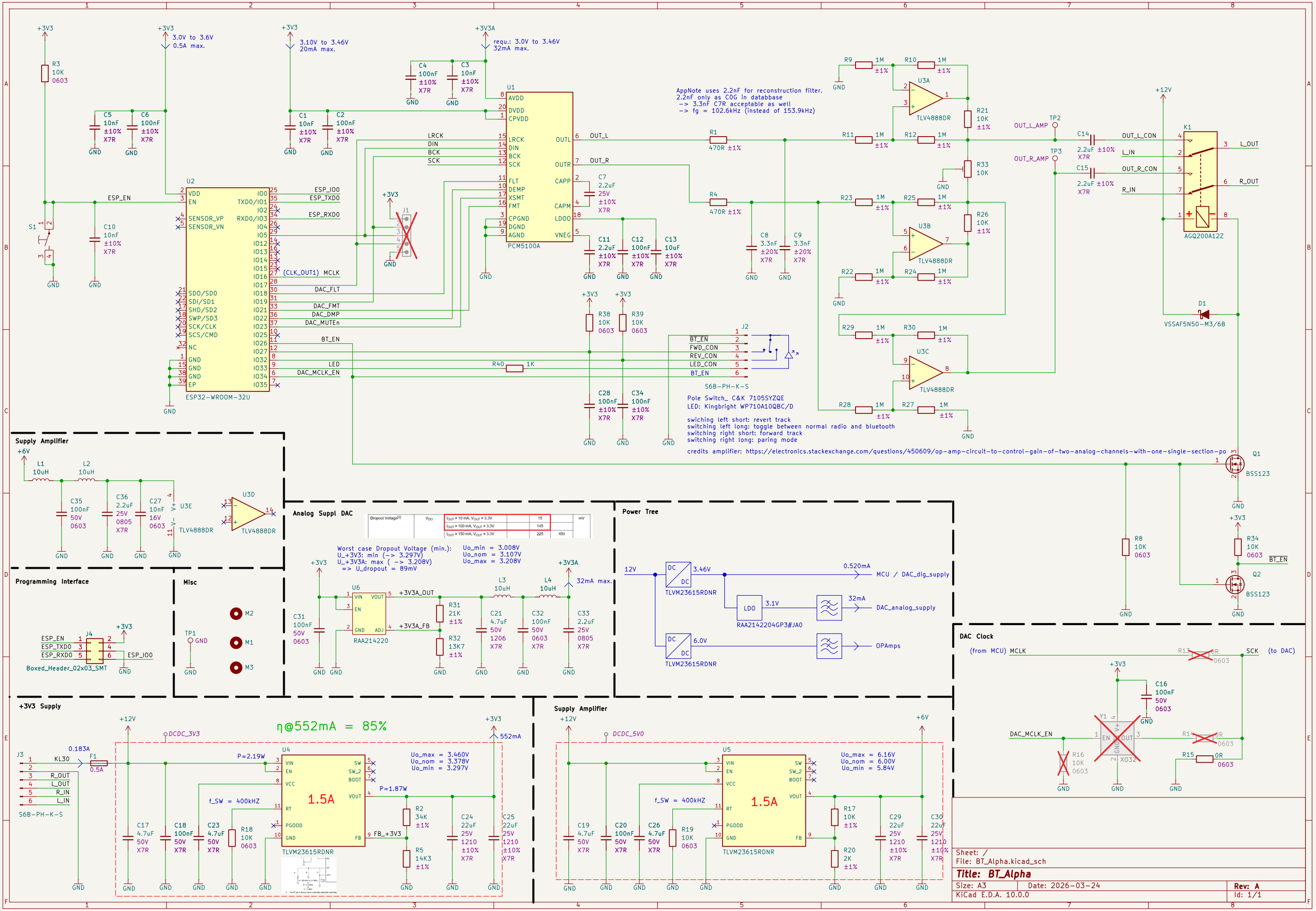
+3V3
3.0V to 3.6V
0.5A max.
3.10V to 3.46V
20mA max.
+3V3A
requ.: 3.0V to 3.46V
32mA max.
R3
10K
0603
C5
10nF
±10%
X7R
C6
100nF
±10%
X7R
C4
100nF
±10%
X7R
C3
10nF
±10%
X7R
C1
10nF
±10%
X7R
C2
100nF
±10%
X7R
GND
U1
AVDD
DVDD
CPVDD
LRCK
DIN
BCK
SCK
FLT
DEMP
XSMT
FMT
CPGND
DGND
AGND
OUTL
OUTR
CAPP
CAPM
LDOO
VNEG
PCM5100A
OUT_L
OUT_R
C7
2.2uF
25V
±10%
X7R
C11
2.2uF
±10%
X7R
C12
100nF
±10%
X7R
C13
10uF
±10%
X7R
AppNote uses 2.2nF for reconstruction filter.
2.2nF only as C0G in databbase
-> 3.3nF C7R acceptable as well
-> fg = 102.6kHz (instead of 153.9kHz)
R1
470R ±1%
R4
470R ±1%
C8
3.3nF
±20%
X7R
C9
3.3nF
±20%
X7R
R9
1M
±1%
R10
1M
±1%
U3A
TLV4888DR
R11
1M
±1%
R12
1M
±1%
R21
10K
±1%
R33
10K
R23
1M
±1%
R25
1M
±1%
U3B
TLV4888DR
R26
10K
±1%
R22
1M
±1%
R24
1M
±1%
R29
1M
±1%
R30
1M
±1%
U3C
TLV4888DR
R28
1M
±1%
R27
1M
±1%
TP2
OUT_L_AMP
TP3
OUT_R_AMP
C14
2.2uF ±10%
X7R
C15
2.2uF ±10%
X7R
OUT_L_CON
L_IN
OUT_R_CON
R_IN
+12V
K1
AGQ200A12Z
L_OUT
R_OUT
D1
VSSAF5N50-M3/6B
ESP_EN
S1
C10
10nF
±10%
X7R
U2
VDD
EN
SENSOR_VP
SENSOR_VN
SDO/SD0
SDI/SD1
SHD/SD2
SWP/SD3
SCK/CLK
SCS/CMD
NC
GND
EP
IO0
TXD0/IO1
RXD0/IO3
(CLK_OUT1) MCLK
DAC_FLT
DAC_FMT
DAC_DMP
DAC_MUTEn
BT_EN
LED
DAC_MCLK_EN
ESP32-WROOM-32U
ESP_IO0
ESP_TXD0
ESP_RXD0
J1
R38
10K
0603
R39
10K
0603
R40
1K
J2
BT_EN
FWD_CON
REV_CON
LED_CON
S6B-PH-K-S
C28
100nF
±10%
X7R
C34
100nF
±10%
X7R
Pole Switch_ C&K 7105SYZQE
LED: Kingbright WP710A10QBC/D
swiching left short: revert track
switching left long: toggle between normal radio and bluetooth
switching right short: forward track
switching right long: paring mode
credits amplifier: https://electronics.stackexchange.com/questions/450609/op-amp-circuit-to-control-gain-of-two-analog-channels-with-one-single-section-po
Q1
BSS123
R8
10K
0603
R34
10K
0603
Q2
BSS123
Supply Amplifier
+6V
L1
10uH
L2
10uH
C35
100nF
50V
0603
C36
2.2uF
25V
0805
X7R
C27
10nF
16V
0603
U3E
U3D
TLV4888DR
Programming Interface
J4
ESP_EN
ESP_TXD0
ESP_RXD0
ESP_IO0
Boxed_Header_02x03_SMT
Misc
TP1
M2
M1
M3
Analog Suppl DAC
Dropout Voltage[2]
VDO
IOUT = 10 mA, VOUT = 3.3V
IOUT = 100 mA, VOUT = 3.3V
IOUT = 150 mA, VOUT = 3.3V
15
145
225
450
mV
Worst case Dropout Voltage (min.):
U_+3V3: min (-> 3.297V)
U_+3V3A: max (-> 3.208V)
=> U_dropout = 89mV
Uo_min = 3.008V
Uo_nom = 3.107V
Uo_max = 3.208V
U6
VIN
VOUT
EN
GND
ADJ
RAA214220
+3V3A_OUT
+3V3A_FB
R31
21K
±1%
R32
13K7
±1%
L3
10uH
L4
10uH
32mA max.
C31
100nF
50V
0603
C21
4.7uF
50V
1206
X7R
C32
100nF
50V
0603
X7R
C33
2.2uF
25V
0805
X7R
Power Tree
12V
DC
DC
3.46V
TLVM23615RDNR
0.520mA
MCU / DAC_dig_supply
LDO
3.1V
RAA2142204GP3#JA0
32mA
DAC_analog_supply
6.0V
OPAmps
DAC Clock
(from MCU) MCLK
R13
0R
0603
SCK
(to DAC)
C16
100nF
50V
0603
Y1
XO32
DAC_MCLK_EN
R14
0R
0603
R16
10K
0603
R15
0R
0603
+3V3 Supply
η@552mA = 85%
+12V
DCDC_3V3
0.183A
J3
KL30
F1
0.5A
R_OUT
L_OUT
R_IN
L_IN
S6B-PH-K-S
P=2.19W
U4
VIN
EN
VCC
RT
PGOOD
GND
SW
SW_2
BOOT
VOUT
FB
1.5A
TLVM23615RDNR
f_SW = 400kHZ
Uo_max = 3.460V
Uo_nom = 3.378V
Uo_min = 3.297V
P=1.87W
FB_+3V3
552mA
C17
4.7uF
50V
X7R
C18
100nF
50V
X7R
C23
4.7uF
50V
X7R
R18
10K
0603
R2
34K
±1%
R5
14K3
±1%
C24
22uF
25V
1210
±10%
X7R
C25
22uF
25V
1210
±10%
X7R
Supply Amplifier
DCDC_5V0
U5
1.5A
TLVM23615RDNR
Uo_max = 6.16V
Uo_nom = 6.00V
Uo_min = 5.84V
C19
4.7uF
50V
X7R
C20
100nF
50V
X7R
C26
4.7uF
50V
X7R
R19
10K
0603
R17
10K
±1%
R20
2K
±1%
C29
22uF
25V
1210
±10%
X7R
C30
22uF
25V
1210
±10%
X7R
Sheet: /
File: BT_Alpha.kicad_sch
Title: BT_Alpha
Size: A3
Date: 2026-03-24
Rev: A
KiCad E.D.A. 10.0.0
Id: 1/1