PSPICE PROJECT

Moshe Sofer – 315038232
Maor Dalal – 207270117

Moshe Sofer	3	1	5	0	3	8	2	3	2
Maor Dalal	2	0	7	2	7	0	1	1	7
sum	5	2	2	3	0	8	3	4	9
Letters	A	B	C	D	E	F	G	H	I

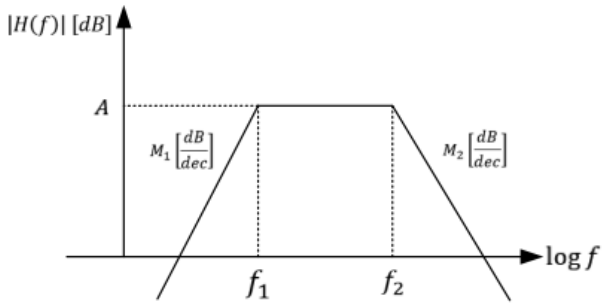

The designed amplifier's specs according to the summation results of the IDs:

$A = (32 + 2D) = 38\ [dB]$

$f_L = G + H = 7\ [kHz]$

$f_H = (G + H) * 100 = 700\ [kHz]$

C is even: $M_1 = 40\left[\frac{dB}{dec}\right]$ $\qquad M_2 = -20[\frac{dB}{dec}]$

$R_{out} = 3 + F = 11\ [k\Omega]$

A and D are both odd :

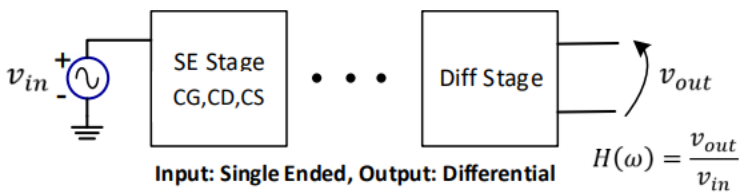

Transistor parameters:

$$k = 1\left[\frac{mA}{V^2}\right], V_{TH} = 0.5\ [V], \lambda = 0, . C_{gs} = C_{gd} = 0\ [F]$$

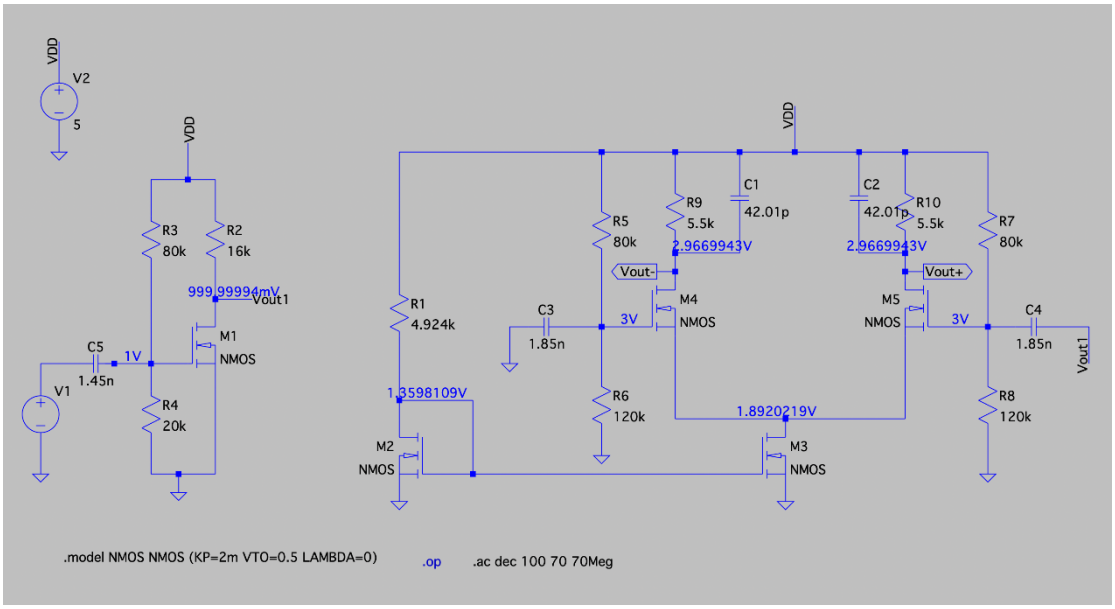

First stage (left):

The first stage is a Common Source amplifier(M1) of our single Ended input. This type of stage increases the gain of the input and introduces a 180 degrees phase shift .The R3 and R4 resistors provide a voltage divider to set the DC voltage of the gate and set the transistor's bias point .The C5 Capacitor is a DC coupling capacitor which isolates the DC bias point from the signal source and the ground , and it also allows us to impact the band width of the amplifier mainly on the low frequencies . The R2 resistor is in parallel to R8||R7(in the AC analysis only) and the three of them together determines the voltage gain of the first stage .

Second Stage (middle +right):

The second stage uses a current mirror (M2 and M3) to set a fixed tail current for the differential amplifier. The differential amplifier itself (M4 and M5) is fully symmetrical by its design so the current from the current mirror splits equally between the M5 and M4 transistors. This stage provides additional gain and produces the required differential output. The gate of the M4 transistor is grounded (in small signal) while the output of the CS, which is the first stage, is connected to the M5's gate.

C4 acts as a DC coupling capacitor which transfers the signal between stages without affecting the DC bias points. C3 serves as a bypass capacitor connected to the gate of M4. Its main purpose is to ensure a stable 'AC Ground' for the differential pair's reference input, preventing noise and fluctuations from affecting the amplifier's balance. While C4

contributes to the low-frequency cutoff (f_L), C3 is sized to be effectively a short circuit at operational frequencies.

C1 and C2 capacitors are used as high frequency gain modifiers and basically help take down the gain in high frequencies and by that control the band width of the amplifier on the high frequencies. The R1 resistor is used to control the current mirror (M2 and M3). The R5 and R6 resistors and the R7 and R8 provide a voltage divider to set the gates' DC voltages for the M4 and M5 transistors and set their bias points . R9 and R10 are both used to increase the gain in the middle frequencies to the desired value.

Bias points calculations

M1:

$$V_{G1} = V_{DD}\frac{R_4}{R_4 + R_3} = 1$$

$$V_{GS1} = 1\ [V]$$

transistor is active : $V_{GS1} > V_T$

Assume saturation: $I_{D1} = \frac{1}{2}k_p(V_{GS1} - V_T)^2 = 1(0.5)^2 = 0.25\ [mA]$

$$V_{DS1} = V_{DD} - R_2 I_{D1} = 5 - 4 = 1\ [V]$$

$V_{DS1} > V_{GS1} - V_T \qquad Therefore\ ,\ \ M1\ \ is\ in\ saturation$

$\boldsymbol{M1: V_{GS1} = 1\ [V] \qquad I_{D1} = 0.25[mA] \qquad V_{DS1} = 1\ [V]}$

M2:

$$V_{G2} = V_{D2}$$

$$V_{S2} = 0$$

$$V_{G2} - V_{S2} = V_{GS2} = V_{G2} = V_{D2}$$

$$Assume\ saturation: \frac{V_{DD} - V_{D2}}{R_1} = \frac{1}{2}k_p(V_{D2} - V_T)^2 = (V_{D2} - 0{,}5)^2$$

$$0 = {V_{D2}}^2 - 0.797V_{D2} - 0.765$$

$V_{D2} = 1.36[V] \qquad V_{D2} = -0.563 \rightarrow disqualified\ since\ it\ is\ negative$

$$\frac{V_{DD} - V_{D2}}{R_1} = I_{D2} = 0.739\ [mA]$$

$V_{GS2} > V_T\ Transistor\ is\ active$

$V_{D2} > V_{GS2} - V_T \qquad Therefore\ ,\ \ M2\ \ is\ in\ saturation$

$\boldsymbol{M2: V_{GS2} = 1.36\ [V] \qquad I_{D2} = 0.739[mA] \qquad V_{D2} = 1.36\ [V]}$

M3:

$V_{GS2} = V_{GS3} = 1.36[V]$

$Assume\ saturation: I_{D3} = \frac{1}{2}k_p(V_{GS3} - V_T)^2 = 0.739[mA] \rightarrow current\ mirror]$

$V_{G4} = V_{DD}\dfrac{R_6}{R_6 + R_6} = 3\ [V] \qquad V_{G5} = V_{DD}\dfrac{R_8}{R_8 + R_7} = 3\ [V]$

$From\ symmetry:\ \ I_{D4} = I_{D5} = \dfrac{1}{2}I_{D3} = 0.3695\ [mA]$

$Given\ the\ symmetrical\ design\ , we\ will\ analyze\ M4\ and\ apply\ the\ findings\ directly\ to\ M5$

$V_{DD} - I_{D4}R_9 = V_{D4} = V_{D5} = 2.967[V]$

$V_{S4} = V_{S5} = V_{D3}$

$Assume\ saturation: I_{D4} = \dfrac{1}{2}k_p(V_{GS4} - V_T)^2 = (V_{G4} - V_{S4} - V_T)^2 = (2.5 - V_S)^2 = 0.3695$

$0 = {V_{S4}}^2 - 5V_{S4} + 5.8805$

$V_{S4} = 3.108\ \rightarrow too\ big\ V_{S4} = 1.892$

$V_{GS4} = V_{G4} - V_{S4} = V_{GS5} = 1.108\ [V]$

$V_{DS4} = V_{DS5} = V_{D4} - V_{S4} = 1.075\ [V]$

$V_{GS4} > V_T\ \ and\ V_{DS4} > V_{GS4} - V_T\ so\ M4\ and\ M5\ are\ indeed\ in\ saturation$

$V_{DS3} > V_{GS3} - V_T\ so\ M3\ is\ also\ in\ saturation$

$\boldsymbol{M3: V_{GS3} = 1.36\ [V] \qquad I_{D3} = 0.739[mA] \qquad V_{DS3} = 1.892\ [V]}$

$\boldsymbol{M4: V_{GS4} = 1.108\ [V] \qquad I_{D4} = 0.3696[mA] \qquad V_{DS4} = 1.075\ [V]}$

$\boldsymbol{M5: V_{GS5} = 1.108\ [V] \qquad I_{D5} = 0.3696[mA] \qquad V_{DS5} = 1.075\ [V]}$

DC Operating Point Validation:

The following table compares our calculated bias points with the SPICE simulation results (from the .op output):

--- MOSFET Transistors ---

Name:	m2	m3	m4	m5	m1
Model:	nmos	nmos	nmos	nmos	nmos
Id:	7.39e-04	7.39e-04	3.70e-04	3.70e-04	2.50e-04
Vgs:	1.36e+00	1.36e+00	1.11e+00	1.11e+00	1.00e+00
Vds:	1.36e+00	1.89e+00	1.07e+00	1.07e+00	1.00e+00
Vbs:	0.00e+00	0.00e+00	0.00e+00	0.00e+00	0.00e+00
Vth:	5.00e-01	5.00e-01	5.00e-01	5.00e-01	5.00e-01
Vdsat:	8.60e-01	8.60e-01	6.08e-01	6.08e-01	5.00e-01
Gm:	1.72e-03	1.72e-03	1.22e-03	1.22e-03	1.00e-03
Gds:	0.00e+00	0.00e+00	0.00e+00	0.00e+00	0.00e+00
Gmb:	0.00e+00	0.00e+00	0.00e+00	0.00e+00	0.00e+00
Cbd:	0.00e+00	0.00e+00	0.00e+00	0.00e+00	0.00e+00
Cbs:	0.00e+00	0.00e+00	0.00e+00	0.00e+00	0.00e+00
Cgsov:	0.00e+00	0.00e+00	0.00e+00	0.00e+00	0.00e+00
Cgdov:	0.00e+00	0.00e+00	0.00e+00	0.00e+00	0.00e+00
Cgbov:	0.00e+00	0.00e+00	0.00e+00	0.00e+00	0.00e+00
Cgs:	0.00e+00	0.00e+00	0.00e+00	0.00e+00	0.00e+00
Cgd:	0.00e+00	0.00e+00	0.00e+00	0.00e+00	0.00e+00
Cgb:	0.00e+00	0.00e+00	0.00e+00	0.00e+00	0.00e+00

The following table compares our calculated bias points with the SPICE simulation results (from the .op output):

Parameter	Calculated Value	Simulated Value	Error (%)
M1 (I_D)	0.25 mA	0.25 mA	0%
M1 (V_{DS})	1.0 V	1.0 V	0%
M2, M3 (I_D)	0.739 mA	0.739 mA	0%
M4, M5 (I_D)	0.3696 mA	0.370 mA	0.1%
M4, M5 (V_{DS})	1.075 V	1.07 V	0.4%

The simulation results validate our manual DC analysis . The values for drain currents and DS voltages match our calculations with a tiny error (less than 1%), ensuring the transistors are properly biased in the saturation region as designed .

Small signal gain analysis (mid band frequency)

$first\ stage\ CS$:

$$gm_1 = 2\sqrt{I_{D4}\frac{1}{2}k_p} = 1[\frac{1}{k\ ohm}]$$

$$\frac{v_{out1}}{v_{in}} = -gm_1 R_2||(R_8||R_7) = -12 = Av1$$

$The\ differential\ stage$:

$$gm_5 = gm_4 = 2\sqrt{I_{D4}\frac{1}{2}k_p} = 1.216\ [\frac{1}{k\ ohm}]$$

$$gm_5(v_{out1} - v_s) = gm_4(0 - v_s)$$

$$v_s = \frac{1}{2}v_{out1} \qquad i_4 = -gm_4\frac{1}{2}v_{out1} \qquad i_5 = gm_5\frac{1}{2}v_{out1}$$

$$v_- = -gm_4\tfrac{1}{2}v_{out1}R_9 = 40.128$$

$$v_+ = gm_5\frac{1}{2}v_{out1}R_{10} = -40.128$$

$$v_+ - v_- = 80.256 = A_d$$

$$\boldsymbol{In\ dB - 20\ log_{10}(|80.256|) = 38.089\ dB\ as\ requested}$$

AC simulation with gain and cutoff frequencies

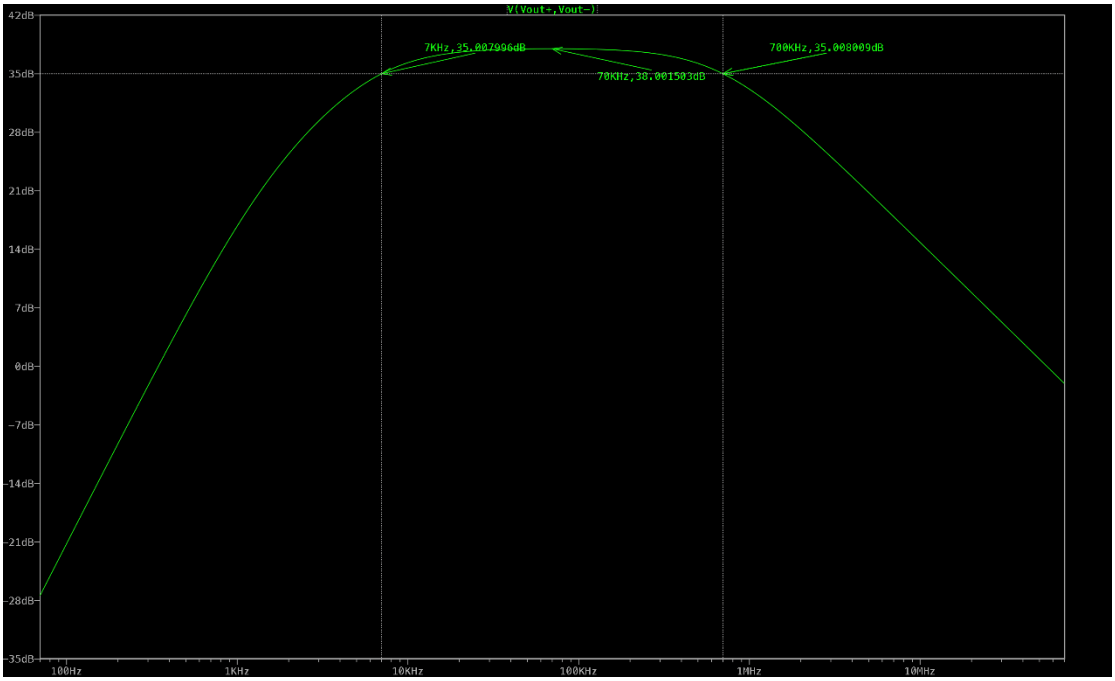

Trace color	*Trace name*	*Mid band*	f_L	f_H
	X values	*70 [kHz]*	*7 [kHz]*	*700 [kHz]*
green	$\left\lvert \frac{V(V_{out+}) - V(V_{out-})}{V(V_{in1})} \right\rvert_{dB}$	*38.001 dB*	*35.007 dB*	*35.008 dB*

The AC simulation results demonstrate a precise match with the design specifications derived from our ID parameters.

Gain : The simulated mid band gain is 38.001 dB, which is almost identical to the required 38 dB (error $< 0.01\%$).
Bandwidth : The -3dB cutoff frequencies were measured exactly at 7 kHz (f_L) and 700 kHz (f_H), confirming that the bandwidth requirements are fully met.

Slope ($\frac{dB}{dec}$):

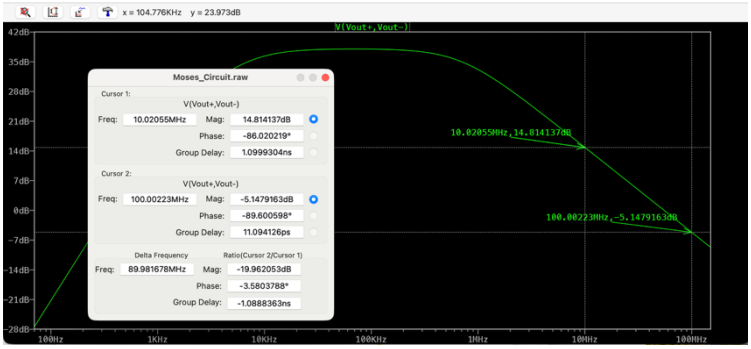

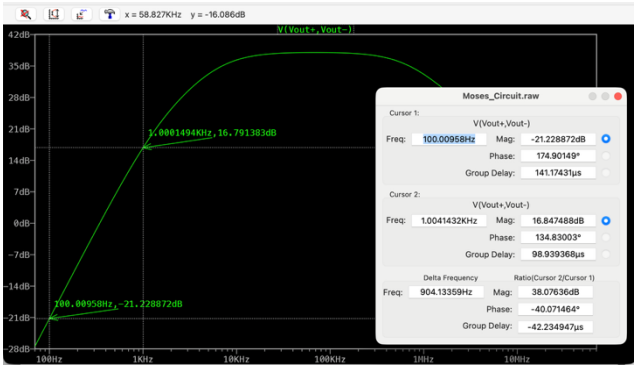

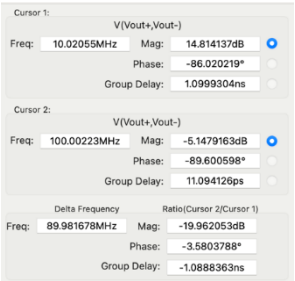

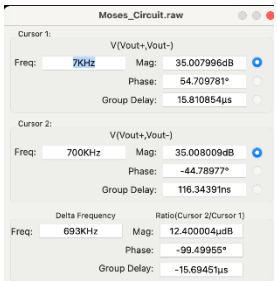

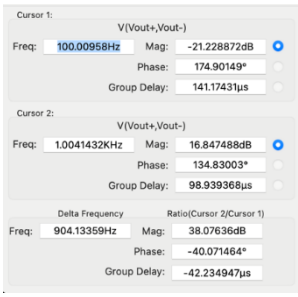

$$M_1 = 38.076 \left[\frac{dB}{dec}\right] \quad , \quad M_2 = -19.962 \left[\frac{dB}{dec}\right]$$

Slope Analysis (M_1): The steep slope of approx. 40dB/dec in the low frequencies is achieved by the combined effect of two high pass filters acting in series : the input coupling capacitor (C5) and the inter-stage coupling capacitor (C4). Since both capacitors create poles in the low frequency region , the resulting roll-off is of a second-order system $\left(2 \times 20 \frac{dB}{dec}\right)$.

Slope Analysis (M_2): The high frequency slope of -20dB/dec is determined by the dominant poles formed at the output nodes. The load capacitors C1 and C2 (in parallel with R9 and R10 respectively) create a first order Low Pass Filter behavior, causing the gain to drop at a rate of -20dB/dec beyond the cut-off frequency f_H.

The following table summarizes the comparison between the obtained simulation results and the design requirements, including the percentage error for each parameter :

	Value	Required value	Error
Mid band gain	38.001		
f_L	*7 [kHz]*	*7 [kHz]*	0%
f_H	*700 [kHz]*	*700 [kHz]*	0%
M_1	$38.076\left[\frac{dB}{dec}\right]$	$40\left[\frac{dB}{dec}\right]$	4.8%
M_2	$-19.962\left[\frac{dB}{dec}\right]$	$-20[\frac{dB}{dec}]$	0.19 %

No error exceeded the 5 % mark , therefore it follows the error guidelines in the project.

Output resistance vs. frequency and Power consumption

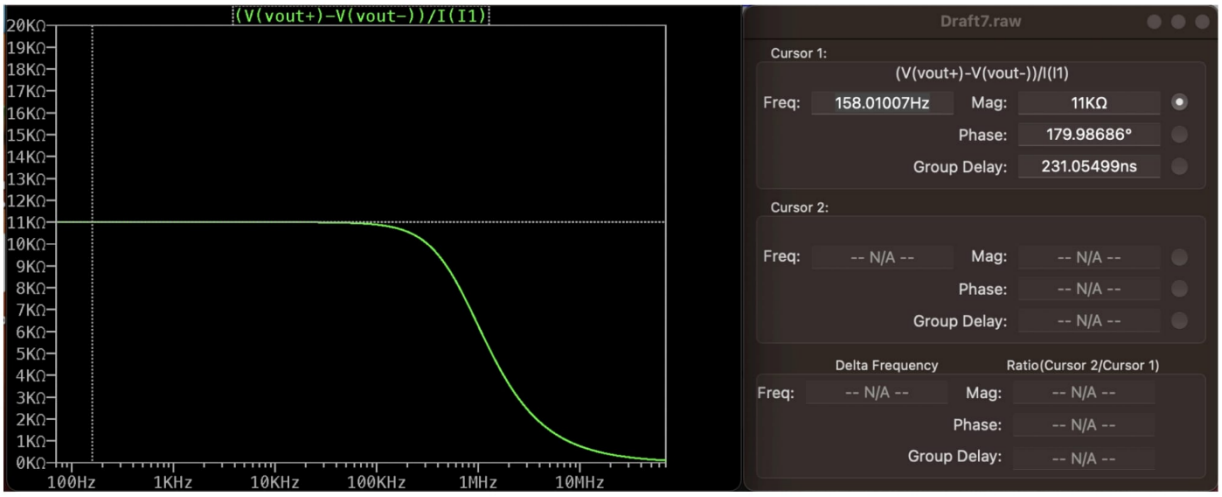

The output resistance is: $R_{out} = 11[k\Omega]$

The simulation graph confirms this calculation: at mid-band frequencies (flat region), the impedance is stable at $approx. 11k\Omega$. At higher frequencies, the impedance drops down because capacitors C1 and C2 provide a low-impedance path to the AC ground .

The current running through VDD for power consumption:

```
I(V2)                    -0.00182855    device_current
```

From here we can get the total power consumption :

$$P_{tot} = VDD * I_{VDD} = 5(0.001813) = 9.065mW$$

	In the circuit	Limitations
Total resistance	0.5319M ohm	5M ohm
Total capacitance	0.003784mF	1mF
Power consumption	0.009065W	0.1W
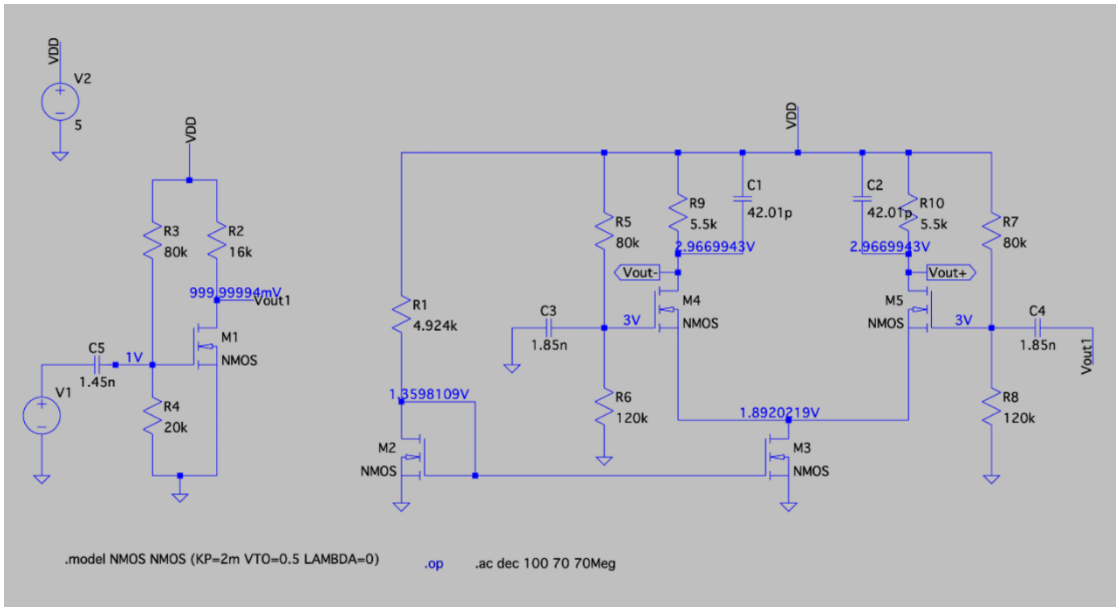
As shown in the table, the designed circuit adheres to all physical limitations .The total resistance, capacitance, and power consumption are significantly lower than the maximum allowed values , ensuring an efficient and compliant design.