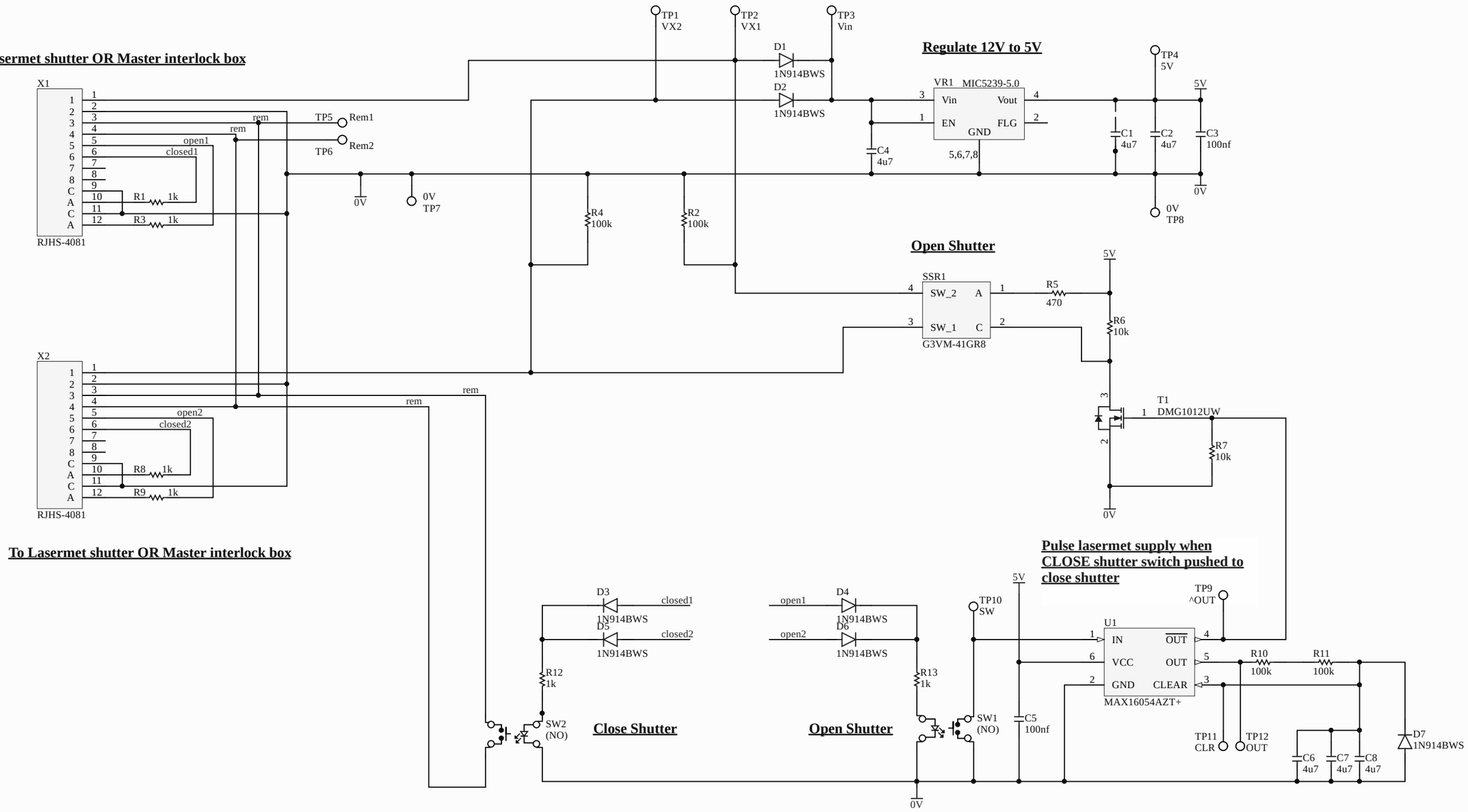

Title	***Remote LaserMet Shutter Switch***		*Electronics Section* *The University of Manchester* *School of Chemistry* *Tel. 0161 275 4641* *RM 2.318*
Size: A3	Job No: 3880	Filing Reference: 1345	Revision:
Date: 06/03/2019	Time: 08:31:51	Sheet 1 of 1	
File: Y:\Electronics Section\Working Designs\FR1345_Job3880_PSI Lasermet Shutter Controler\Altium_LaserMet Shutter Control\Main.SchDoc			

MANCHESTER 1824
The University of Manchester