Digital Power Supply

Power Adapter & Switch

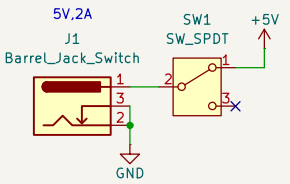

Note: The maximum input voltage is 5V
The 5V powers the LDOs, Power LED, and LCD.

3.3V,2A LDO

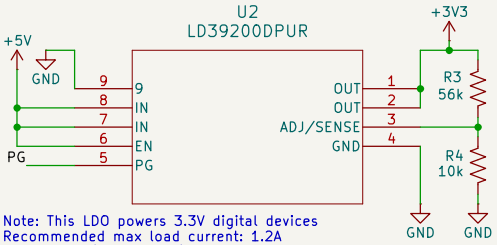

Note: This LDO powers 3.3V digital devices
Recommended max load current: 1.2A
Vout = Vadj(1 + R3/R4), Vadj = 0.5V
LDO on: EN > 1.2V
LDO off: EN < 0.5V
PG(Power Good):
Hi-Z when Vout > 0.92 * 3.3
Lo-Z when Vout < 0.80 * 3.3

PG monitors the quality of the LDO's output.

LDO Capacitors

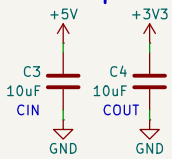

LDO Output Status

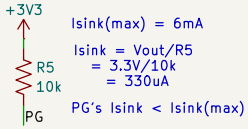

Power LED

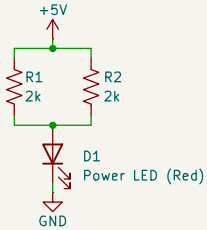

Analog Power Supply

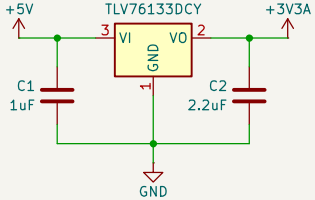

Note: Strictly for analog components
Recommended max load current: 300mA

Reset & Boot Pins

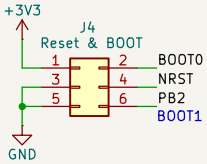

Mounting Holes

Microcontroller Pins, ST-Link, and Test Points

ST-Link

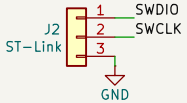

PCF8563 RTC Clock Output

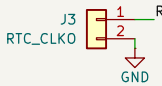

Test:
Probe RTC_CLKO with an oscilloscope.
Freq(RTC_CLKO) -> 32.768kHz

LD39200 Power Good

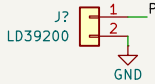

Test:
V(PG) -> 3.3V when output is ok
V(PG) -> 0.0V when output is not ok
Measure V(PG) with a multimeter.

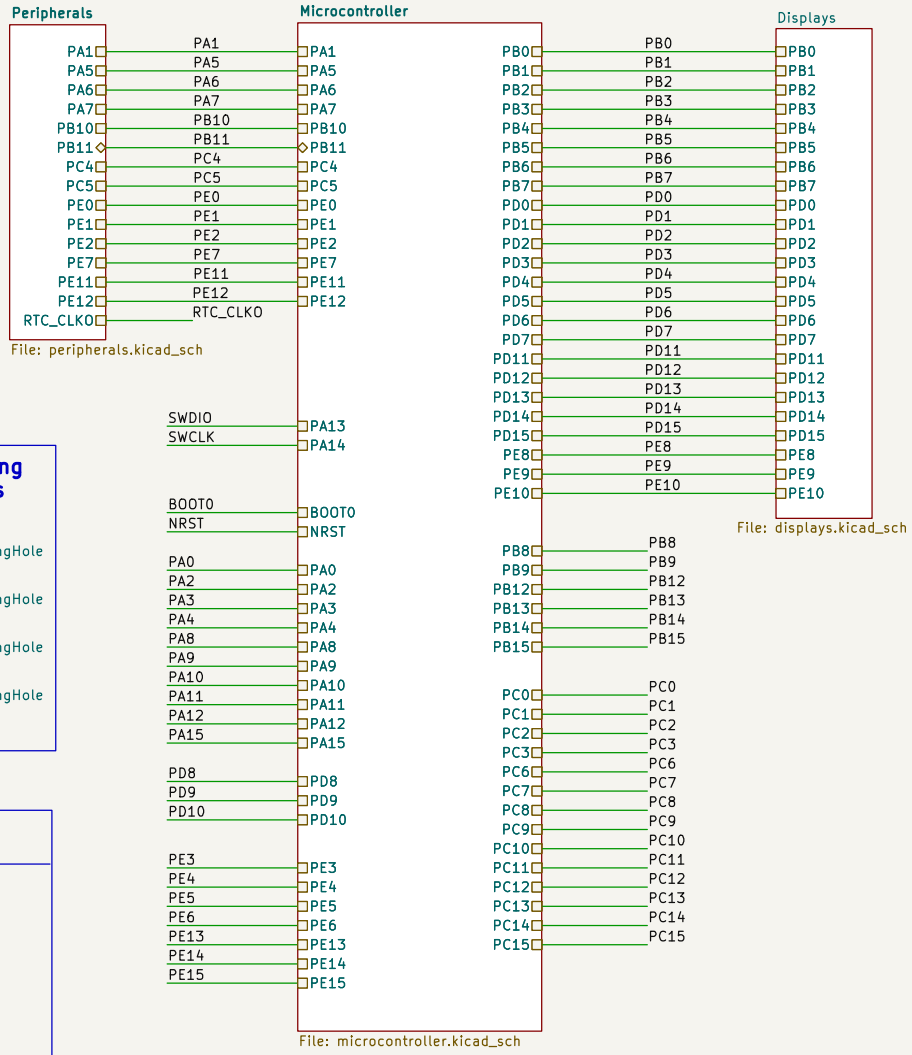

Sheet: /
File: rjx_training_kit.kicad_sch

Title: RJX Embedded Training Kit

Size: A4	Date: 2025-02-10	Rev: 1.0
KiCad E.D.A. 8.0.6		Id: 1/4

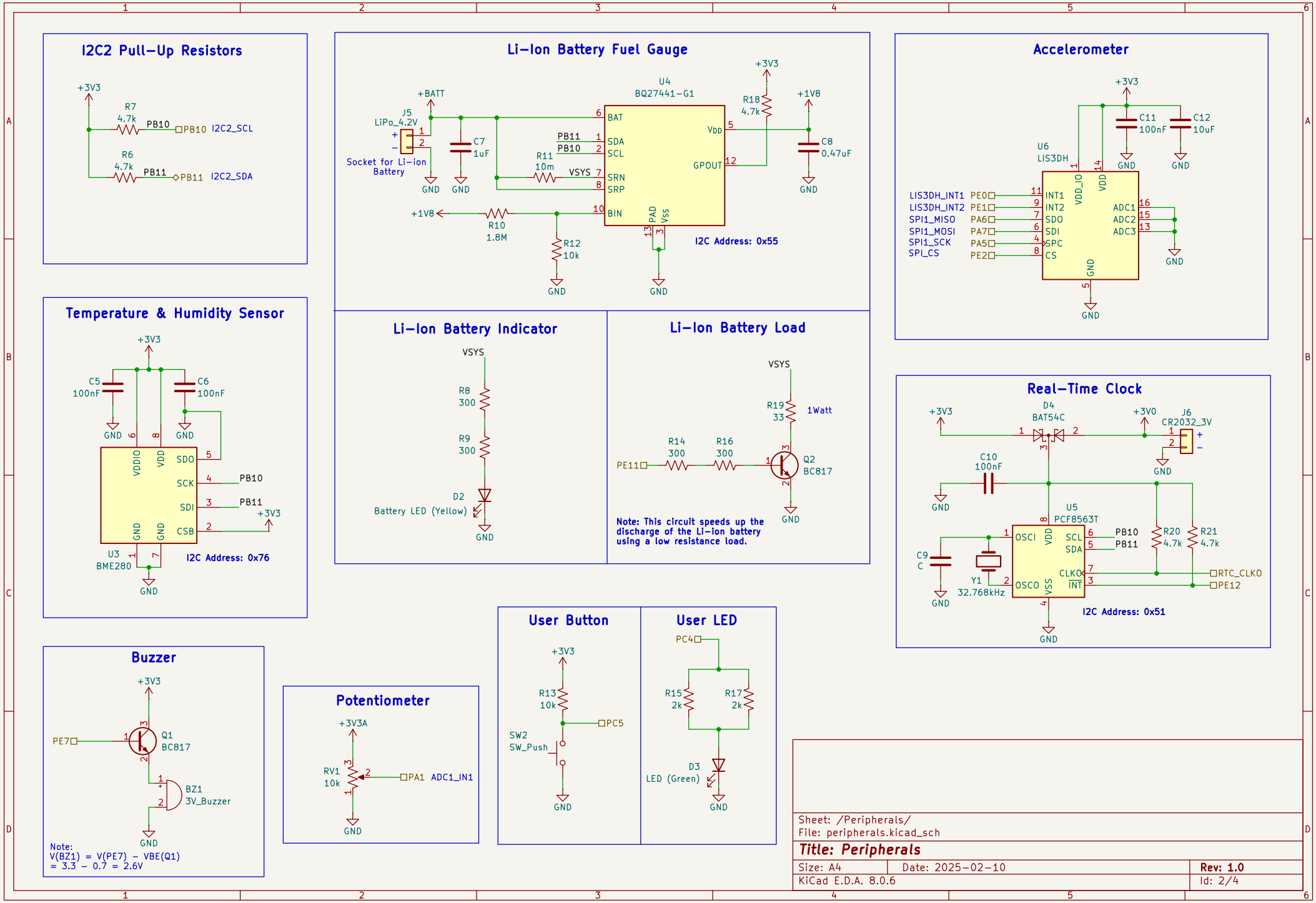

Sheet: /Peripherals/
File: peripherals.kicad_sch

Title: Peripherals

Size: A4	Date: 2025-02-10	Rev: 1.0
KiCad E.D.A. 8.0.6		Id: 2/4

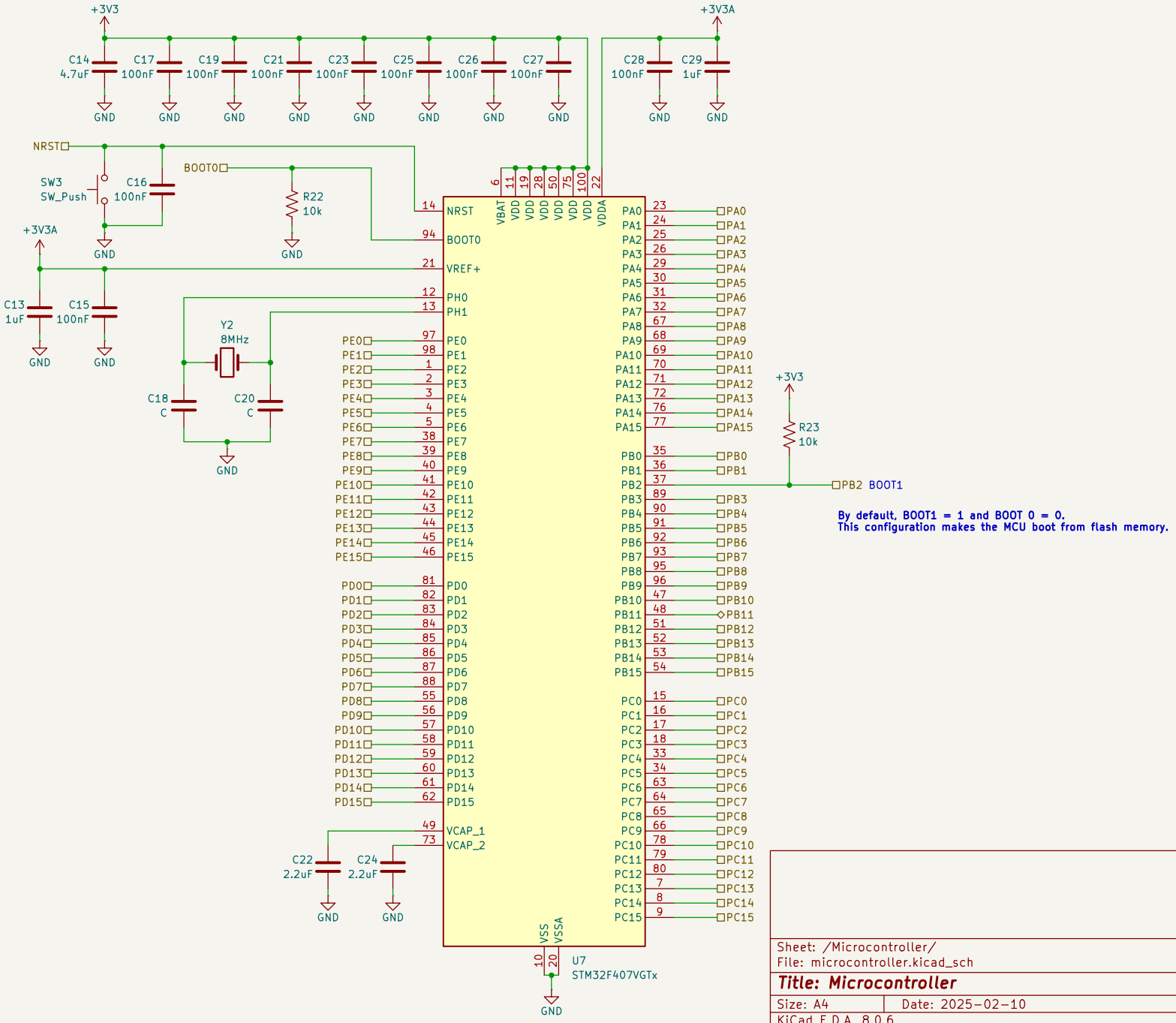

Sheet: /Microcontroller/
File: microcontroller.kicad_sch

Title: Microcontroller

Size: A4	Date: 2025-02-10	Rev: 1.0
KiCad E.D.A. 8.0.6		Id: 3/4

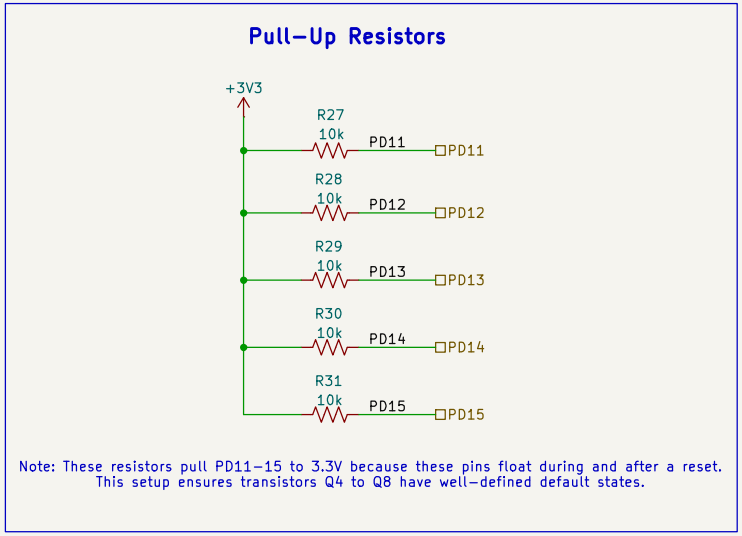

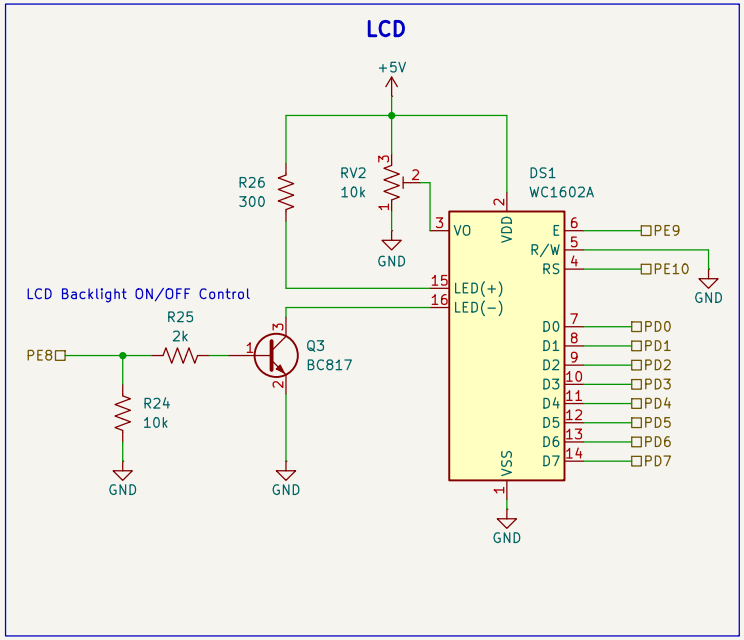

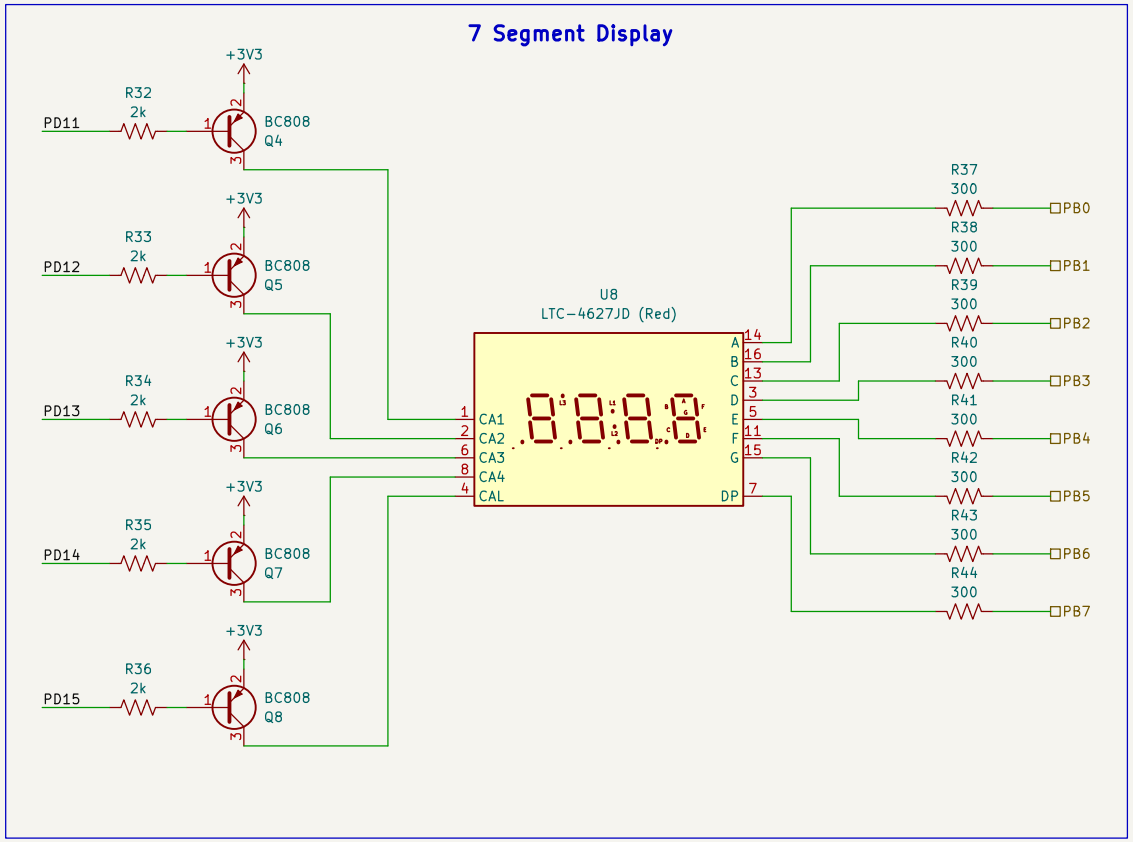

Sheet: /Displays/
File: displays.kicad_sch

Title: Displays

Size: A4	Date: 2025-02-10	**Rev: 1.0**
KiCad E.D.A. 8.0.6		Id: 4/4