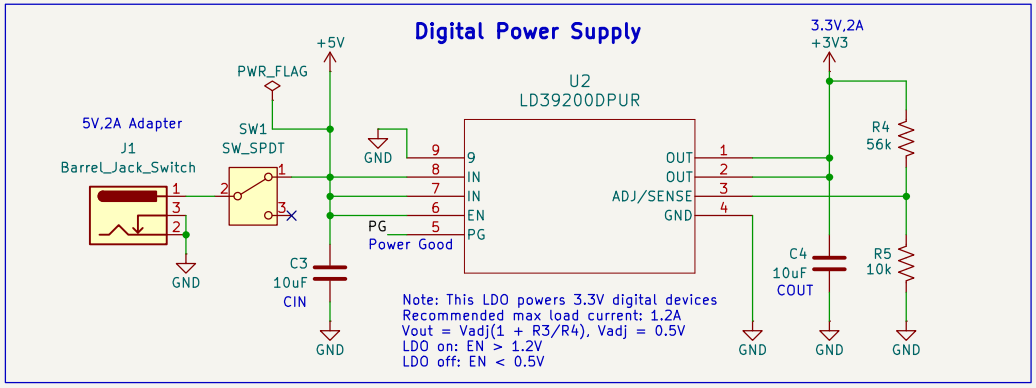

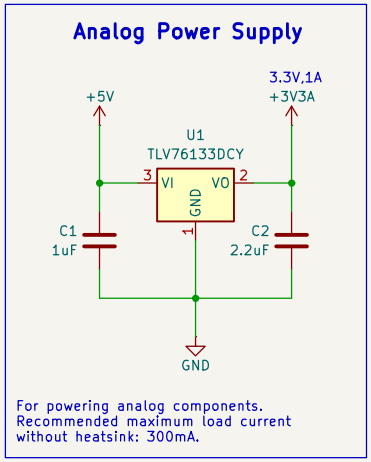

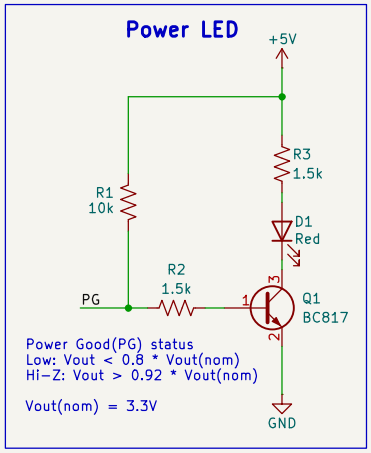

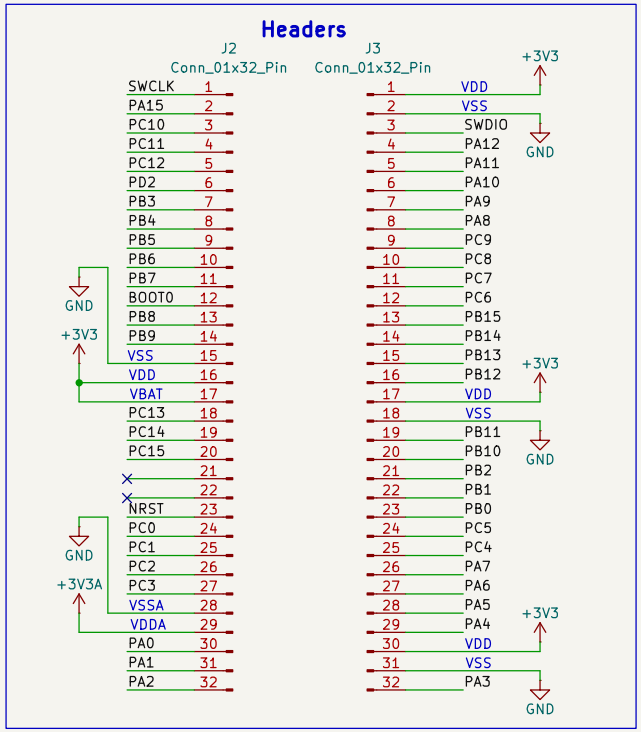

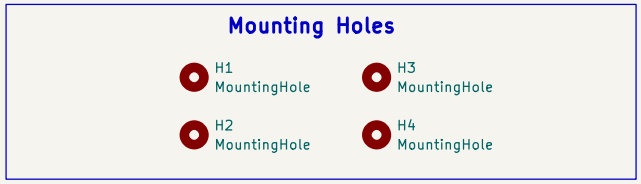

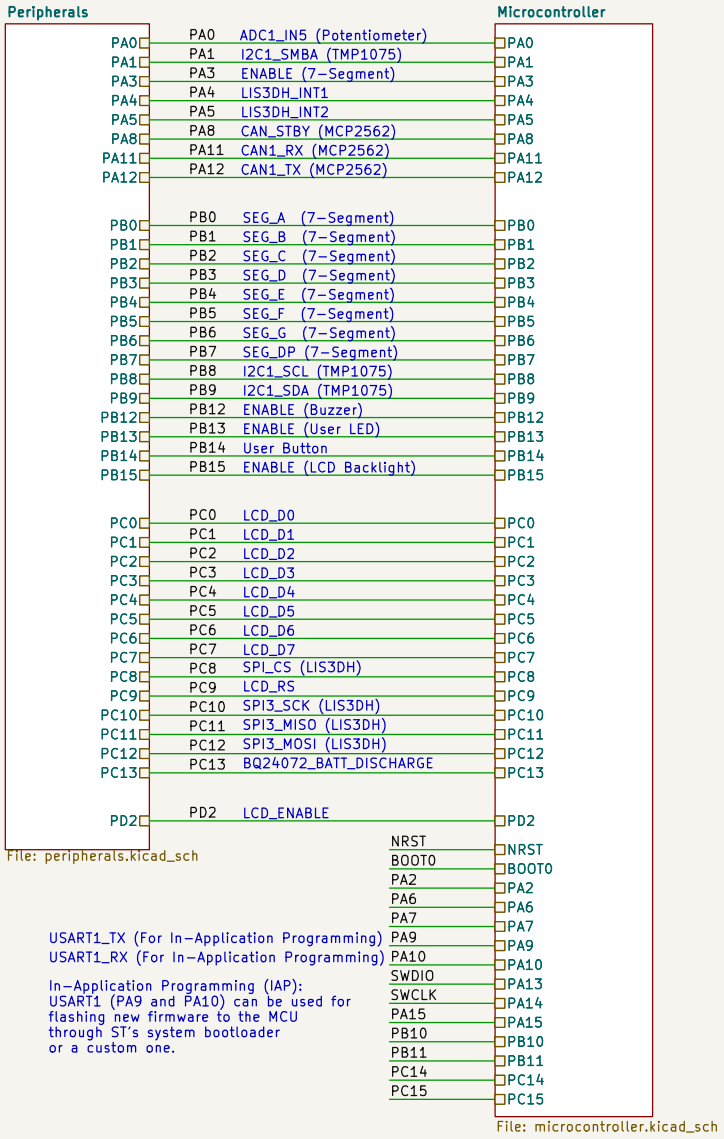

Sheet: /
File: rjx_training_kit.kicad_sch

Title: RJX Embedded Training Kit

Size: A4	Date: 2025-02-10	Rev: 1.0
KiCad E.D.A. 8.0.6		Id: 1/3

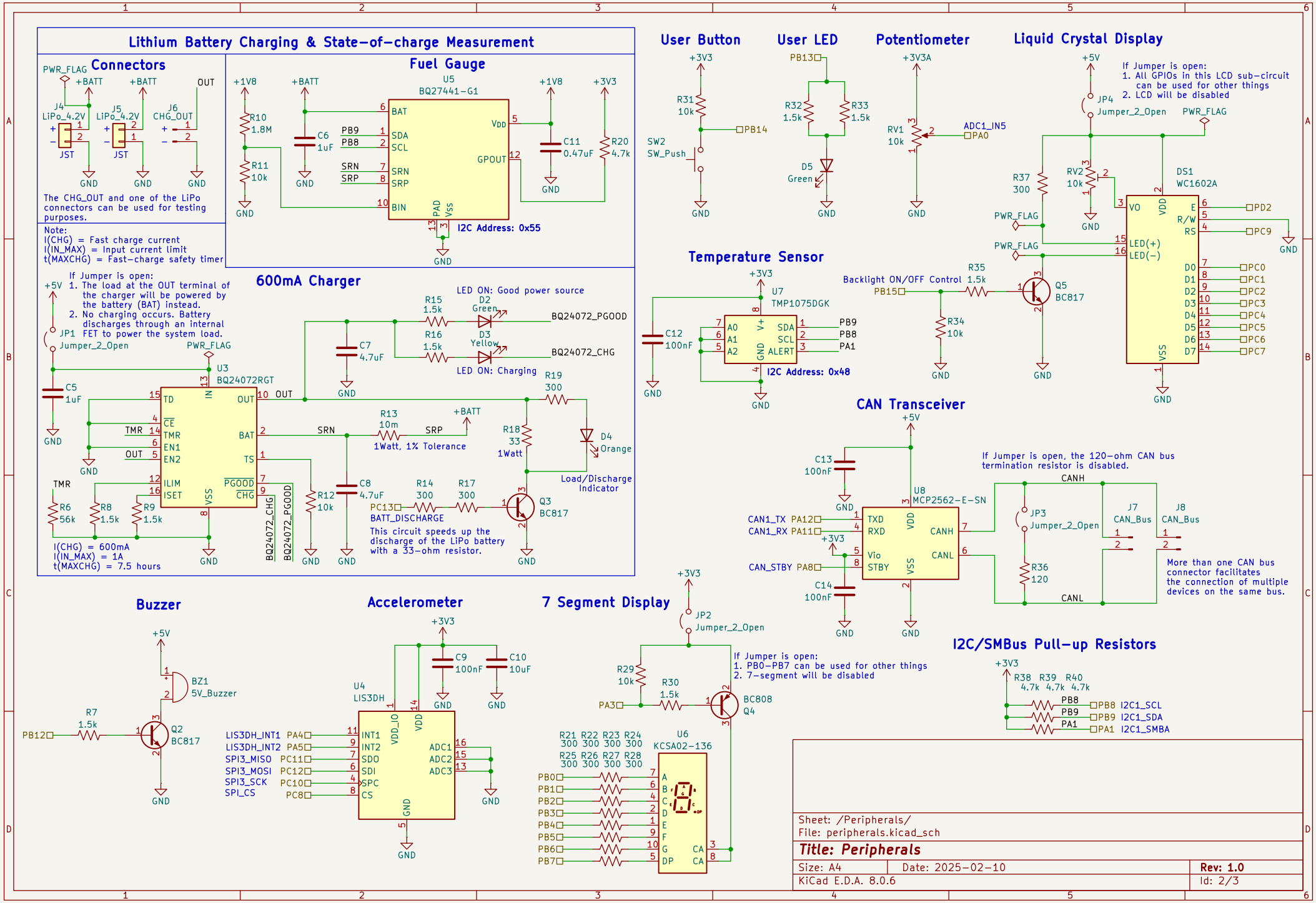
Lithium Battery Charging & State-of-charge Measurement
Connectors
PWR_FLAG
+BATT
OUT
J4
LiPo_4.2V
J5
LiPo_4.2V
J6
CHG_OUT
JST
GND
The CHG_OUT and one of the LiPo connectors can be used for testing purposes.
Fuel Gauge
U5
BQ27441-G1
+1V8
+3V3
R10
1.8M
R11
10k
C6
1uF
PB9
PB8
SDA
SCL
SRN
SRP
BIN
BAT
VDD
GPOUT
PAD
VSS
C11
0.47uF
R20
4.7k
I2C Address: 0x55
Note:
I(CHG) = Fast charge current
I(IN_MAX) = Input current limit
t(MAXCHG) = Fast-charge safety timer
600mA Charger
If Jumper is open:
1. The load at the OUT terminal of the charger will be powered by the battery (BAT) instead.
2. No charging occurs. Battery discharges through an internal FET to power the system load.
JP1
Jumper_2_Open
U3
BQ24072RGT
C5
1uF
TD
CE
TMR
EN1
EN2
ILIM
ISET
IN
OUT
BAT
TS
PGOOD
CHG
VSS
R6
56k
R8
1.5k
R9
1.5k
I(CHG) = 600mA
I(IN_MAX) = 1A
t(MAXCHG) = 7.5 hours
BQ24072_CHG
BQ24072_PGOOD
R12
10k
C7
4.7uF
C8
4.7uF
R13
10m
1Watt, 1% Tolerance
SRN
SRP
R15
1.5k
R16
1.5k
D2
Green
D3
Yellow
LED ON: Good power source
LED ON: Charging
R19
300
D4
Orange
Load/Discharge Indicator
R18
33
1Watt
R14
300
R17
300
PC13
BATT_DISCHARGE
Q3
BC817
This circuit speeds up the discharge of the LiPo battery with a 33-ohm resistor.
User Button
SW2
SW_Push
PB14
User LED
PB13
R32
1.5k
R33
1.5k
D5
Green
Potentiometer
RV1
10k
ADC1_IN5
PA0
Liquid Crystal Display
If Jumper is open:
1. All GPIOs in this LCD sub-circuit can be used for other things
2. LCD will be disabled
JP4
Jumper_2_Open
R37
300
RV2
10k
DS1
WC1602A
VO
VDD
E
R/W
RS
LED(+)
LED(-)
D0
D1
D2
D3
D4
D5
D6
D7
PD2
PC9
PC0
PC1
PC2
PC3
PC4
PC5
PC6
PC7
Backlight ON/OFF Control
PB15
R35
1.5k
R34
10k
Q5
BC817
Temperature Sensor
U7
TMP1075DGK
A0
A1
A2
V+
SDA
SCL
ALERT
C12
100nF
I2C Address: 0x48
CAN Transceiver
U8
MCP2562-E-SN
C13
100nF
C14
100nF
CAN1_TX PA12
CAN1_RX PA11
CAN_STBY PA8
TXD
RXD
Vio
STBY
CANH
CANL
If Jumper is open, the 120-ohm CAN bus termination resistor is disabled.
JP3
Jumper_2_Open
R36
120
J7
CAN_Bus
J8
CAN_Bus
More than one CAN bus connector facilitates the connection of multiple devices on the same bus.
Buzzer
BZ1
5V_Buzzer
R7
1.5k
PB12
Q2
BC817
Accelerometer
U4
LIS3DH
C9
100nF
C10
10uF
LIS3DH_INT1 PA4
LIS3DH_INT2 PA5
SPI3_MISO PC11
SPI3_MOSI PC12
SPI3_SCK PC10
SPI_CS PC8
INT1
INT2
SDO
SDI
SPC
CS
VDD_IO
ADC1
ADC2
ADC3
7 Segment Display
JP2
Jumper_2_Open
If Jumper is open:
1. PB0-PB7 can be used for other things
2. 7-segment will be disabled
R29
10k
R30
1.5k
PA3
BC808
Q4
R21 R22 R23 R24
300 300 300 300
R25 R26 R27 R28
300 300 300 300
U6
KCSA02-136
PB0
PB1
PB2
PB3
PB4
PB5
PB6
PB7
CA
I2C/SMBus Pull-up Resistors
R38 R39 R40
4.7k 4.7k 4.7k
PB8 I2C1_SCL
PB9 I2C1_SDA
PA1 I2C1_SMBA
Sheet: /Peripherals/
File: peripherals.kicad_sch
Title: Peripherals
Size: A4
Date: 2025-02-10
Rev: 1.0
KiCad E.D.A. 8.0.6
Id: 2/3

Microcontroller (MCU)

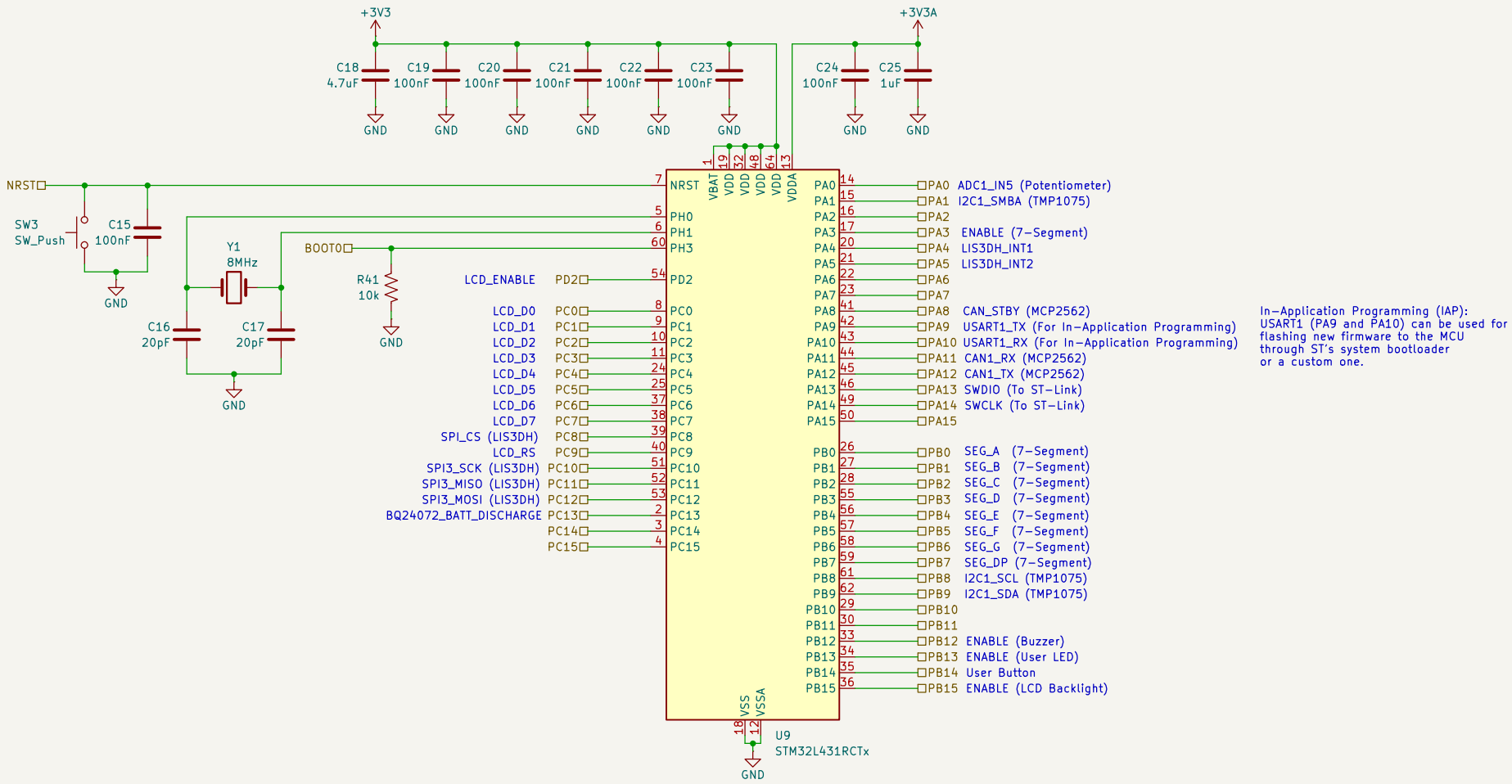

Sheet: /Microcontroller/
File: microcontroller.kicad_sch

Title: Microcontroller

Size: A4	Date: 2025-02-10	**Rev: 1.0**
KiCad E.D.A. 8.0.6		Id: 3/3