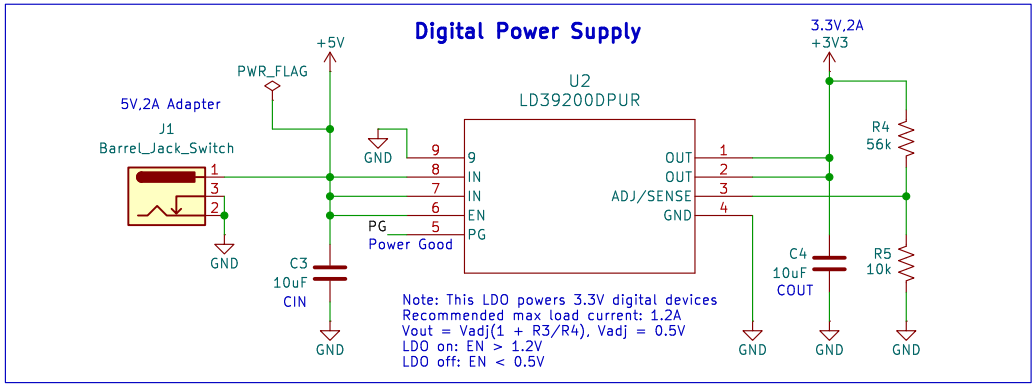

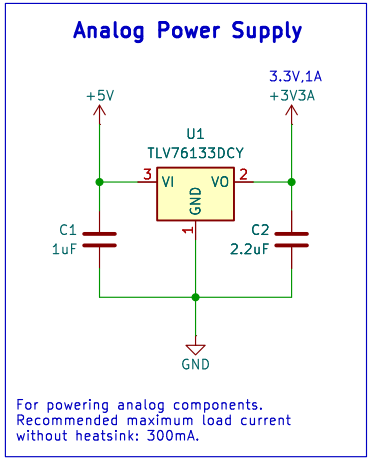

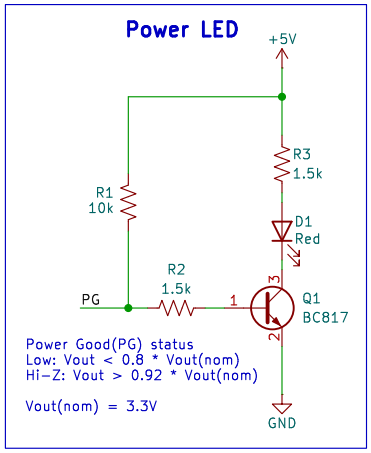

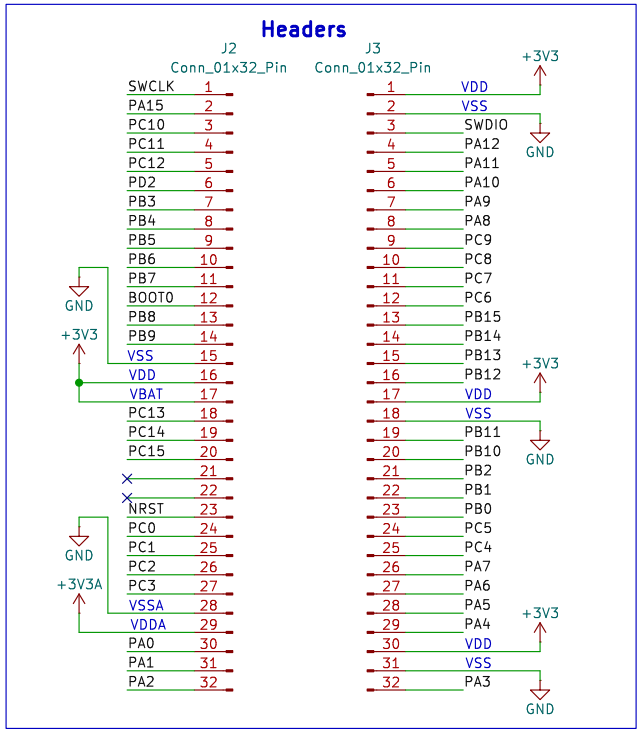

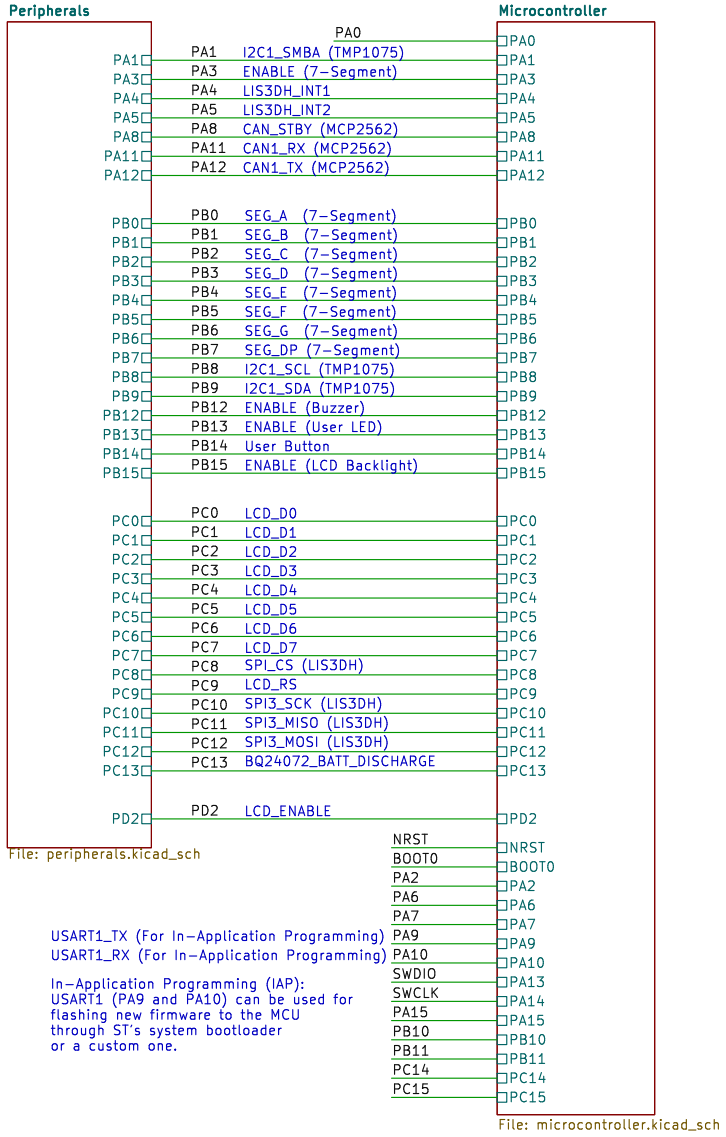

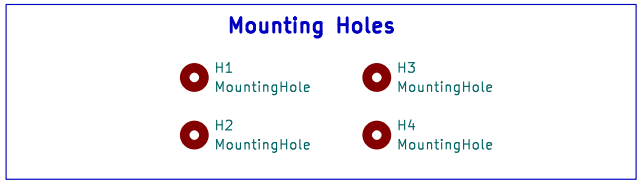

Sheet: /
File: rjx_training_kit.kicad_sch

Title: RJX Embedded Training Kit

Size: A4	Date: 2025-02-10	Rev: 1.0
KiCad E.D.A. 9.0.6		Id: 1/3

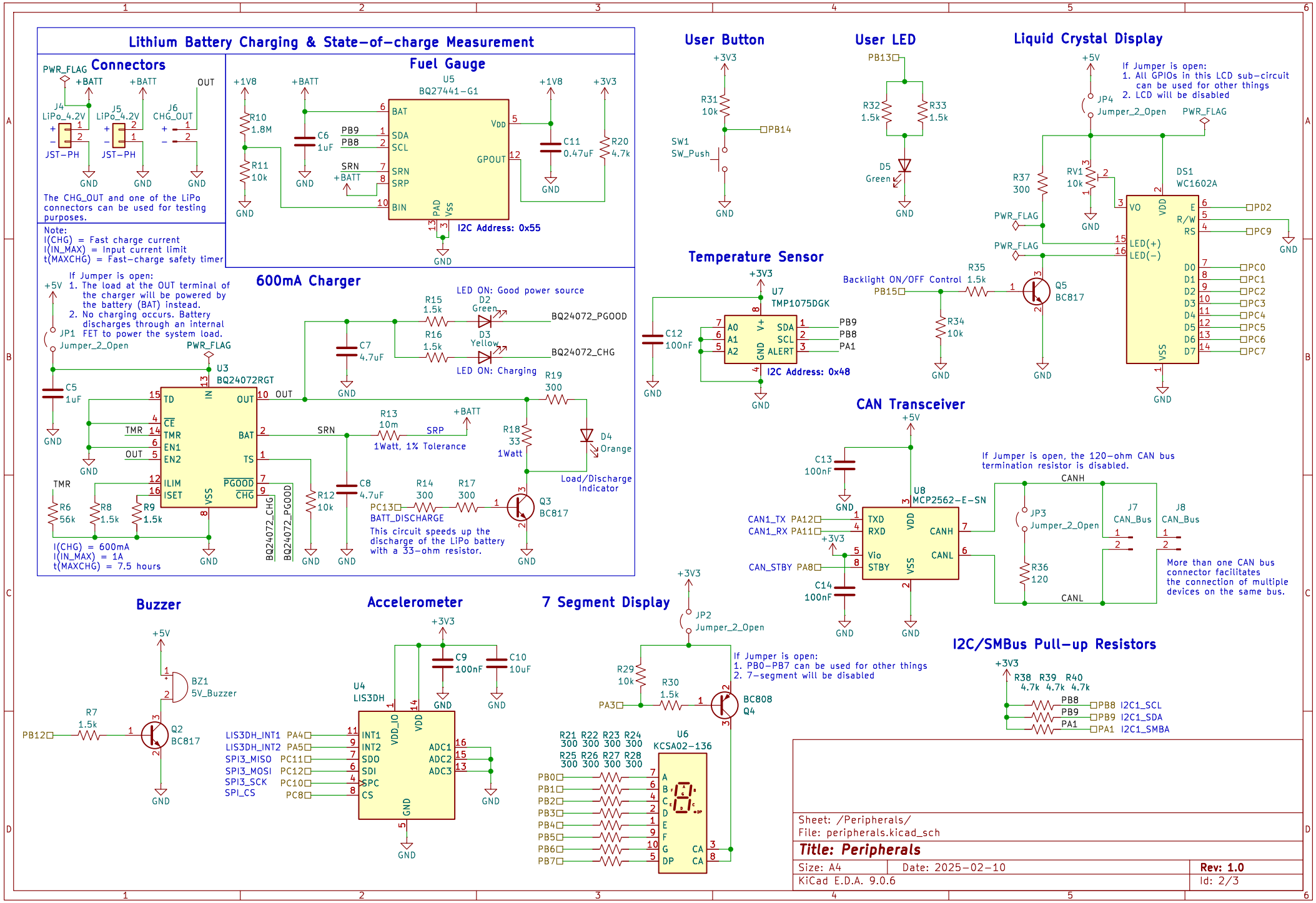
Lithium Battery Charging & State-of-charge Measurement
Connectors
PWR_FLAG
+BATT
OUT
J4 LiPo_4.2V
J5 LiPo_4.2V
J6 CHG_OUT
JST-PH
GND
The CHG_OUT and one of the LiPo connectors can be used for testing purposes.
Fuel Gauge
U5 BQ27441-G1
+1V8
+3V3
R10 1.8M
R11 10k
C6 1uF
PB9
PB8
SRN
BAT
SDA
SCL
SRP
BIN
VDD
GPOUT
PAD
VSS
C11 0.47uF
R20 4.7k
I2C Address: 0x55
Note:
I(CHG) = Fast charge current
I(IN_MAX) = Input current limit
t(MAXCHG) = Fast-charge safety timer
600mA Charger
If Jumper is open:
1. The load at the OUT terminal of the charger will be powered by the battery (BAT) instead.
2. No charging occurs. Battery discharges through an internal FET to power the system load.
JP1 Jumper_2_Open
U3 BQ24072RGT
C5 1uF
TD
CE
TMR
EN1
EN2
ILIM
ISET
IN
OUT
BAT
TS
PGOOD
CHG
VSS
R6 56k
R8 1.5k
R9 1.5k
R12 10k
C7 4.7uF
C8 4.7uF
R13 10m
1Watt, 1% Tolerance
R14 300
R17 300
PC13
BATT_DISCHARGE
Q3 BC817
R15 1.5k
R16 1.5k
D2 Green
D3 Yellow
LED ON: Good power source
LED ON: Charging
BQ24072_PGOOD
BQ24072_CHG
R19 300
R18 33 1Watt
D4 Orange
Load/Discharge Indicator
This circuit speeds up the discharge of the LiPo battery with a 33-ohm resistor.
I(CHG) = 600mA
I(IN_MAX) = 1A
t(MAXCHG) = 7.5 hours
User Button
PB14
R31 10k
SW1 SW_Push
User LED
PB13
R32 1.5k
R33 1.5k
D5 Green
Temperature Sensor
U7 TMP1075DGK
A0
A1
A2
SDA
SCL
ALERT
C12 100nF
I2C Address: 0x48
Liquid Crystal Display
If Jumper is open:
1. All GPIOs in this LCD sub-circuit can be used for other things
2. LCD will be disabled
JP4 Jumper_2_Open
DS1 WC1602A
R37 300
RV1 10k
VO
VDD
E
R/W
RS
LED(+)
LED(-)
D0
D1
D2
D3
D4
D5
D6
D7
PD2
PC9
PC0
PC1
PC2
PC3
PC4
PC5
PC6
PC7
Backlight ON/OFF Control
PB15
R35 1.5k
R34 10k
Q5 BC817
CAN Transceiver
U8 MCP2562-E-SN
C13 100nF
C14 100nF
CAN1_TX PA12
CAN1_RX PA11
CAN_STBY PA8
TXD
RXD
Vio
STBY
CANH
CANL
If Jumper is open, the 120-ohm CAN bus termination resistor is disabled.
JP3 Jumper_2_Open
R36 120
J7 CAN_Bus
J8 CAN_Bus
More than one CAN bus connector facilitates the connection of multiple devices on the same bus.
Buzzer
BZ1 5V_Buzzer
R7 1.5k
PB12
Q2 BC817
Accelerometer
U4 LIS3DH
C9 100nF
C10 10uF
LIS3DH_INT1 PA4
LIS3DH_INT2 PA5
SPI3_MISO PC11
SPI3_MOSI PC12
SPI3_SCK PC10
SPI_CS PC8
INT1
INT2
SDO
SDI
SPC
CS
VDD_IO
ADC1
ADC2
ADC3
7 Segment Display
JP2 Jumper_2_Open
If Jumper is open:
1. PB0-PB7 can be used for other things
2. 7-segment will be disabled
R29 10k
R30 1.5k
PA3
BC808 Q4
U6 KCSA02-136
R21 R22 R23 R24 300 300 300 300
R25 R26 R27 R28 300 300 300 300
PB0
PB1
PB2
PB3
PB4
PB5
PB6
PB7
CA
I2C/SMBus Pull-up Resistors
R38 R39 R40 4.7k 4.7k 4.7k
PB8 I2C1_SCL
PB9 I2C1_SDA
PA1 I2C1_SMBA
Sheet: /Peripherals/
File: peripherals.kicad_sch
Title: Peripherals
Size: A4
Date: 2025-02-10
Rev: 1.0
KiCad E.D.A. 9.0.6
Id: 2/3

Microcontroller (MCU)

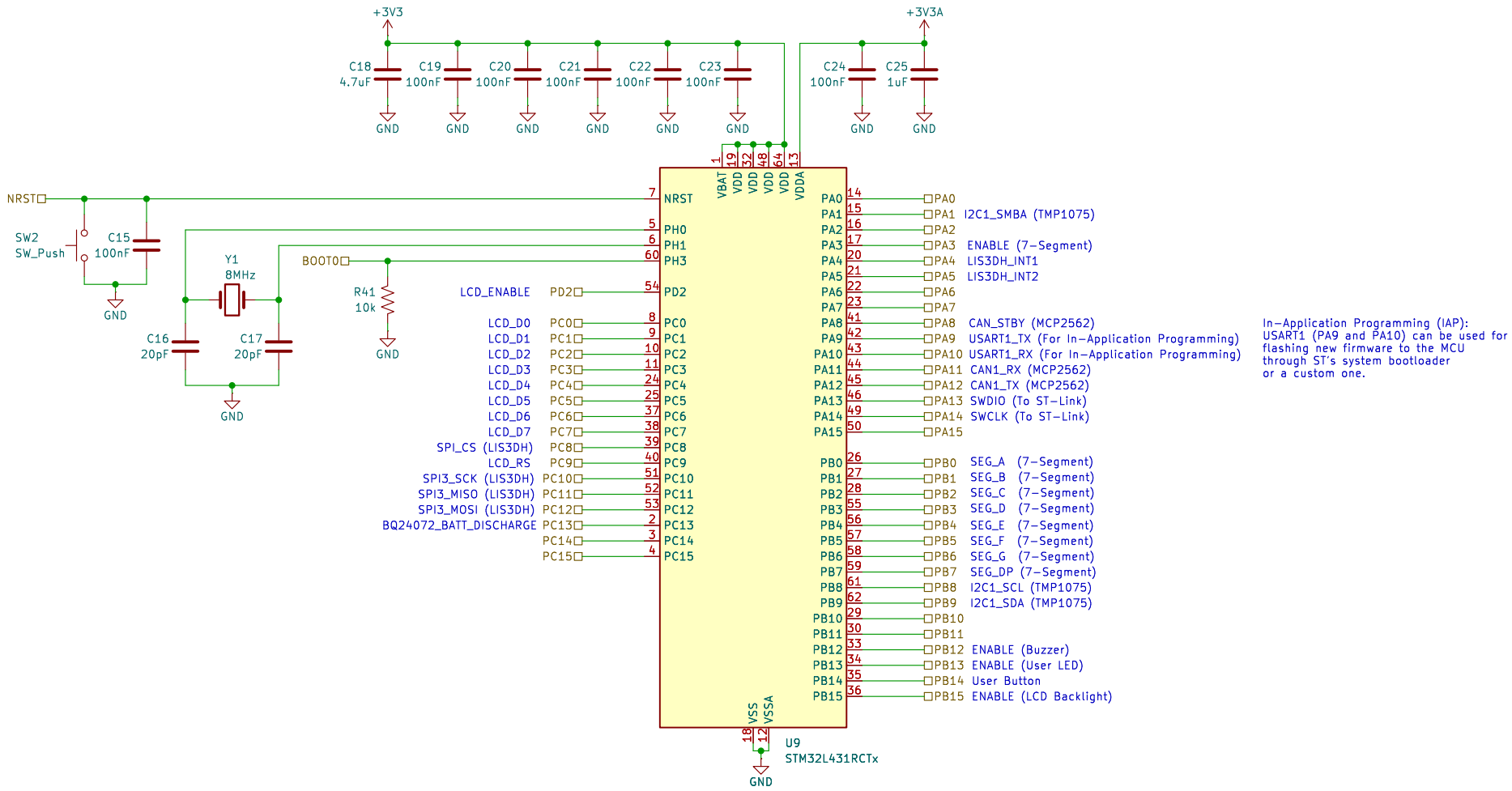

Sheet: /Microcontroller/
File: microcontroller.kicad_sch

Title: Microcontroller

Size: A4	Date: 2025-02-10	**Rev: 1.0**
KiCad E.D.A. 9.0.6		Id: 3/3