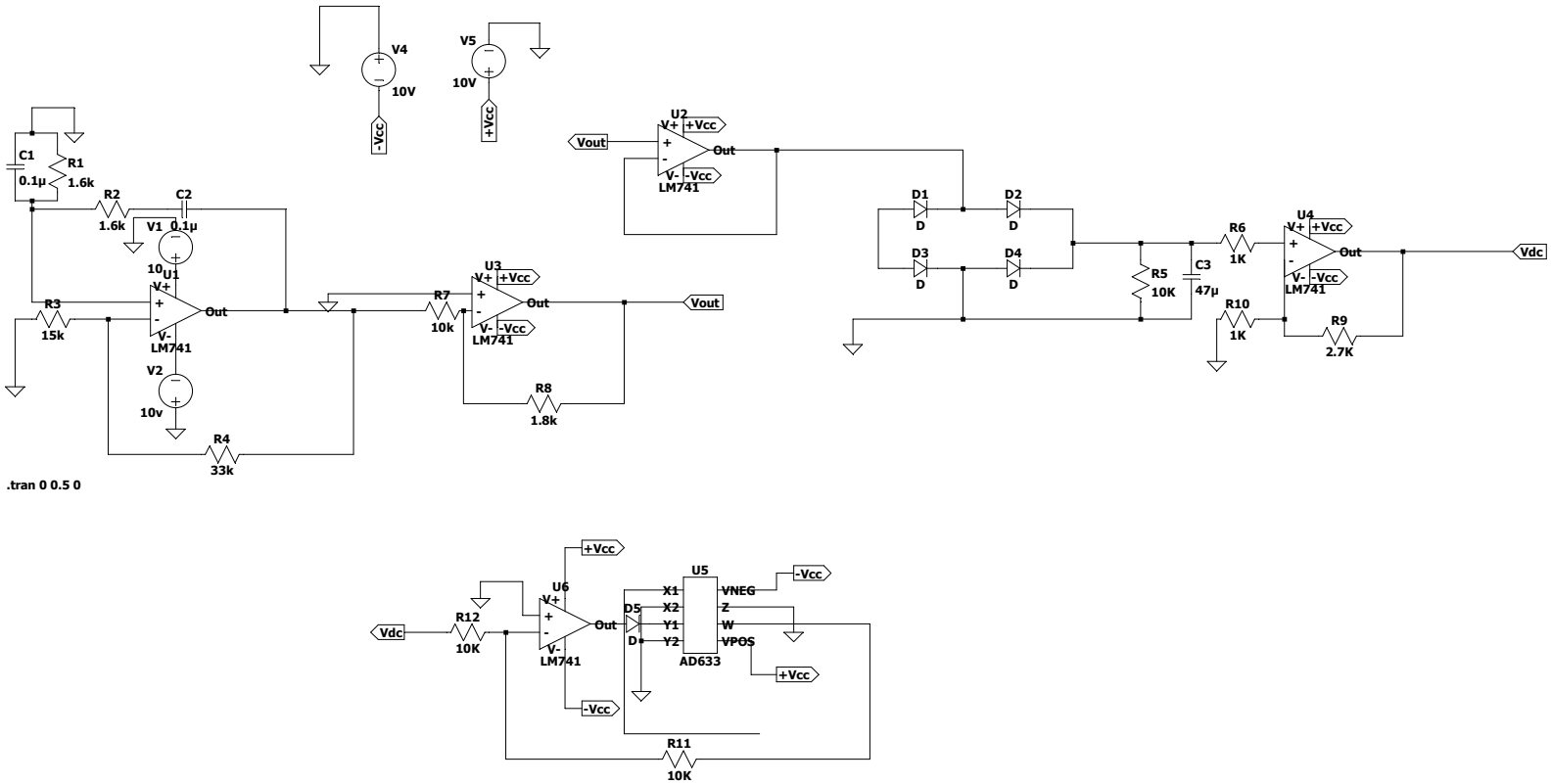

--- C:\Users\hp\OneDrive\Desktop\LT_spice_exp\task3.asc ---