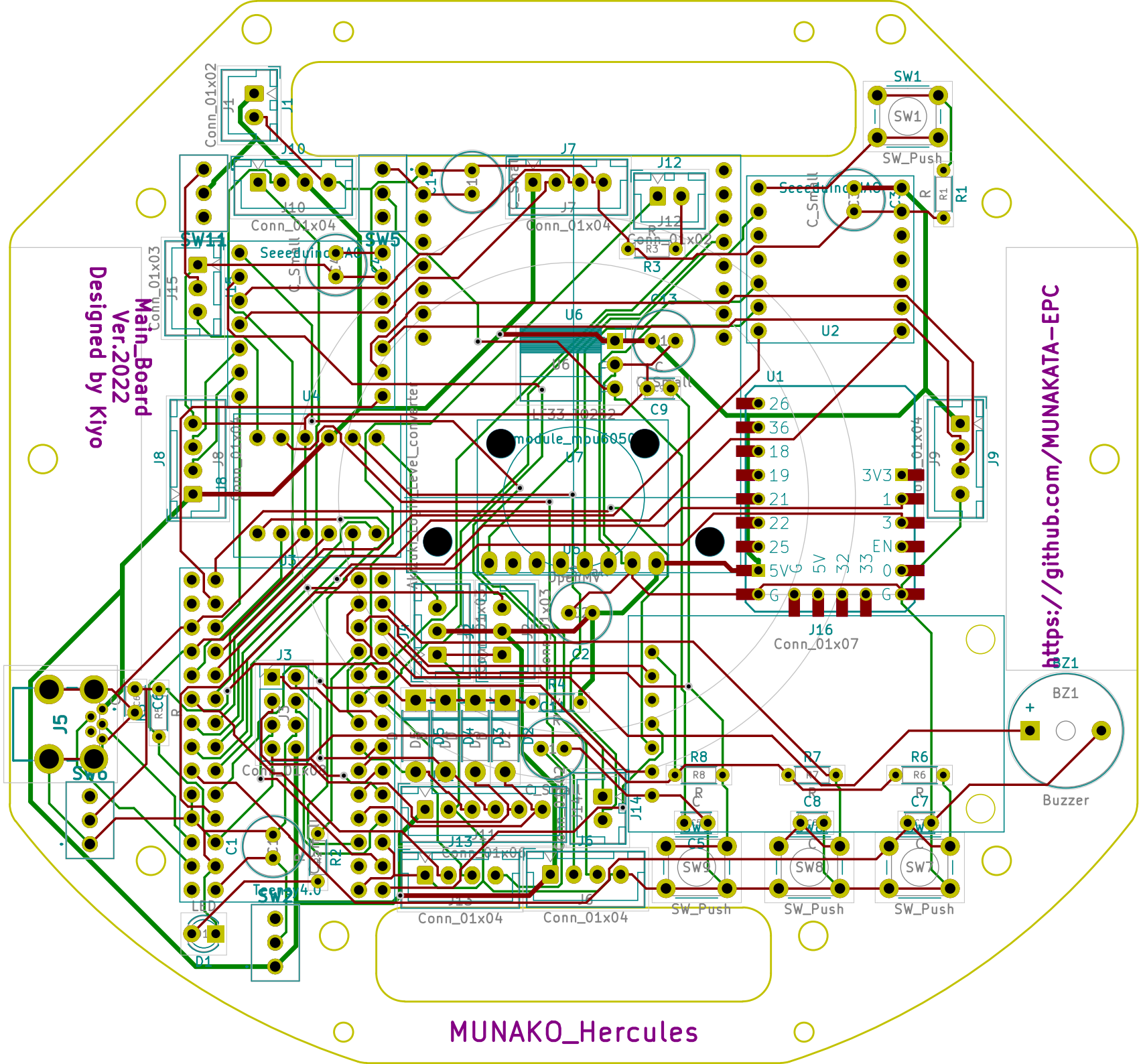
Main_Board
Ver.2022
Designed by Kiyo
https://github.com/MUNAKATA-EPC
MUNAKO_Hercules
SW1
SW_Push
SW11
SW5
SW9
SW8
SW7
SW6
SW2
J1
Conn_01x02
J10
Conn_01x04
J7
J12
Conn_01x02
J15
Conn_01x03
J8
J9
J3
J5
J13
J6
J14
J16
Conn_01x07
U1
U2
U4
U6
U7
U5
C9
C13
C2
C1
C5
C8
C7
R1
R3
R8
R7
R6
BZ1
Buzzer
D1
LED
Teensy4.0
module_mou6050
26
36
18
19
21
22
25
5VG
3V3
1
3
EN
0
G
5V
32
33