MULTIMEDIA UNIVERSITY

MMU&IC Society

Multimedia University Philharmonic Orchestra

MUPO Concert

MULTIMEDIA UNIVERSITY PHILHARMONIC ORCHESTRA

SPONSORSHIP PROSPECTUS

Multimedia University Philharmonic Orchestra

https://www.instagram.com/mupommu/?hl=en

https://www.facebook.com/mupommu/

mupo.mmu@gmail.com

Life Made Easier™ TM Group

ABOUT US

Multimedia University Philharmonic Orchestra (MUPO)

Multimedia University Philharmonic Orchestra (MUPO) is a new established division in Multimedia University Melaka Campus. The team which consists of brass, woodwinds, strings and percussion players was officially established in 2019. Throughout the year, the team had successfully organized a few events such as Violin Workshop, Music Trip and more. The team has also participated in events from other faculty as performers. During Movement Control Order (MCO) in March 2020, the team also organized the Stay At Home Collab which encourage musicians from all over the country to participate.

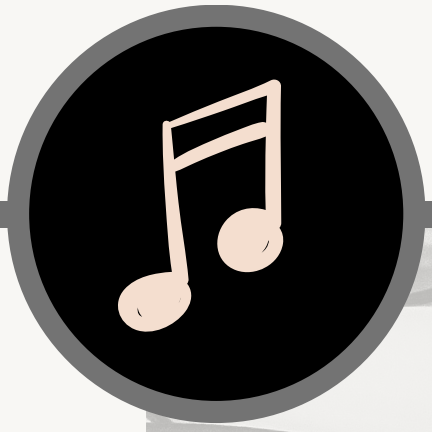

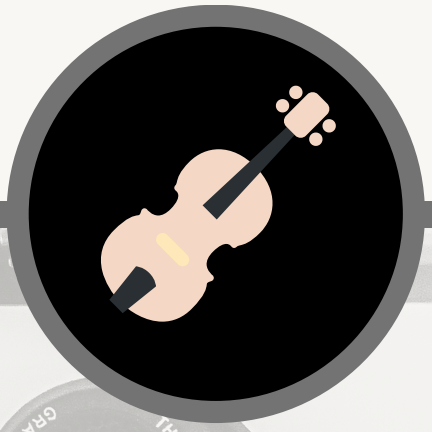

Our Objectives

- To bring the orchestral atmosphere to MMU students and Melaccans.
- To provide oppurtunity for both MUPO and Triplet's member to perform and gain experience through the concert.
- To motivate students to be confident in performing music on stage.

Annual Events

MUSIC TRIP

The team has organized a Music Trip to Kuala Lumpur in January 2020. The participants visited the KL Art Gallery and had a fruitful exchange session with the Triplets Orchestra.

VIOLIN WORKSHOP

The team has organized Violin Workshop in Semester 1 & 2, 2019/2020. The trainers conducted both theory and practical teaching during the workshop. A total of 50 participants have joined us for the workshop.

Annual Events

STAY AT HOME COLLAB

The team has organized an series of online collaborations with musicians all over the country to encourage musicians to practice at home during the Covid-19 pandemic. The event had received massive support from the public.

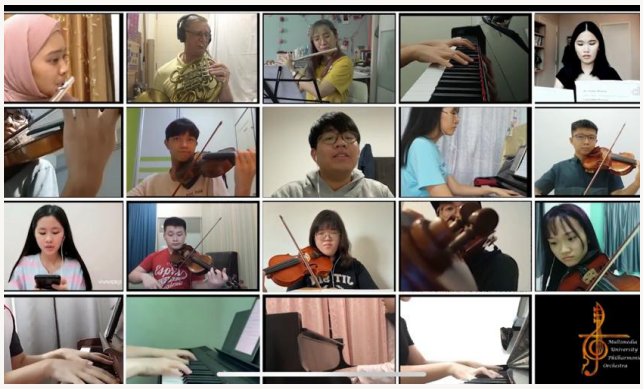

EVENT PERFORMANCES

The team had participated in event performances in all faculties such as the Law Got Talent. The team has also been approached by other societies to perform during their event.

MUPO Concert

Overview

The MUPO Concert 2021 is initiated by the Multimedia University Philharmonic Orchestra (MUPO) division of the MMUSIC Society. This concert is a great opportunity to bring benefits to the students in MMU and also MMU as a whole by achieving the major objectives. We hope that the following concert would be able to provide the campus with a better exposure to the western musical environment and fundamental knowledge in music. This also provides a channel for the students to express their talents through this event.

The Multimedia University MMUSIC Society MUPO Division, as the organizer, collaborating with Triplets Orchestra, plans to organize the concert with the aim of bringing music and orchestra into the university's atmosphere by forming an expanding musical community. This is because we can see in several universities in Kuala Lumpur like Sunway University has established orchestras and concerts that benefits the student and the university itself. The students will get a chance to show their talent and to build up a professional domain in the music field.

In addition, this will expose students, lecturers and staffs of MMU to a different type of world-recognized event. This is because in the past history of MMU, this is the first ever western concert to be held. We believe by having this concert, the MMU community will encounter the spirit of western orchestral music and be involved in the upcoming plans.

MUPO Concert

Program Tentative

Date	4th September 2021
Time	7.30pm – 10.00pm
Venue	Dewan Tun Canselor, MMU Cyberjaya
Performers	90 pax
Audience	600 pax

Collaborator

Triplet Orchestra

Triplets Orchestra is a collaborative orchestra consisting three different university students from Taylor's University, Sunway University and Monash University in Kuala Lumpur. They were founded in Year 2017 and had achieved success in short 2-3 years' time by having several concert tours. Triplets Orchestra is the biggest orchestra among universities in Malaysia which contains more than 100 professional student players in the team. They perform both Classical and Modern pop orchestra pieces. Mr. Chan Ling Chee, the conductor of the Triplets Orchestra is also one of the most famous conductor and coach in Malaysia which leads the Selangor Philharmonic Orchestra and have been serving in his music career over 20 years.

MUPO Concert

Sponsorships General Benefit

Online exposure

- Special Acknowledgement in all MUPO media
- Logo recognition in posters publication
- Certificate of Recognition

Offline exposure

- The organization logo will be featured on all MUPO Concert materials which includes, but is not limited to our booklet, posters, banners, registration form, logo in email signature, certificate & backdrop
- In-campus product sampling

MUPO Concert

Sponsorships Package

	SPONSOR BENEFITS	RM 5000	RM3000	RM1000	RM500	RM 300
		Diamond	Platinum	Gold	Silver	Bronze
Promotional Recognition	Sponsorship Greeting in Event Program Booklet	x	x	x	x	x
	Advertisement on Social Media (Include Shop Name, Logo, Pictures, Address, Link and description)	x	x			
	Advertisement on Social Media (Include Shop Name, Logo, Address, Link)			x	x	
	Advertisement Space in Event Program Booklet (Sizes depending on Packages)	x	x	x		
	Logo Recognition on Banners and Buntings	x	x			
	Logo Recognition and Link on Social Media Logo Recognition on Sponsor Page (Program Booklet)	x	x	x		
	Logo Recognition on Sponsor Thank You Page on Social Media (Post-Event)	x	x	x	x	x
	Right to have a Product Sampling	x				
Event Day Recognition	Logo Recognition on Backdrops	x	x			
	Logo Recognition on Performers/Committee Certificate	x				
	Participation in Ribbon-cutting Ceremony	x				
	Verbal and/ or written Recognition during the Event's Opening and Closing Ceremony	x	x	x		
	Logo Recognition on Sponsors Thank You Slides	x	x	x	x	x
	Right to Distribute Pre-Approved Sampling Products/ Organization's Promotional Items	x	x			
	Entitled to have an Individual Sponsor Bunting	x				
	Logo Recognition on Sponsors Bunting		x			
	Free 2 VIP tickets	x	x			
	Certificate of Recognition	x	x	x	x	x

*Values and Numbers are subject to change and are at the discretion of the organising committee

** Other sponsorship ideas:

Recycle Bag Stationeries Breakfast Refreshment/Break Vouchers Goodies Food Drinks

Sponsorships Package

BRONZE SPONSOR (RM 300)

Promotional Recognition:

- Sponsorship Greeting in Event Program Booklet
- Logo recognition on Sponsor Thank You Page on social media after the event

Event day Recognition:

- Logo recognition to be included on Sponsor Thank You slide during opening and closing ceremony
- Certificate of Recognition will be given to express our sincere gratitude towards the sponsorship

SILVER SPONSOR (RM 500)

Promotional Recognition

- Sponsorship Greeting in Event Program Booklet
- Advertisement on Social Media in the form of album, inclusive of Shop Name, Address, Link and logo (together with all the other sponsors)
- Logo recognition on Sponsor Thank You Page on social media after the event

Event day Recognition

- Logo recognition to be included on Sponsor Thank You slide during opening and closing ceremony
- Certificate of Recognition will be given to express our sincere gratitude towards the sponsorship

Sponsorships Package

GOLD SPONSOR (RM 1000)

Promotional Recognition

- Sponsorship Greeting in Event Program Booklet
- Advertisement on Social Media in the form of album, inclusive of Shop Name, Address, Link and logo (together with all the other sponsors)
- Logo recognition on Sponsor Page of Event Program Booklet
- Logo recognition on Sponsor Thank You Page on social media after the event
- Advertisement space in Program Booklet (half of A5)

Size:

Event day Recognition

- Logo recognition on Sponsor Thank You slide
- Verbal and/ or written Recognition during the Event Opening and Closing Ceremony
- Certificate of Recognition will be given to express our sincere gratitude towards the sponsorship

Sponsorships Package

PLATINUM SPONSOR (RM 3000)

Promotional Recognition

- Sponsorship Greeting in Event Program Booklet
- Advertisement on Social Media in the form of album, inclusive of Shop Name, Logo, Pictures, Address, Link and description (Individual Post, may include organization commercial video with the length of maximum 3.5 minutes)
- Logo recognition on Banners and Bunting
- Logo recognition on Sponsor Page of Event Program Booklet
- Logo recognition on Sponsor Thank You Page on social media after the event
- Advertisement space in Program Booklet (A5 size)

Size:

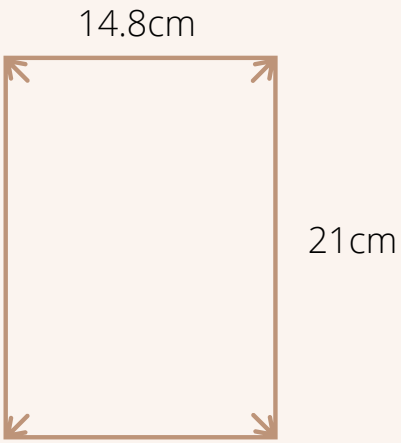

Event day Recognition

- Logo recognition on backdrop
- Logo recognition on Sponsor Thank You slide
- Logo Recognition on Sponsors Bunting
- Free 2 VIP Tickets
- Verbal and/ or written Recognition during the Event Opening and Closing Ceremony
- Certificate of Recognition will be given to express our sincere gratitude towards the sponsorship
- Right to have product sampling (Sponsor is allowed to give out sampling products in MMU Campus during the event day.)

Sponsorships Package

DIAMOND SPONSOR (RM 5000)

Promotional Recognition

- Sponsorship Greeting in Event Program Booklet
- Advertisement on Social Media in the form of album, inclusive of Shop Name, Logo, Pictures, Address, Link and description (Individual Post, may include organization commercial video with the length of maximum 3.5 minutes)
- Logo recognition on Banners and Bunting
- Logo recognition on Sponsor Page of Event Program Booklet
- Logo recognition on Sponsor Thank You Page on social media after the event
- Right to have product sampling (Sponsor is allowed to give out sampling products in MMU Campus before the event day.)
- Advertisement space in Program Booklet (A5 size)

Size:

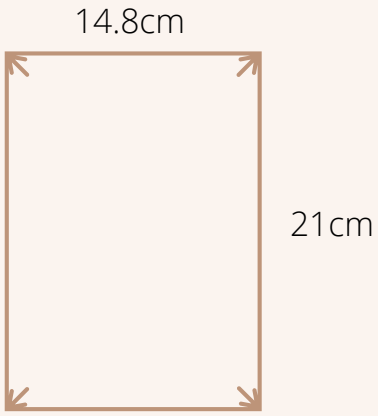

Event day Recognition

- Logo recognition on backdrop
- Logo recognition on Sponsor Thank You slide
- Logo Recognition on Performers' /Committees' Certificate
- Free 2 VIP Tickets
- Participation in Ribbon-cutting Ceremony
- Entitled to have an Individual Sponsor Bunting
- Verbal and/ or written Recognition during the Event Opening and Closing Ceremony
- Certificate of Recognition will be given to express our sincere gratitude towards the sponsorship
- Right to have product sampling (Sponsor is allowed to give out sampling products in MMU Campus during the event day.)