Schematic: Expansion Accessory

SHEET	SHEET NAME
01	Title/Revision History
02	System Block Diagram
03	Power Tree Diagram
04	PMIC
05	VIC Power
06	VIC DDR Ctrl
07	VIC ChipLink & CM
08	VIC LCD & GMII & GPIOs
09	VIC HighIF & Ctrl Other
10	LPDDR (A)
11	LPDDR (B)
12	Type C,uSD, QSIP Flash
13	USB 3.0 HUB
14	2 x USB TYPE A (A)
15	2 x USB TYPE A (B)
16	2 x CSI CONN
17	DSI, AUDIO JACK
18	HDMI FRAMER
19	WiFi, Bluetooth
20	10/100/1000 ETHERNET
21	RPI EXP CONN, LED, BUTTON
22	Power-DC IN

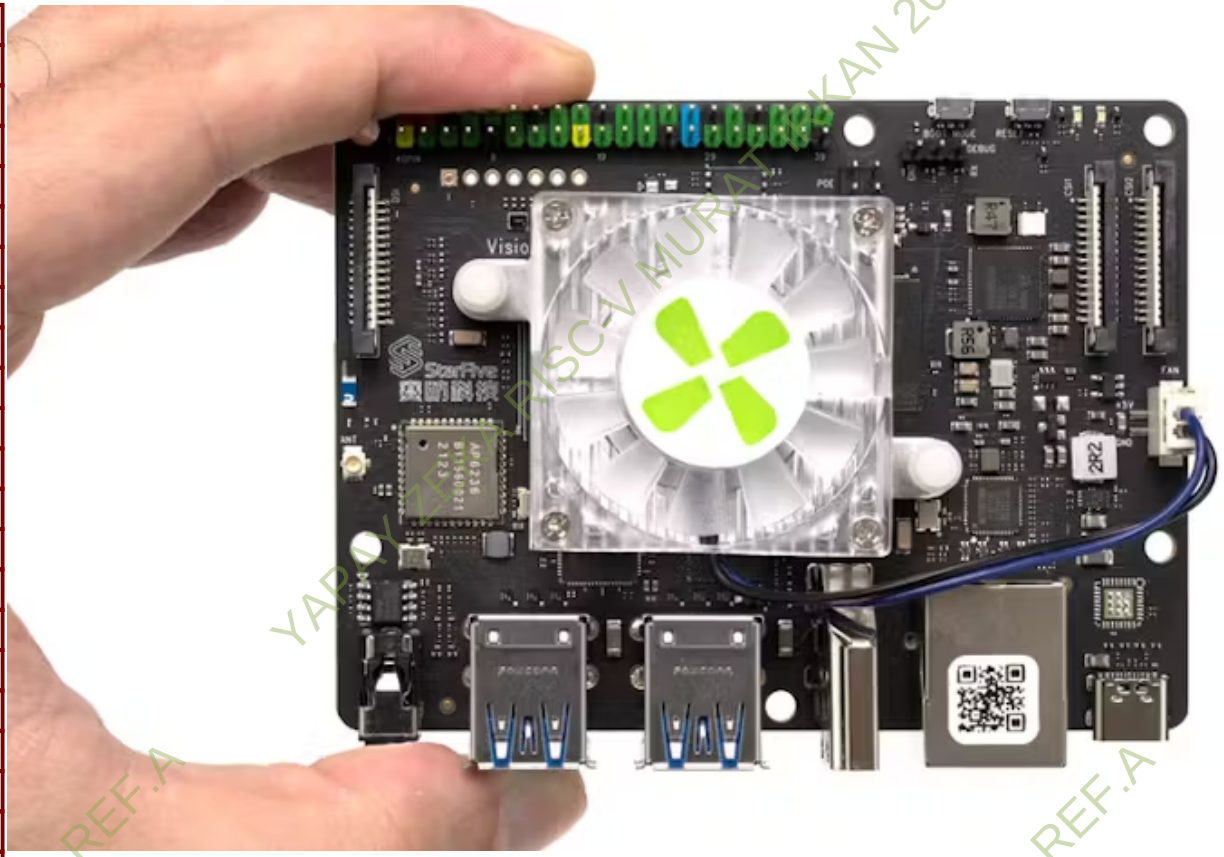

YAPAY ZEKA RISC-V MURAT IRKAN 2025/03 REF.A

StarFive		
Size: A3	Title: VisionFive v1	REV: V1.0
	Document Number: Title/Revision History	
Date: Saturday, January 22, 2022	Sheet 1 of 22	

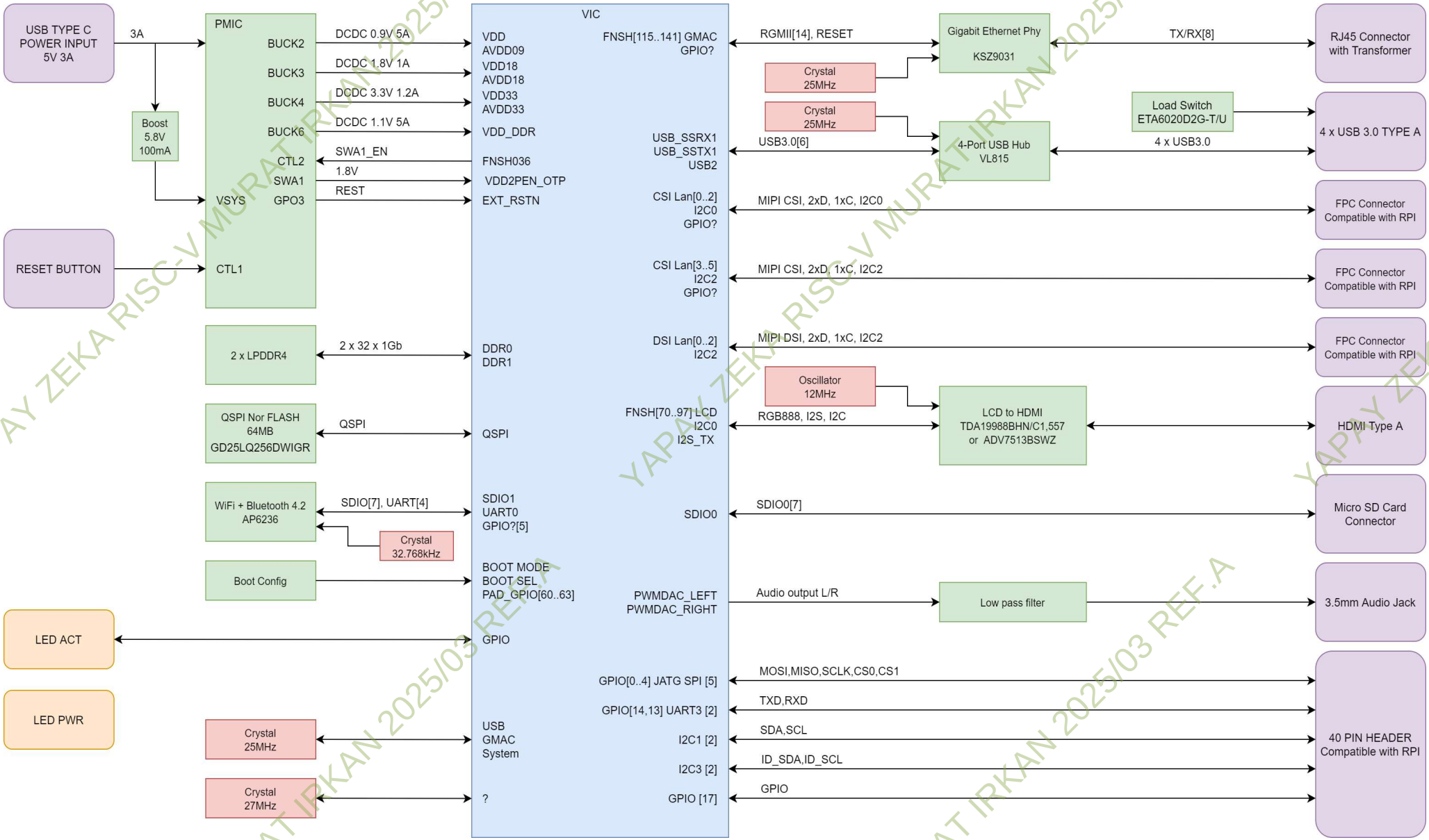

YAPAY ZEKA RISC-V MURAT IRKAN 2025/03 REF.A

StarFive		
Size: A3	Title: VisionFive v1	REV: V1.0
	Document Number: System Block Diagram	
Date: Saturday, January 22, 2022	Sheet 2 of 22	

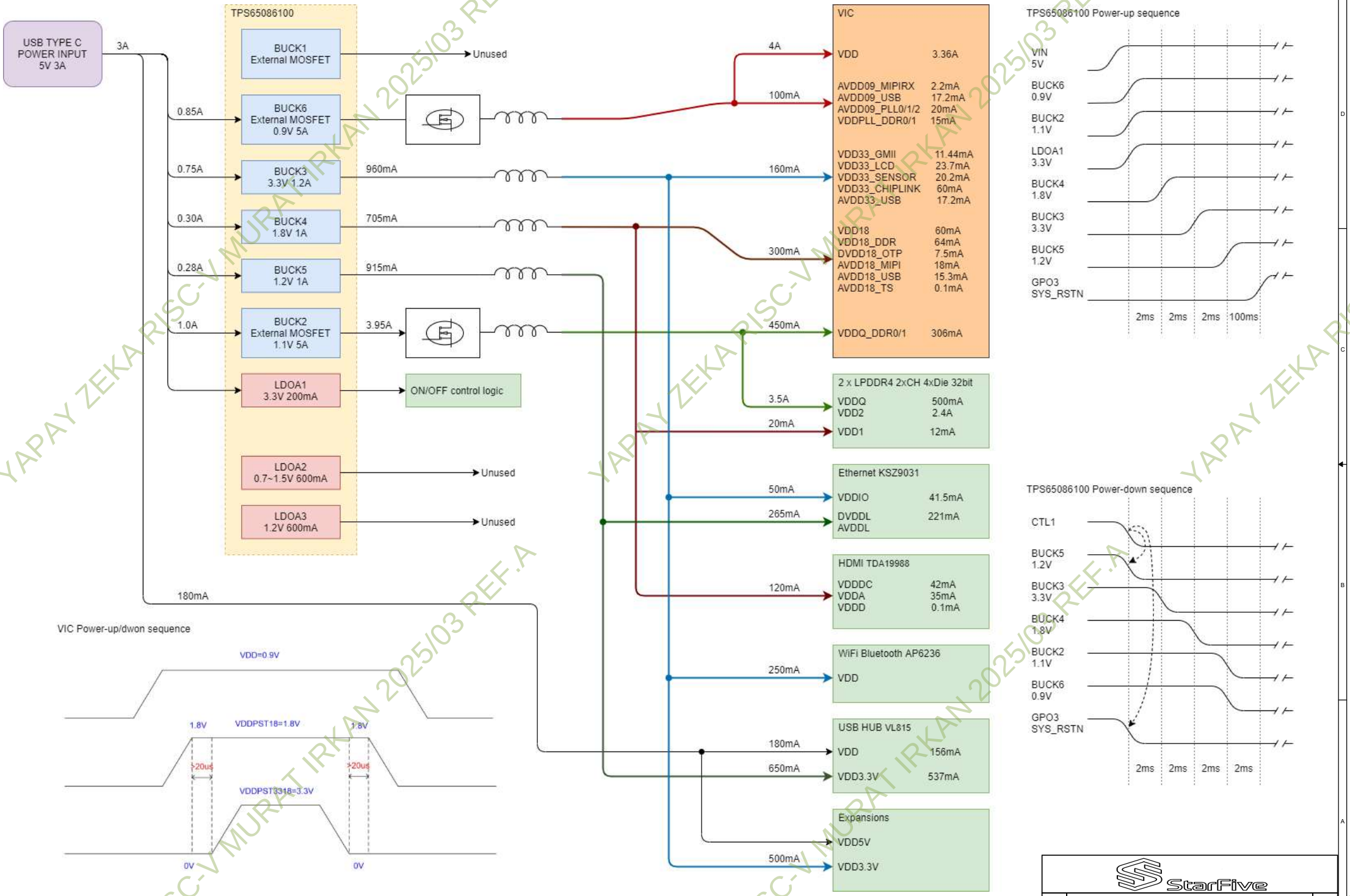

Size: A3	Title: VisionFive v1 / Document Number: Power Tree Diagram	REV: V1.0
Date: Saturday, January 22, 2022	Sheet 3 of 22	

YAPAY ZEKA RISC-V MURAT IRKAN 2025/03 REF.A

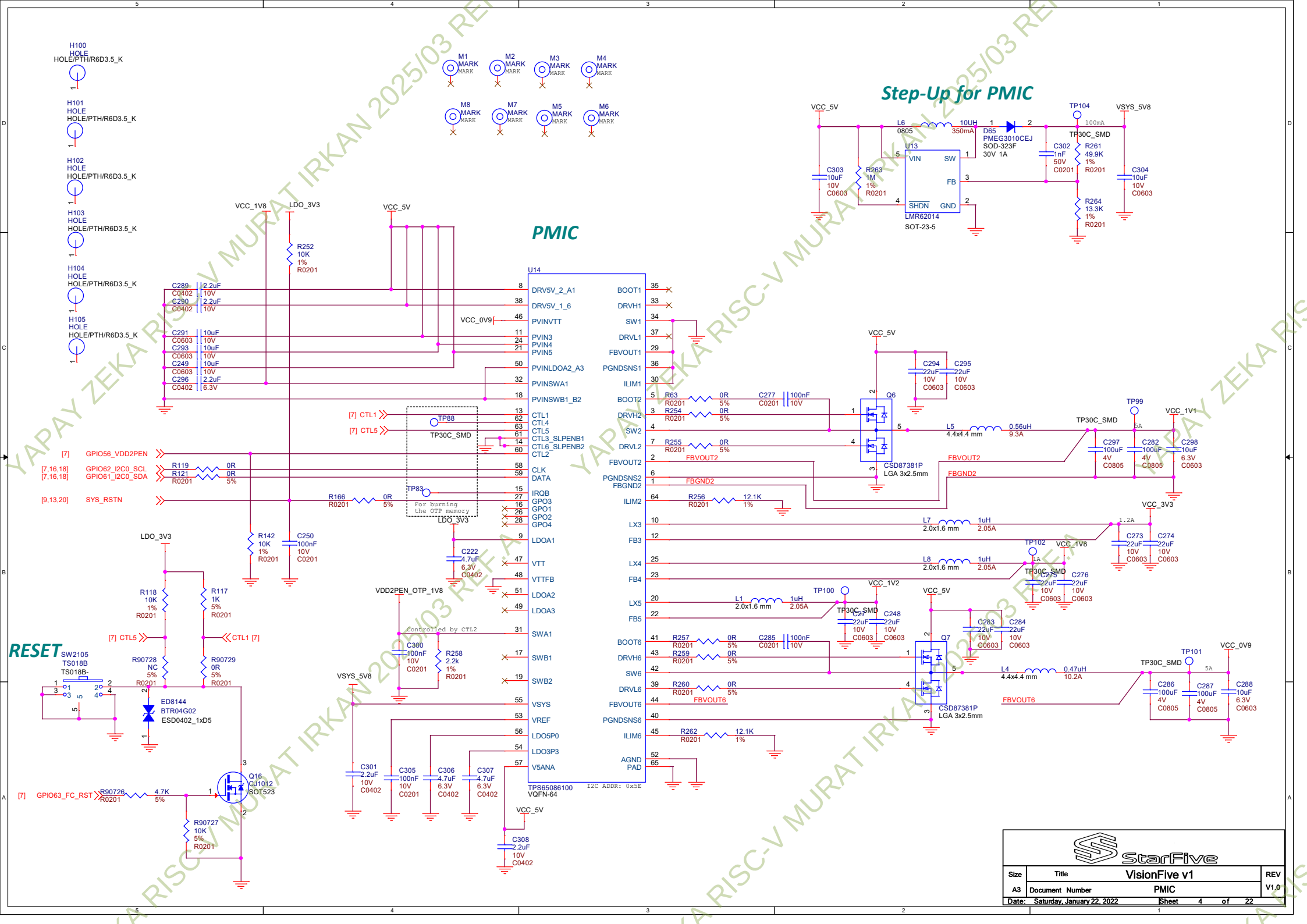

YAPAY ZEKA RISC-V MURAT IRKAN 2025/03 REF.A

Size	Title	VisionFive v1	REV
A3	Document Number	PMIC	V1.0
Date: Saturday, January 22, 2022	Sheet 4 of 22		

VIC Power

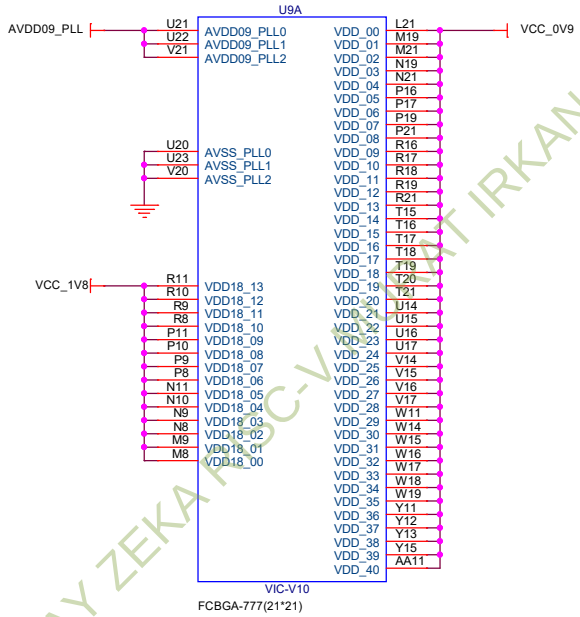

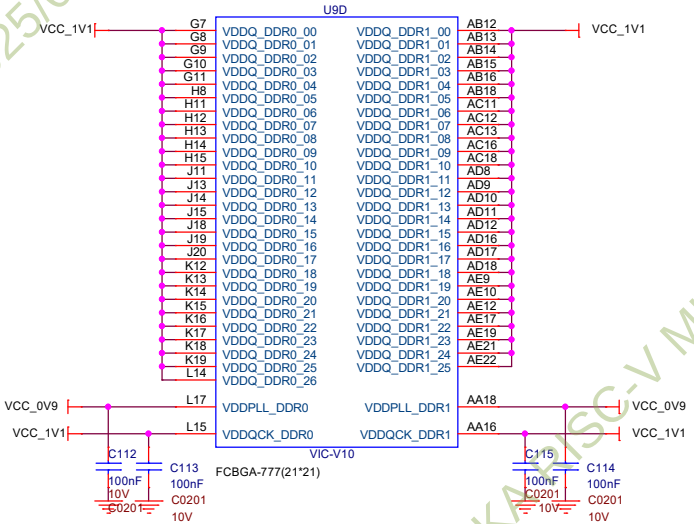

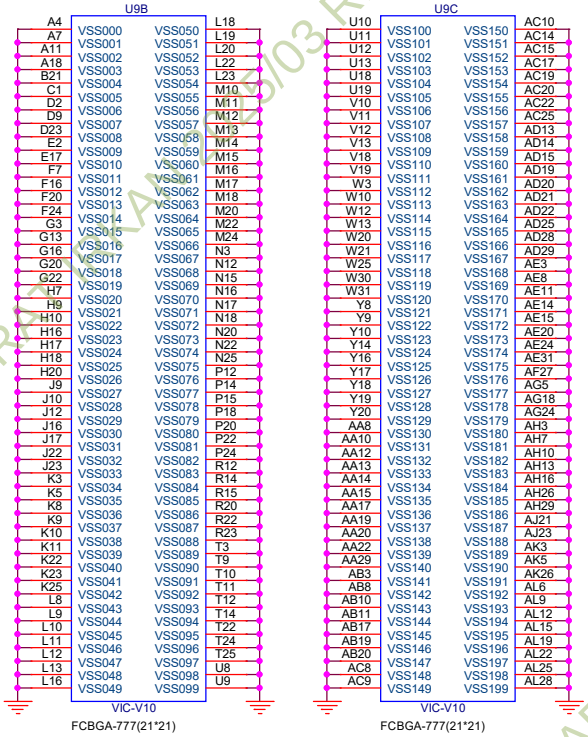

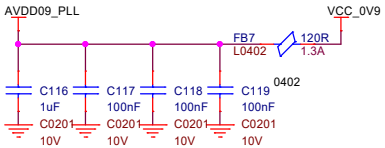

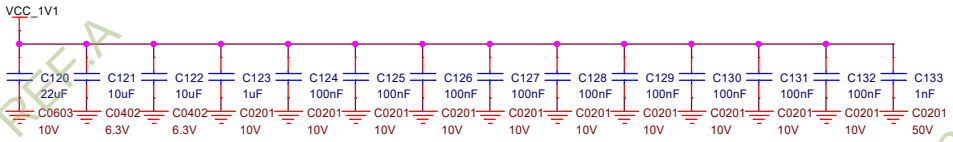

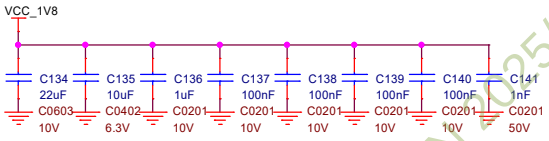

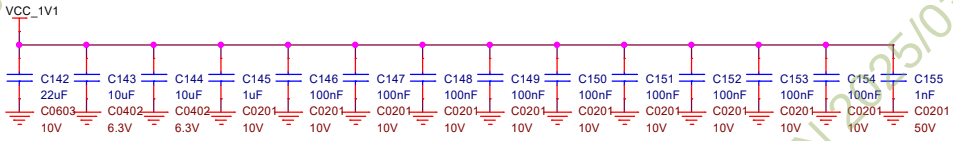

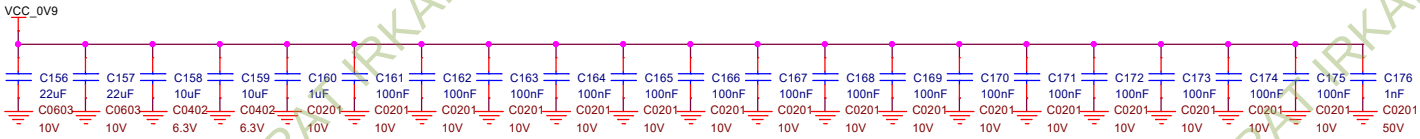

StarFive

Size	Title	REV
A3	VisionFive v1	V1.0
	Document Number: VIC Power	
Date: Saturday, January 22, 2022	Sheet 5 of 22	

YAPAY ZEKA RISC-V MURAT IRKAN 2025/03 REF.A

VIC DDR controller

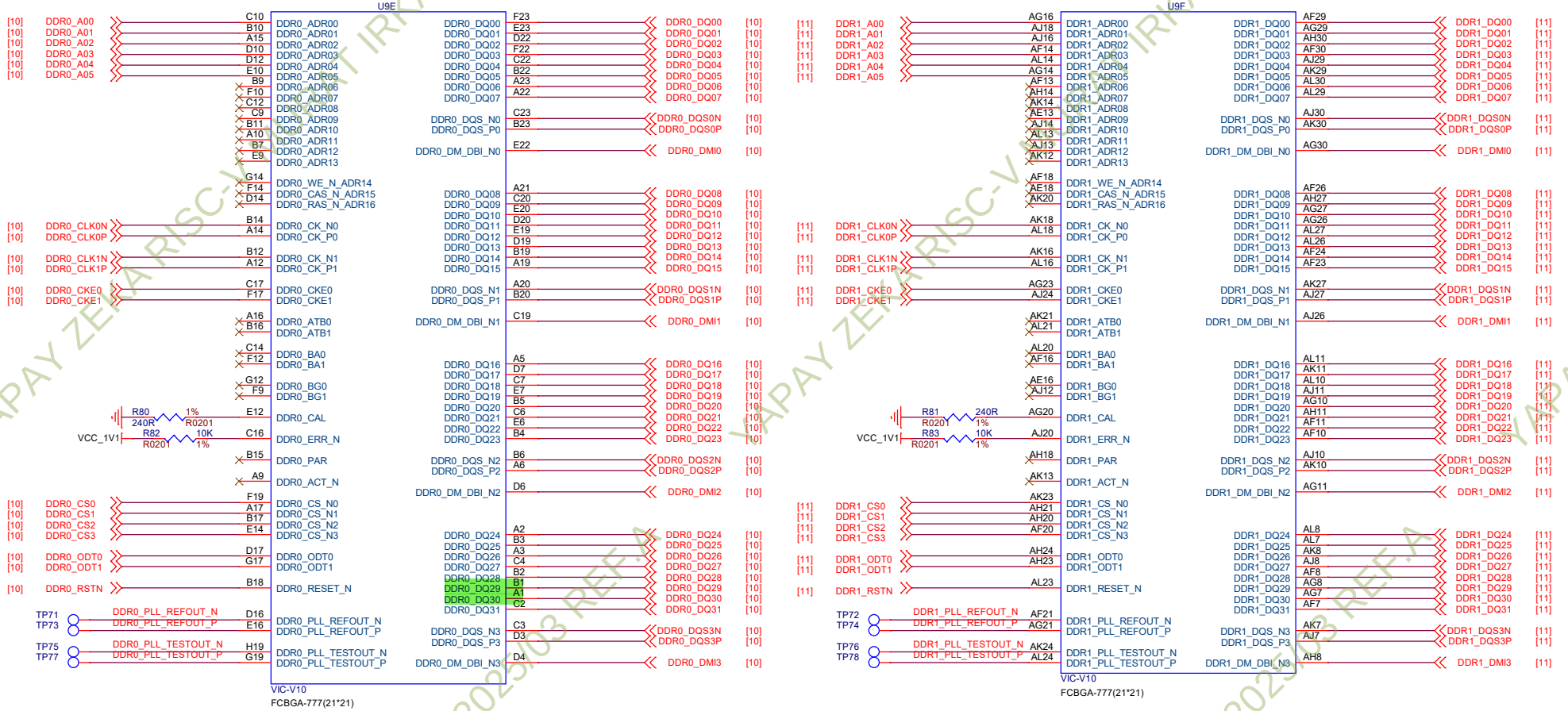

Size	Title	VisionFive v1	REV
A3	Document Number	VIC DDR Ctrl	V1.0
Date:	Saturday, January 22, 2022	Sheet 6 of 22	

YAPAY ZEKA RISC-V MURAT IRKAN 2025/03 REF.A

VIC 3.3V GPIOs

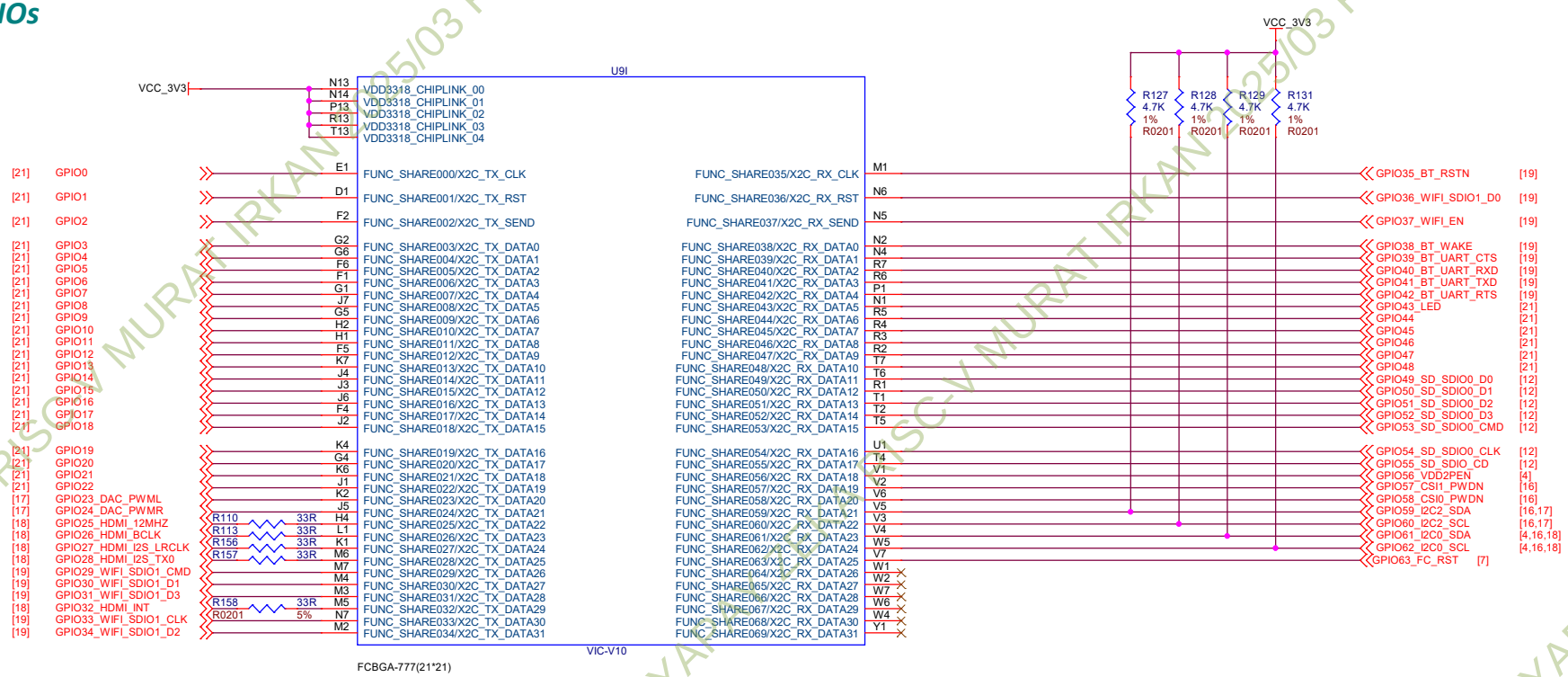

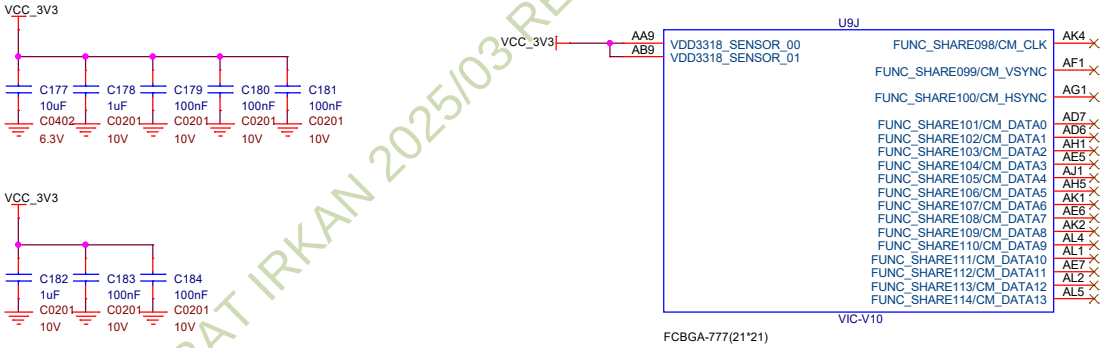

StarFive			
Size	Title	VisionFive v1	REV
A3	Document Number	VIC ChipLink & CM	V1.0
Date: Saturday, January 22, 2022	Sheet 7 of 22		

YAPAY ZEKA RISC-V MURAT IRKAN 2025/03 REF.A

VIC LCD&RGMII

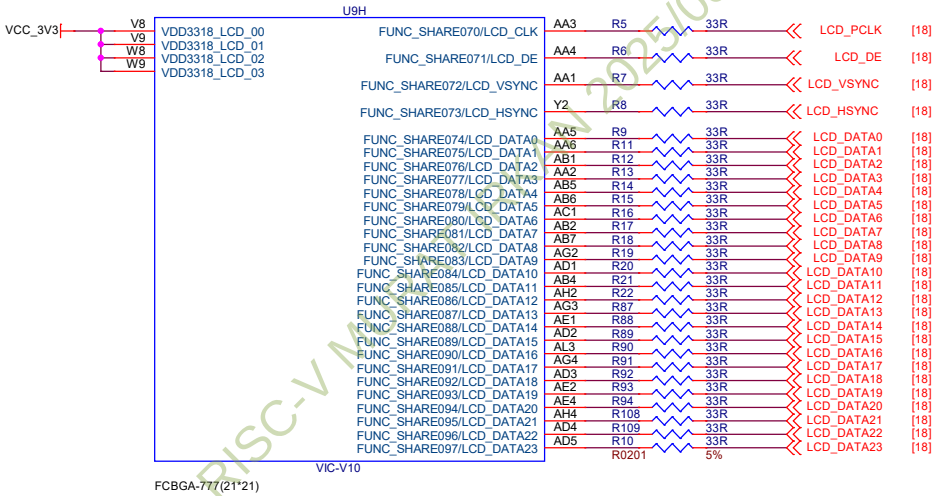

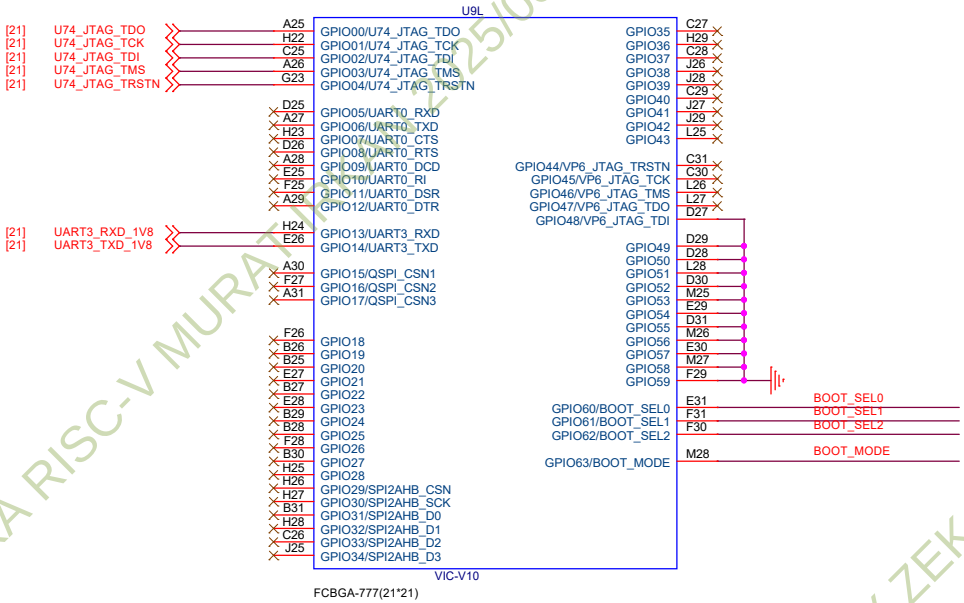

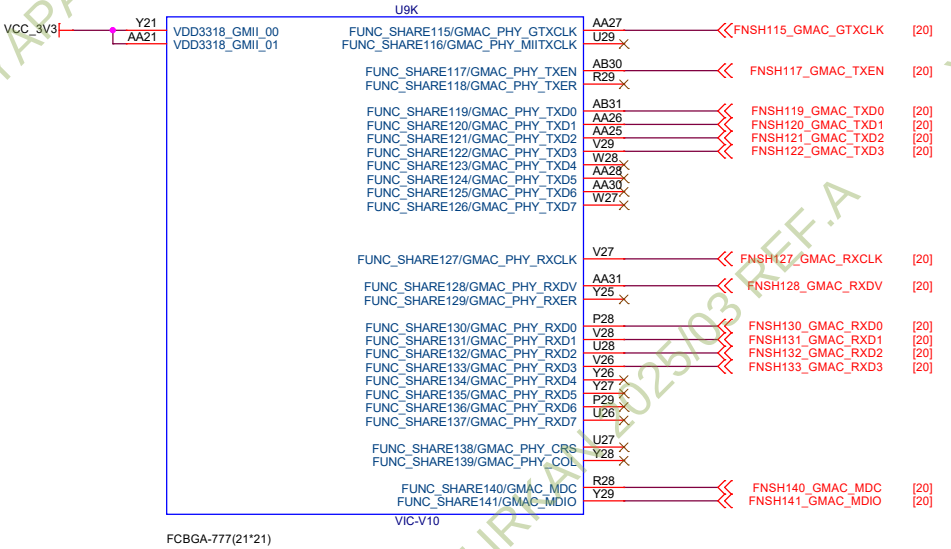

BOOT MODE

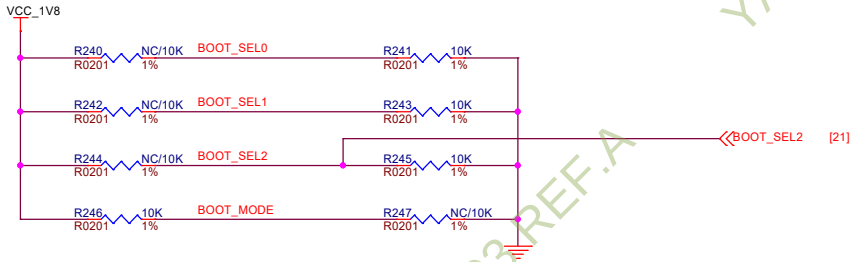

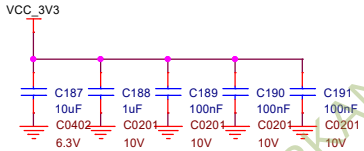

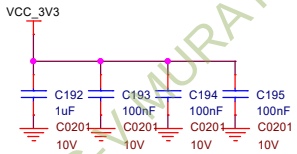

Size	Title	VisionFive v1	REV
A3	Document Number	VIC LCD & GMII & GPIOs	V1.0
Date: Saturday, January 22, 2022	Sheet 8 of 22		

YAPAY ZEKA RISC-V MURAT IRKAN 2025/03 REF.A

VIC MIPI&USB

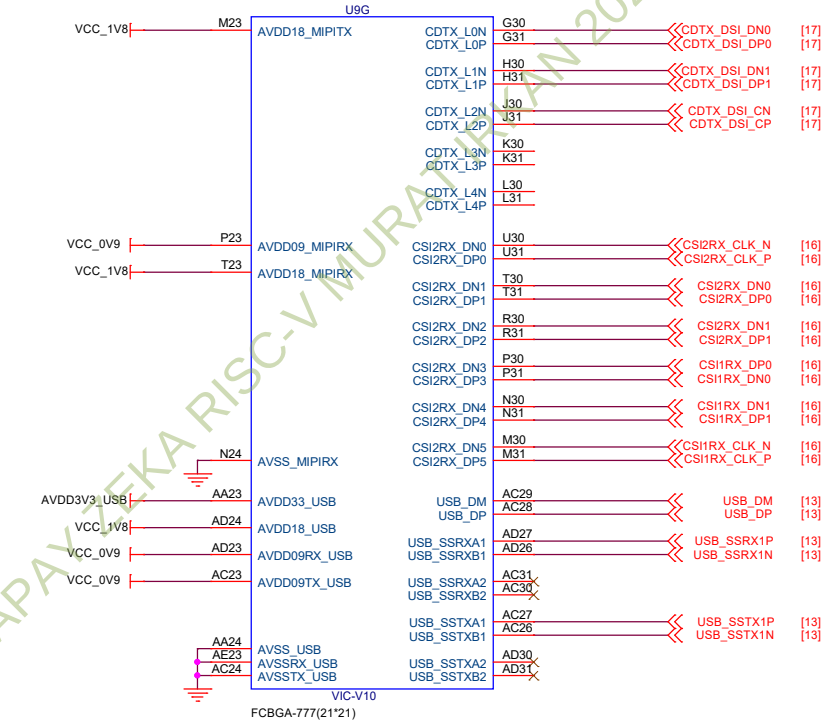

VIC Clock&

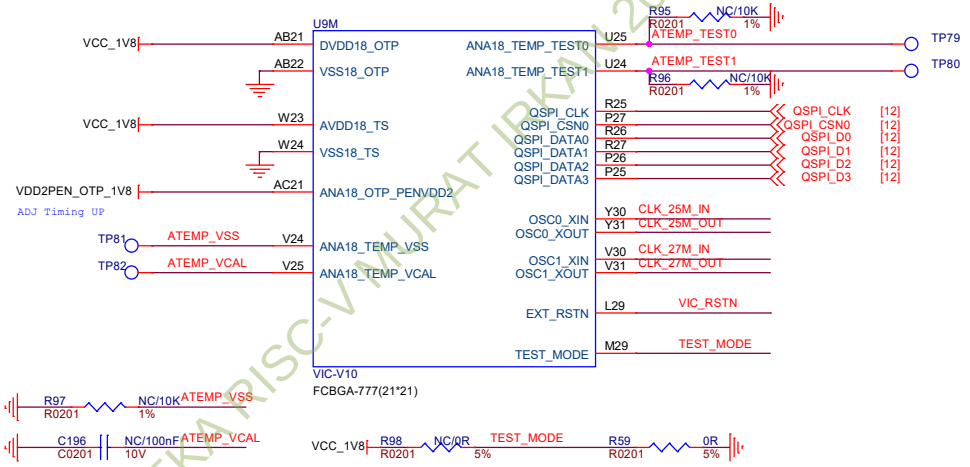

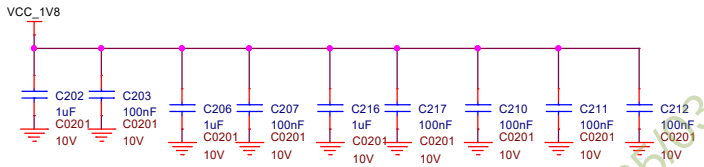

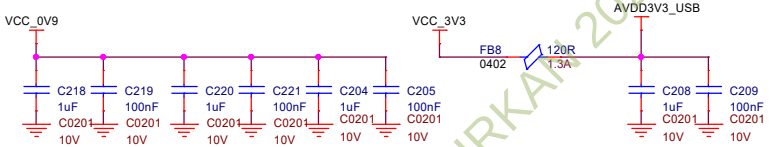

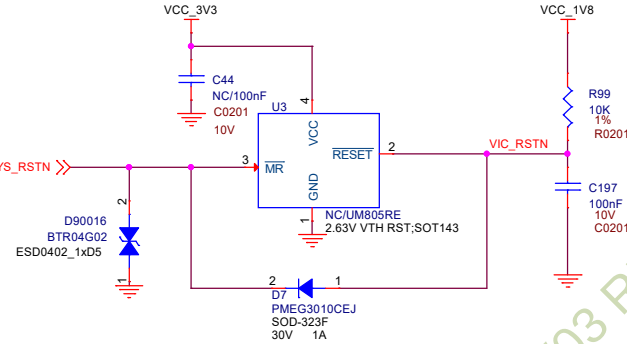

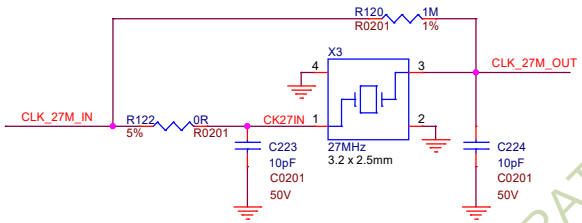

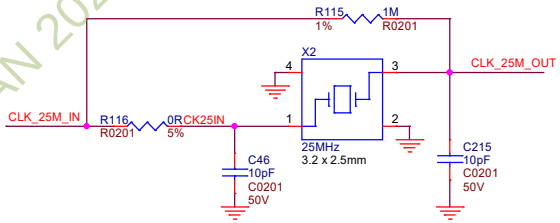

Size	Title	VisionFive v1	REV
A3	Document Number	VIC HighIF & Ctrl Other	V1.0
Date: Saturday, January 22, 2022	Sheet 9 of 22		

YAPAY ZEKA RISC-V MURAT IRKAN 2025/03 REF.A

LPDDR4

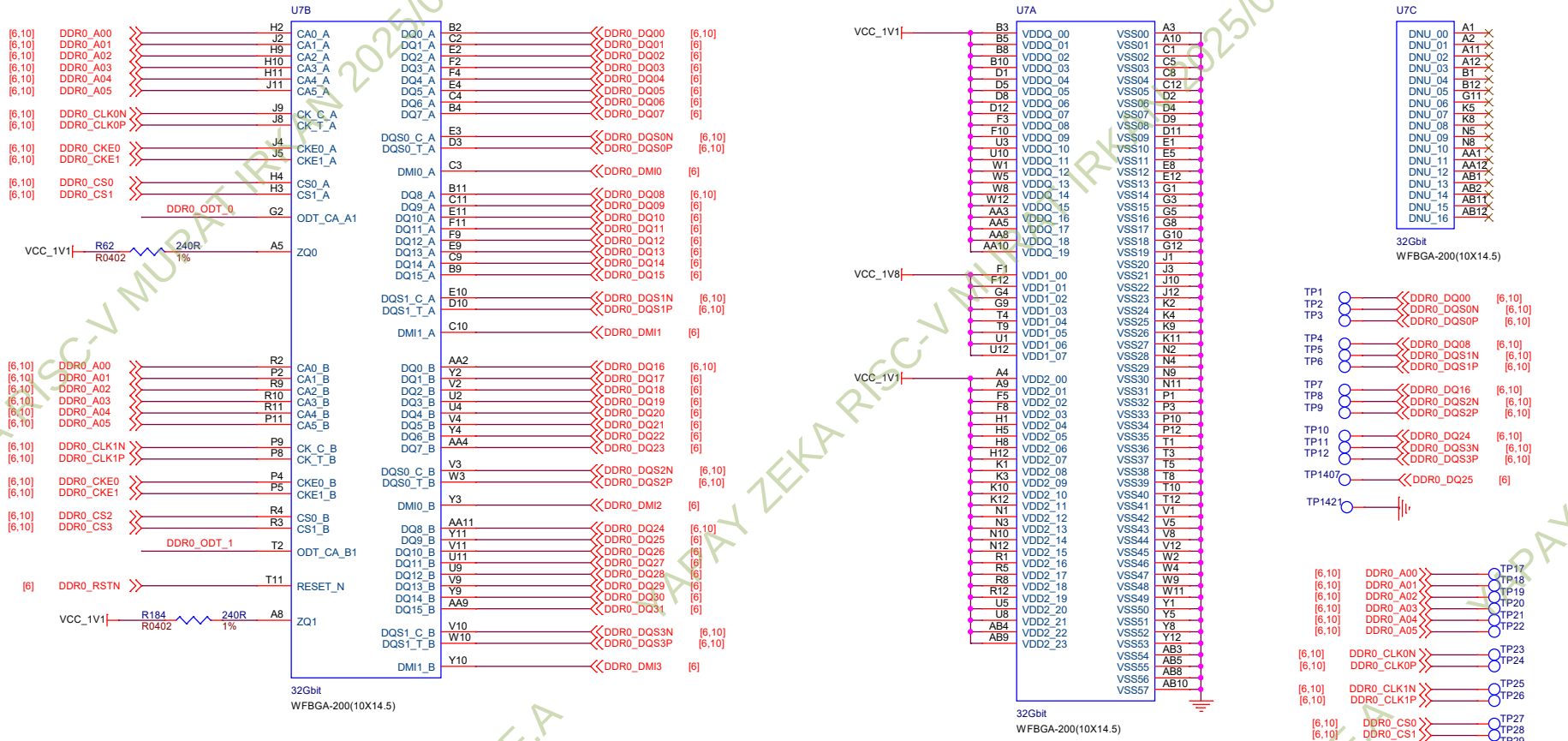

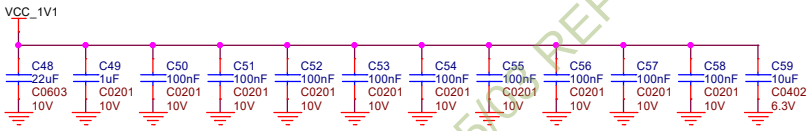

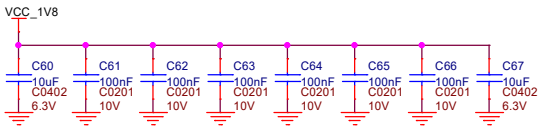

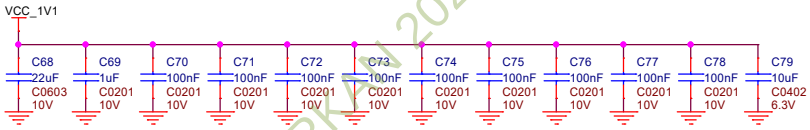

Size	Title	VisionFive v1	REV
A3	Document Number	LPDDR (A)	V1.0
Date: Saturday, January 22, 2022	Sheet 10 of 22		

YAPAY ZEKA RISC-V MURAT IRKAN 2025/03 REF.A

LPDDR4

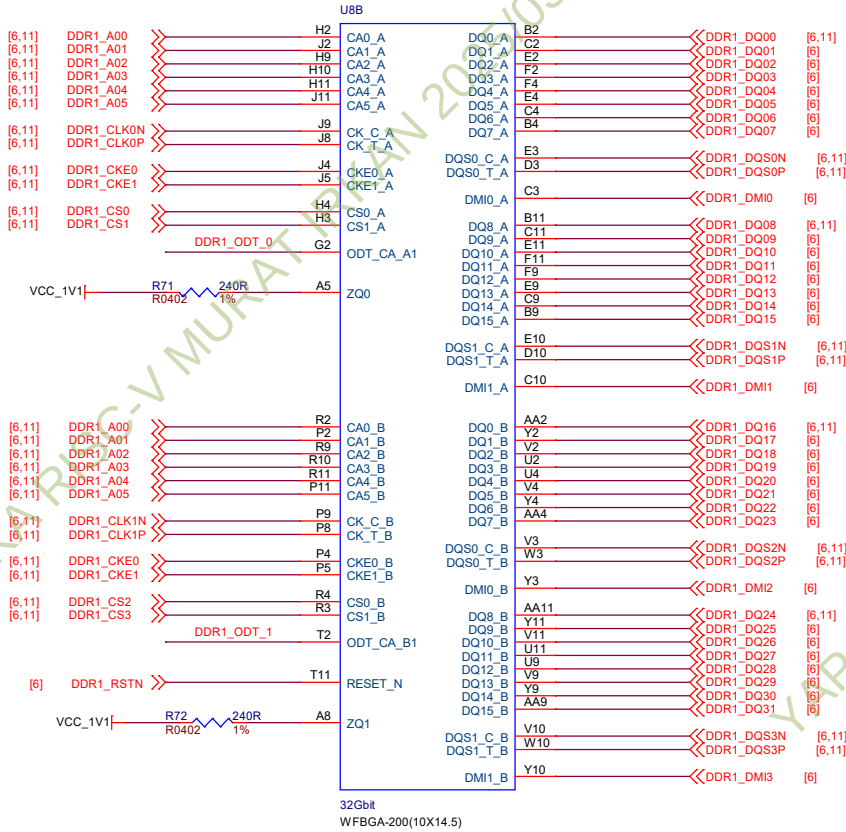

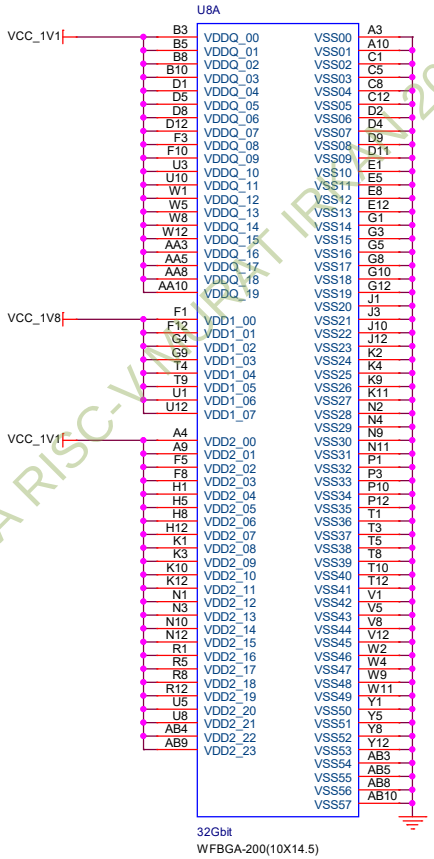

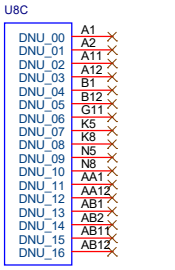

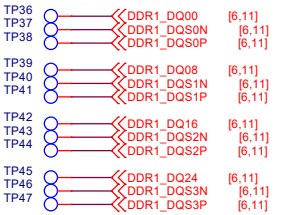

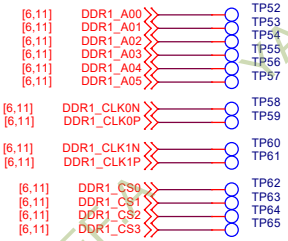

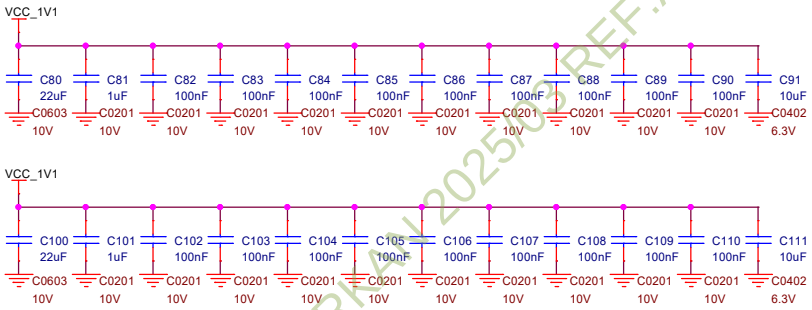

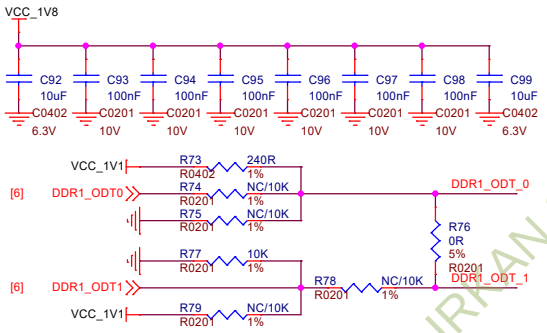

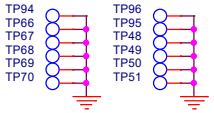

Size	Title	VisionFive v1	REV
A3	Document Number	LPDDR (B)	V1.0
Date:	Saturday, January 22, 2022	Sheet 11 of 22	

YAPAY ZEKA RISC-V MURAT IRKAN 2025/03 REF.A

Nor Flash For Boot

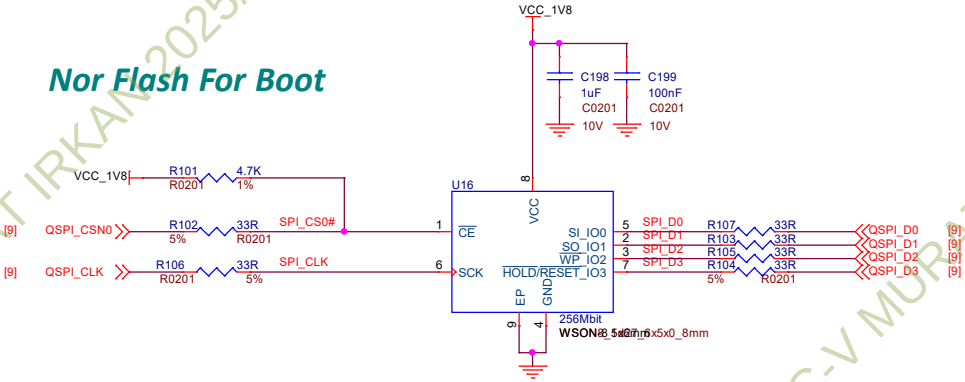

Micro SD Card

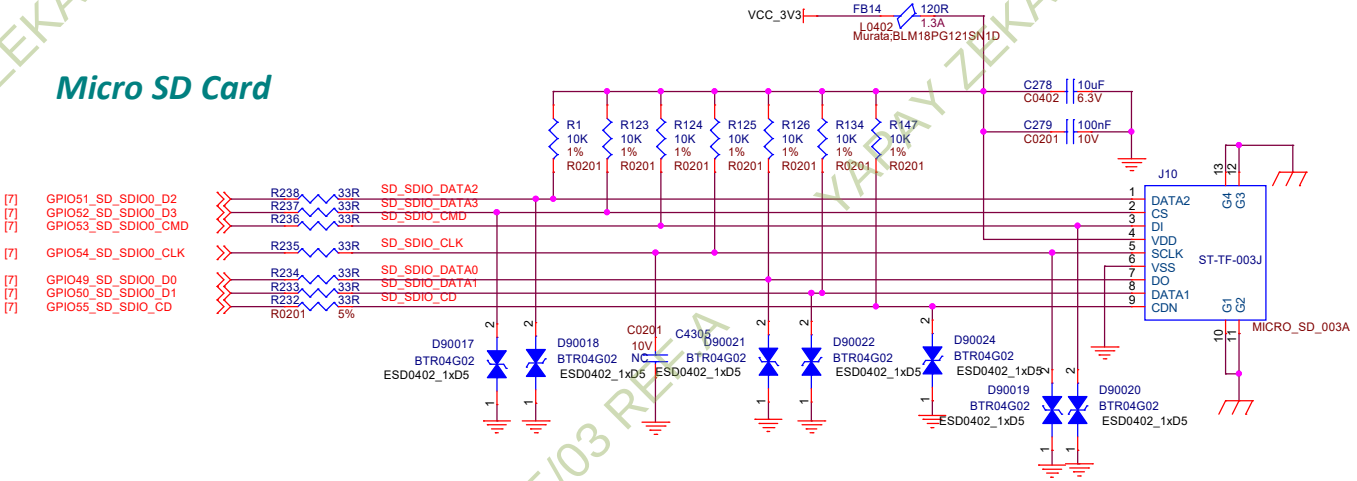

YAPAY ZEKA RISC-V MURAT IRKAN 2025/03 REF.A

Size	Title: VisionFive v1	REV
A3	Document Number: Type C,uSD, QSIP Flash	V1.0
Date: Saturday, January 22, 2022	Sheet 12 of 22	

USB 3.0 HUB
TBD

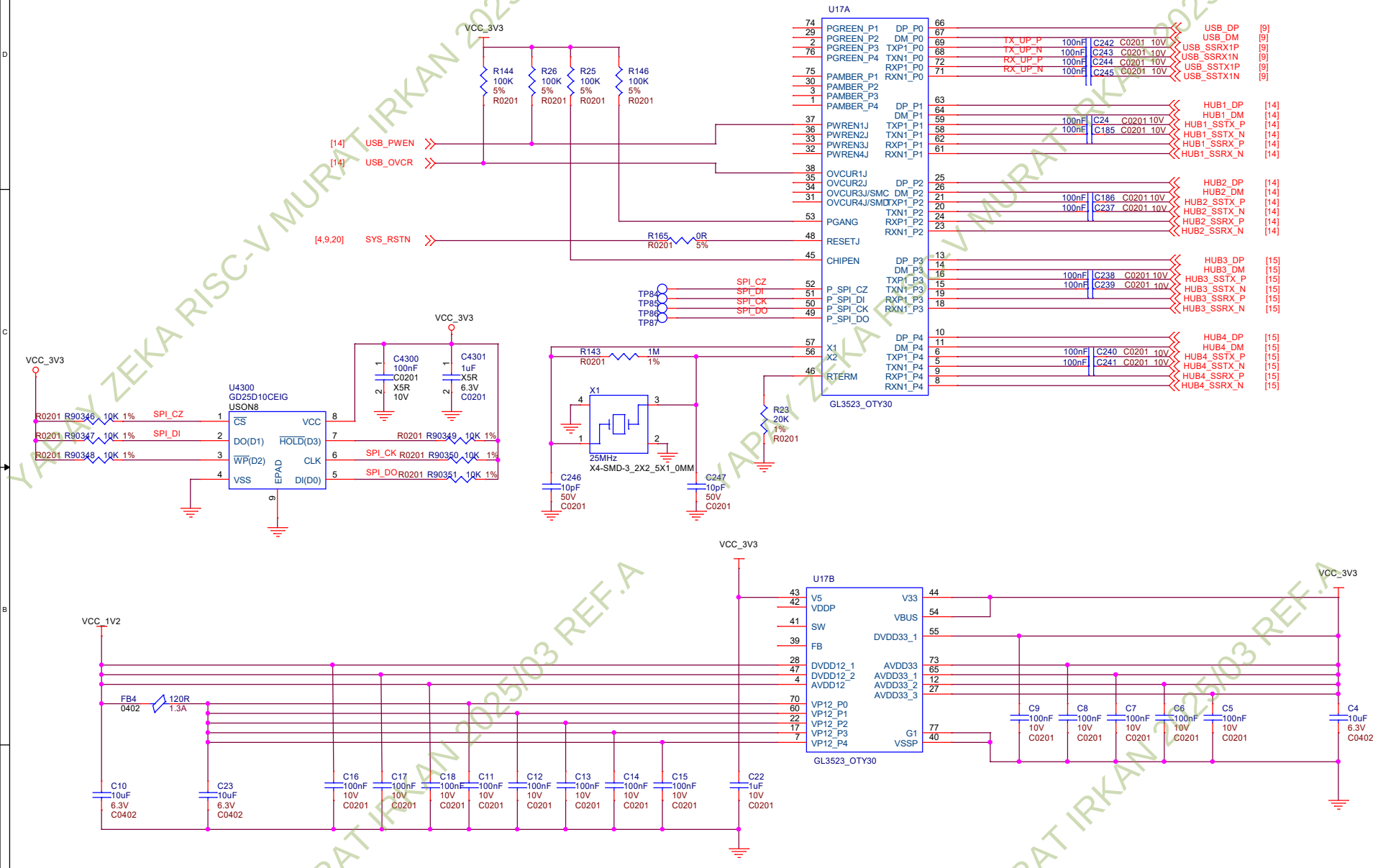

Size	Title	VisionFive v1	REV
A3	Document Number	USB 3.0 HUB	V1.0
Date: Saturday, January 22, 2022	Sheet 13 of 22		

YAPAY ZEKA RISC-V MURAT IRKAN 2025/03 REF.A

USB 3.0 TYPE A x2

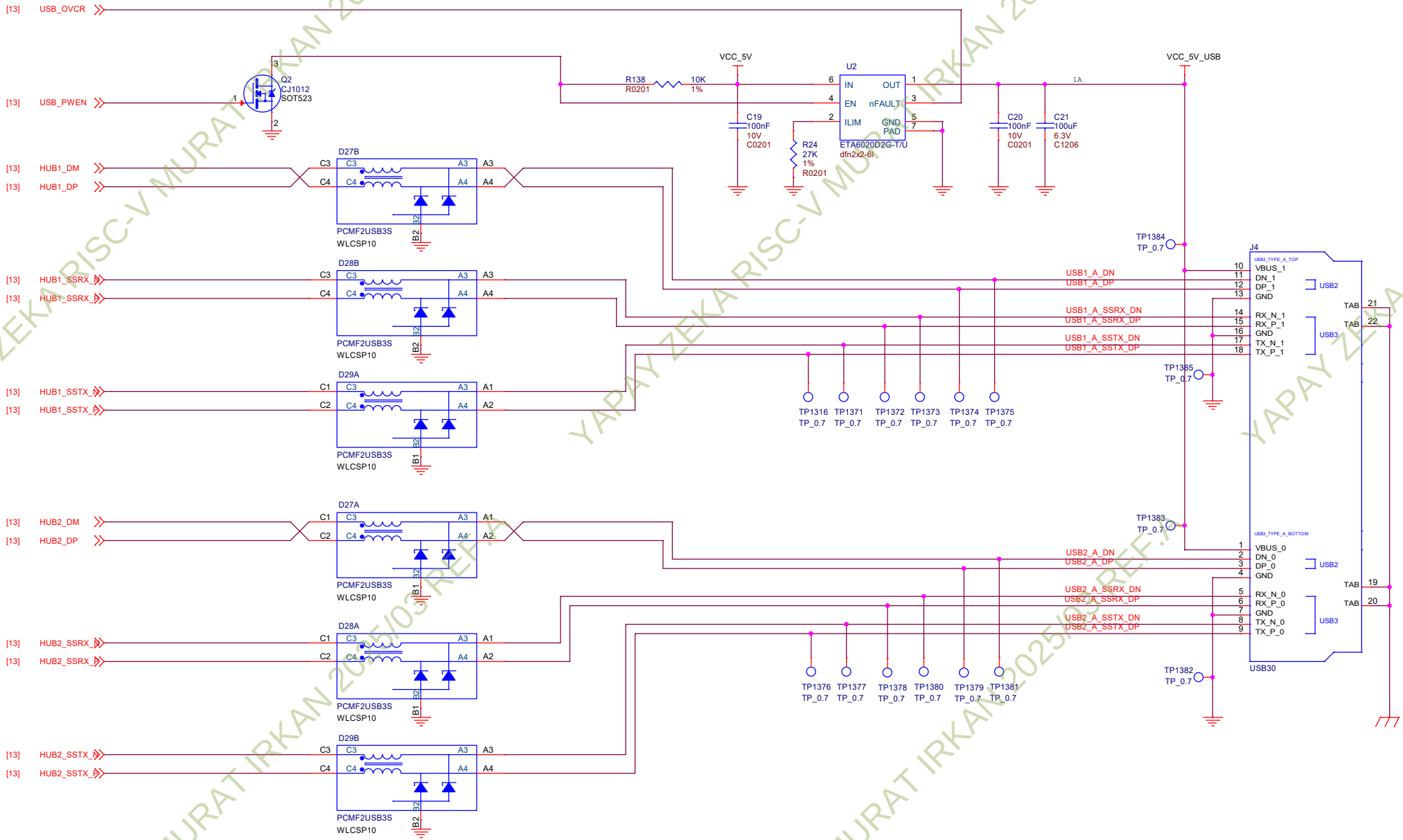

YAPAY ZEKA RISC-V MURAT IRKAN 2025/03 REF.:

Size	Title: VisionFive v1	REV
A3	Document Number: 2 x USB TYPE A (A)	V1.0
Date: Saturday, January 22, 2022	Sheet 14 of 22	

USB 3.0 TYPE A x2

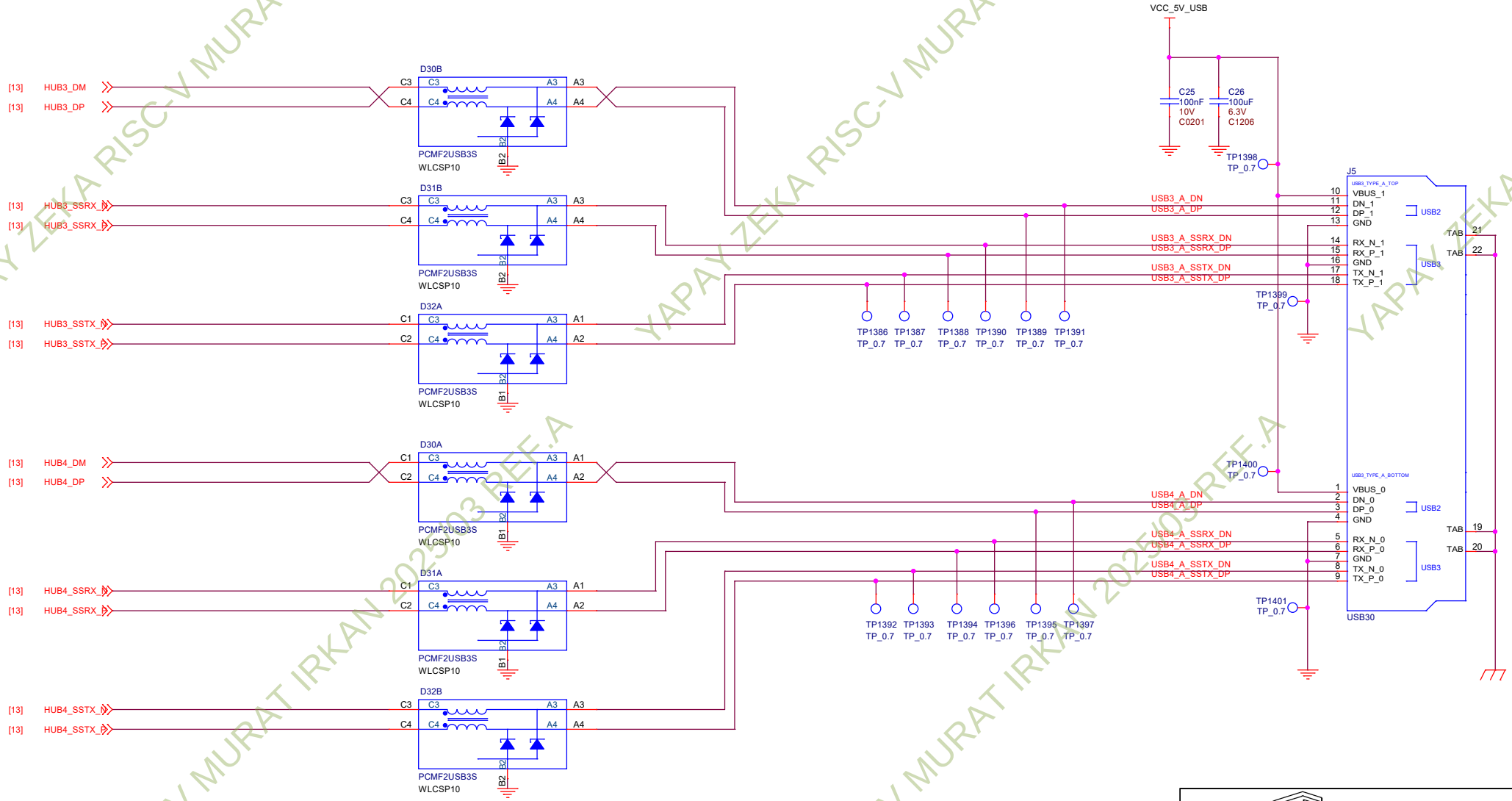

StarFive		
Size: A3	Title: VisionFive v1	REV: V1.0
	Document Number: 2 x USB TYPE A (B)	
Date: Saturday, January 22, 2022	Sheet 15 of 22	

YAPAY ZEKA RISC-V MURAT IRKAN 2025/03 REF.A

CAMERA CONNECTOR

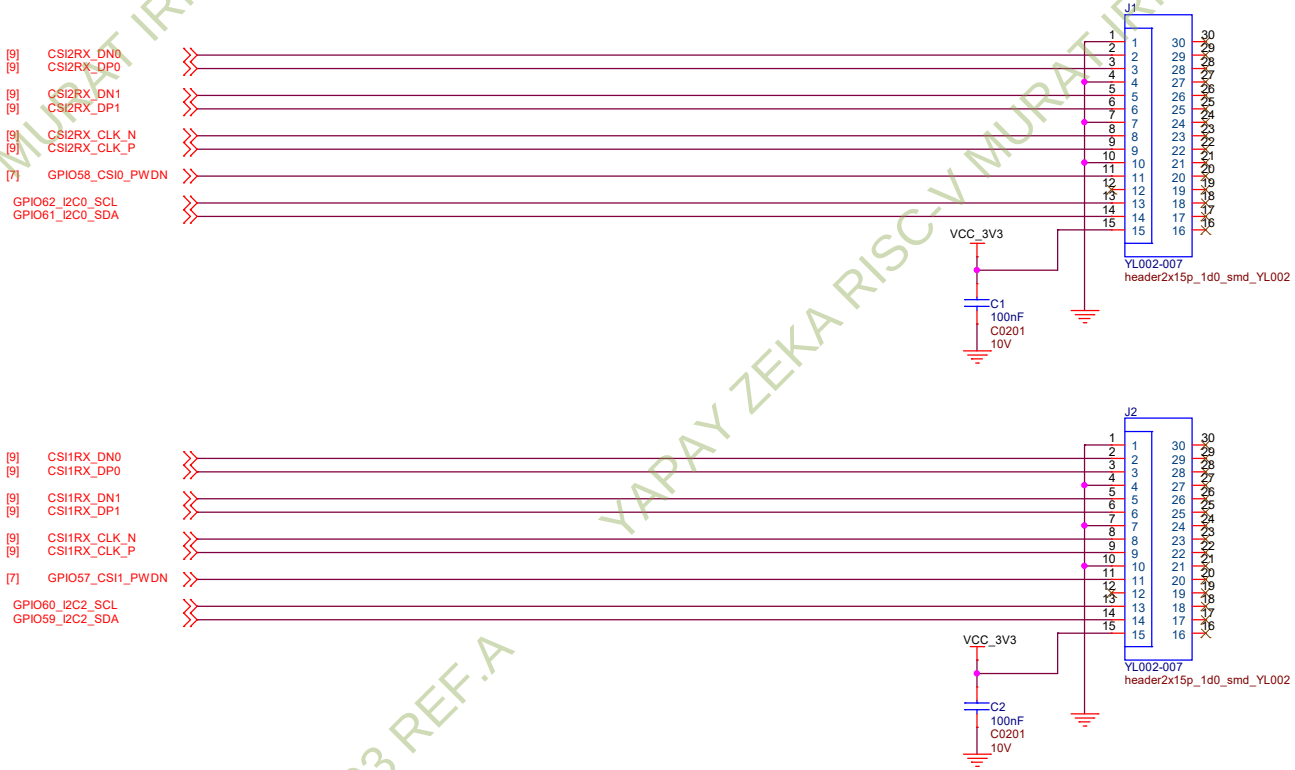

YAPAY ZEKA RISC-V MURAT IRKAN 2025/03 REF.A

StarFive		
Size	Title: VisionFive v1	REV
A3	Document Number: 2 x CSI CONN	V1.0
Date: Saturday, January 22, 2022	Sheet 16 of 22	

YAPAY ZEKA RISC-V MURAT IRKAN 2025/03 REF.A

DISPLAY CONNECTOR

AUDIO

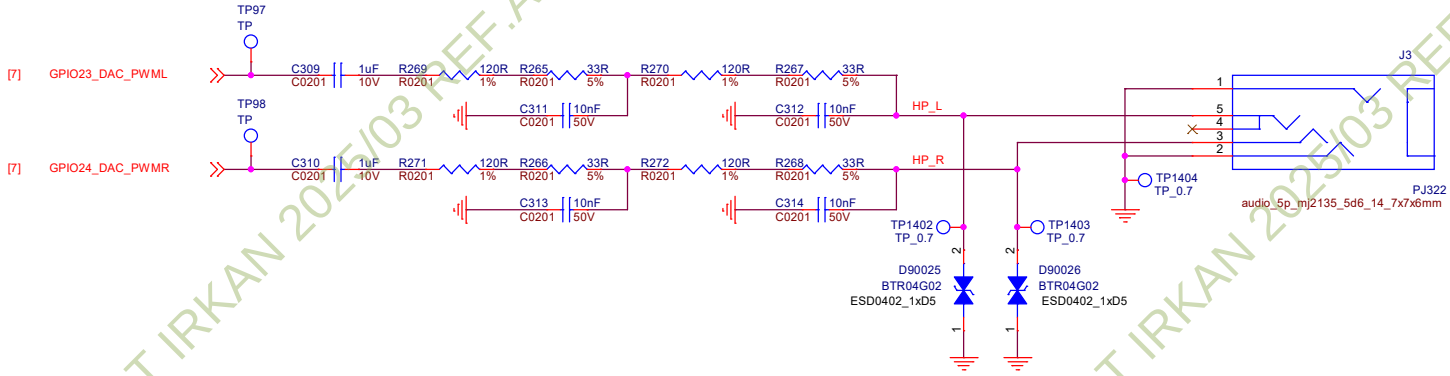

StarFive		
Size: A3	Title: VisionFive v1	REV: V1.0
	Document Number: DSI, AUDIO JACK	
Date: Saturday, January 22, 2022	Sheet 17 of 22	

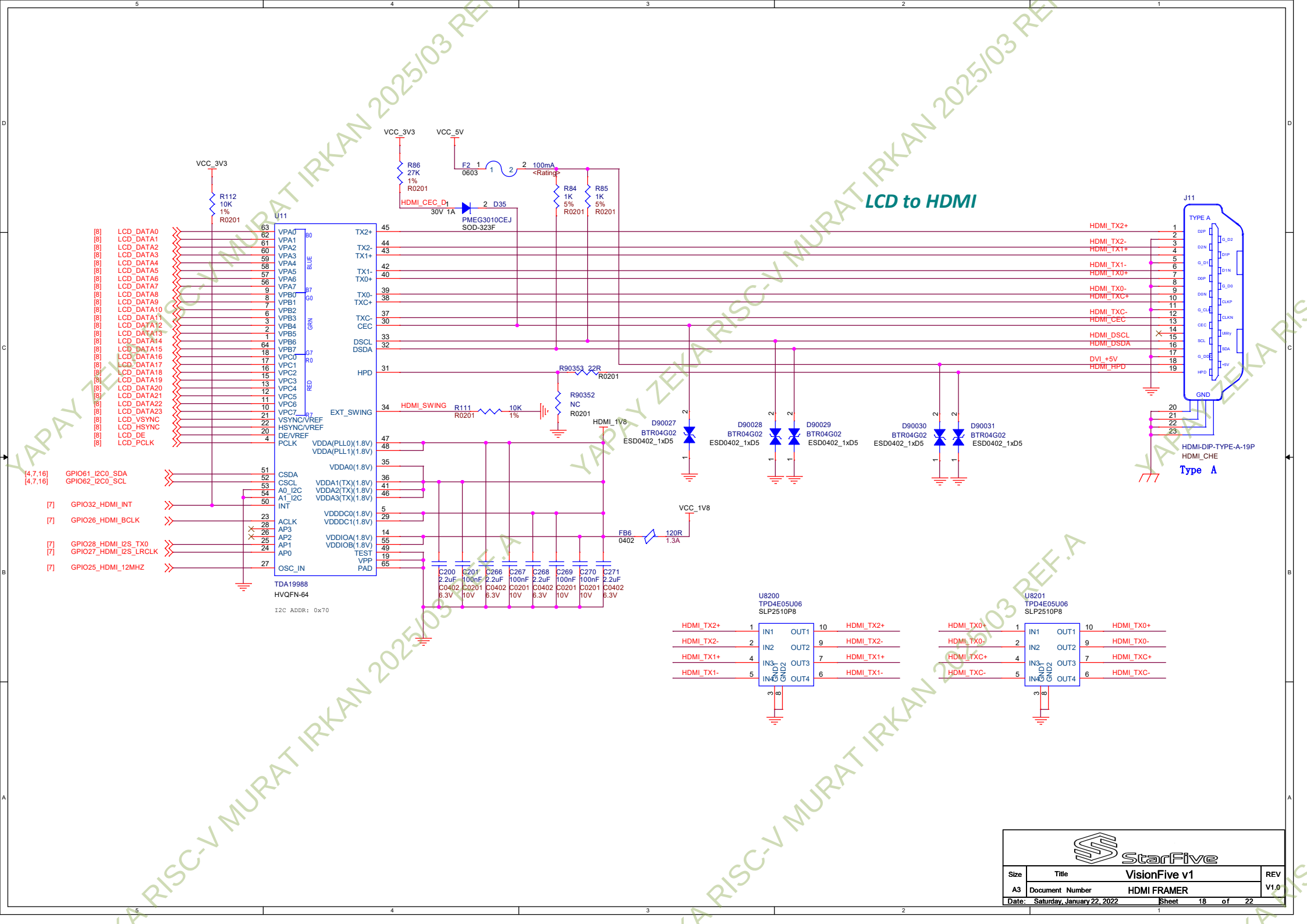
LCD to HDMI
VCC_3V3
VCC_5V
R112 10K 1% R0201
R86 27K 1% R0201
F2 0603 100mA <Rating>
HDMI_CEC_D
D35 PMEG3010CEJ SOD-323F
R84 1K 5% R0201
R85 1K 5% R0201
U11
TDA19988
HVQFN-64
I2C ADDR: 0x70
LCD_DATA0
LCD_DATA1
LCD_DATA2
LCD_DATA3
LCD_DATA4
LCD_DATA5
LCD_DATA6
LCD_DATA7
LCD_DATA8
LCD_DATA9
LCD_DATA10
LCD_DATA11
LCD_DATA12
LCD_DATA13
LCD_DATA14
LCD_DATA15
LCD_DATA16
LCD_DATA17
LCD_DATA18
LCD_DATA19
LCD_DATA20
LCD_DATA21
LCD_DATA22
LCD_DATA23
LCD_VSYNC
LCD_HSYNC
LCD_DE
LCD_PCLK
BLUE
GRN
RED
TX2+
TX2-
TX1+
TX1-
TX0+
TX0-
TXC+
TXC-
CEC
DSCL
DSDA
HPD
EXT_SWING
HDMI_SWING
R111 10K 1%
R90353 22R R0201
R90352 NC R0201
HDMI_1V8
VCC_1V8
FB6 0402 120R 1.3A
GPIO61_I2C0_SDA
GPIO62_I2C0_SCL
GPIO32_HDMI_INT
GPIO26_HDMI_BCLK
GPIO28_HDMI_I2S_TX0
GPIO27_HDMI_I2S_LRCLK
GPIO25_HDMI_12MHZ
C200 2.2uF C0402 6.3V
C201 100nF C0201 10V
C266 2.2uF C0402 6.3V
C267 100nF C0201 10V
C268 2.2uF C0402 6.3V
C269 100nF C0201 10V
C270 100nF C0201 10V
C271 2.2uF C0402 6.3V
D90027 BTR04G02 ESD0402_1xD5
D90028 BTR04G02 ESD0402_1xD5
D90029 BTR04G02 ESD0402_1xD5
D90030 BTR04G02 ESD0402_1xD5
D90031 BTR04G02 ESD0402_1xD5
J11
TYPE A
HDMI-DIP-TYPE-A-19P
HDMI_CHE
Type A
U8200
TPD4E05U06
SLP2510P8
U8201
TPD4E05U06
SLP2510P8
StarFive
Size A3
Title VisionFive v1
REV V1.0
Document Number HDMI FRAMER
Date: Saturday, January 22, 2022
Sheet 18 of 22

WiFi & Bluetooth

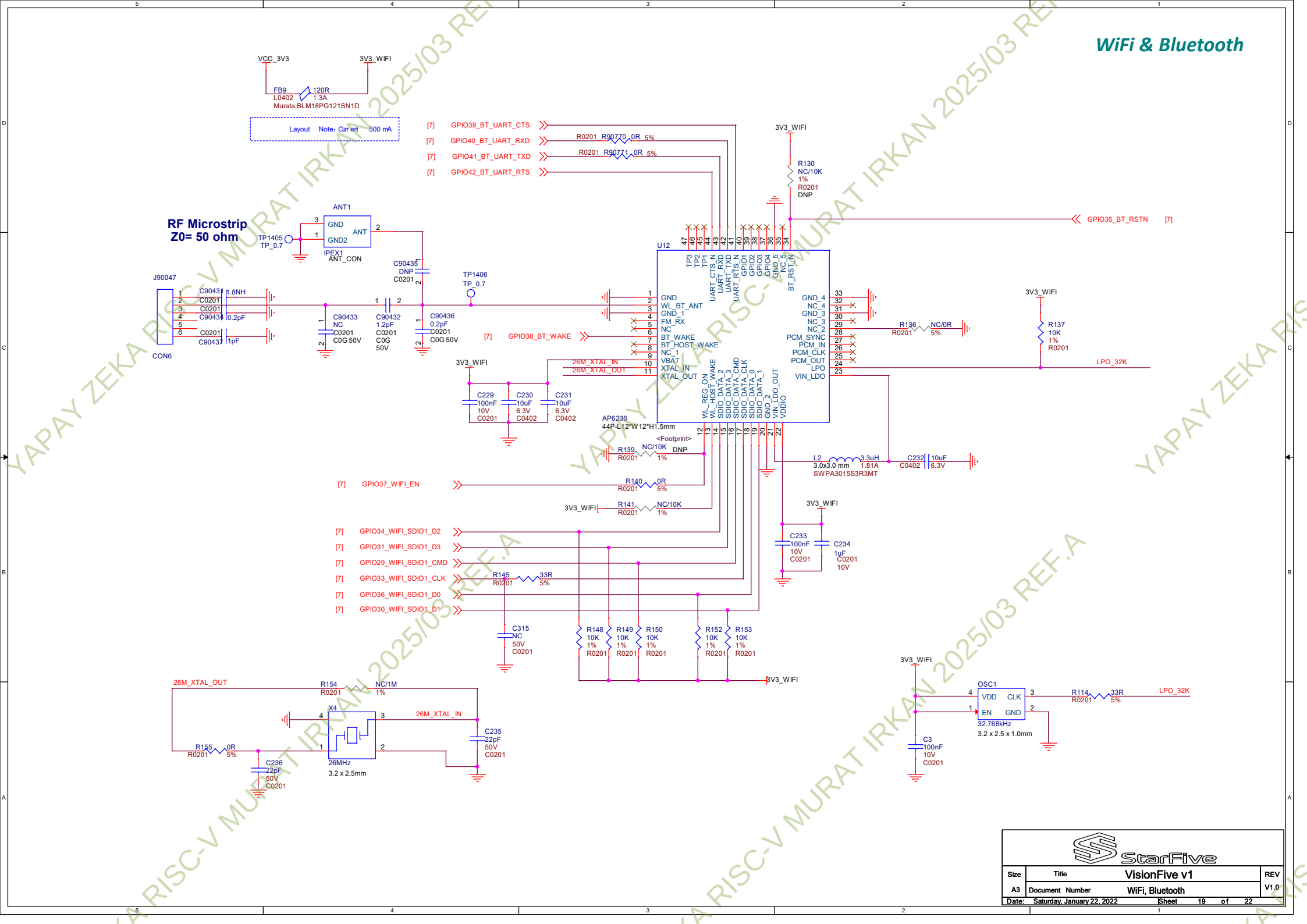

YAPAY ZEKA RISC-V MURAT IRKAN 2025/03 REF.A

Size	Title: VisionFive v1	REV
A3	Document Number: WiFi, Bluetooth	V1.0
Date: Saturday, January 22, 2022	Sheet 19 of 22	

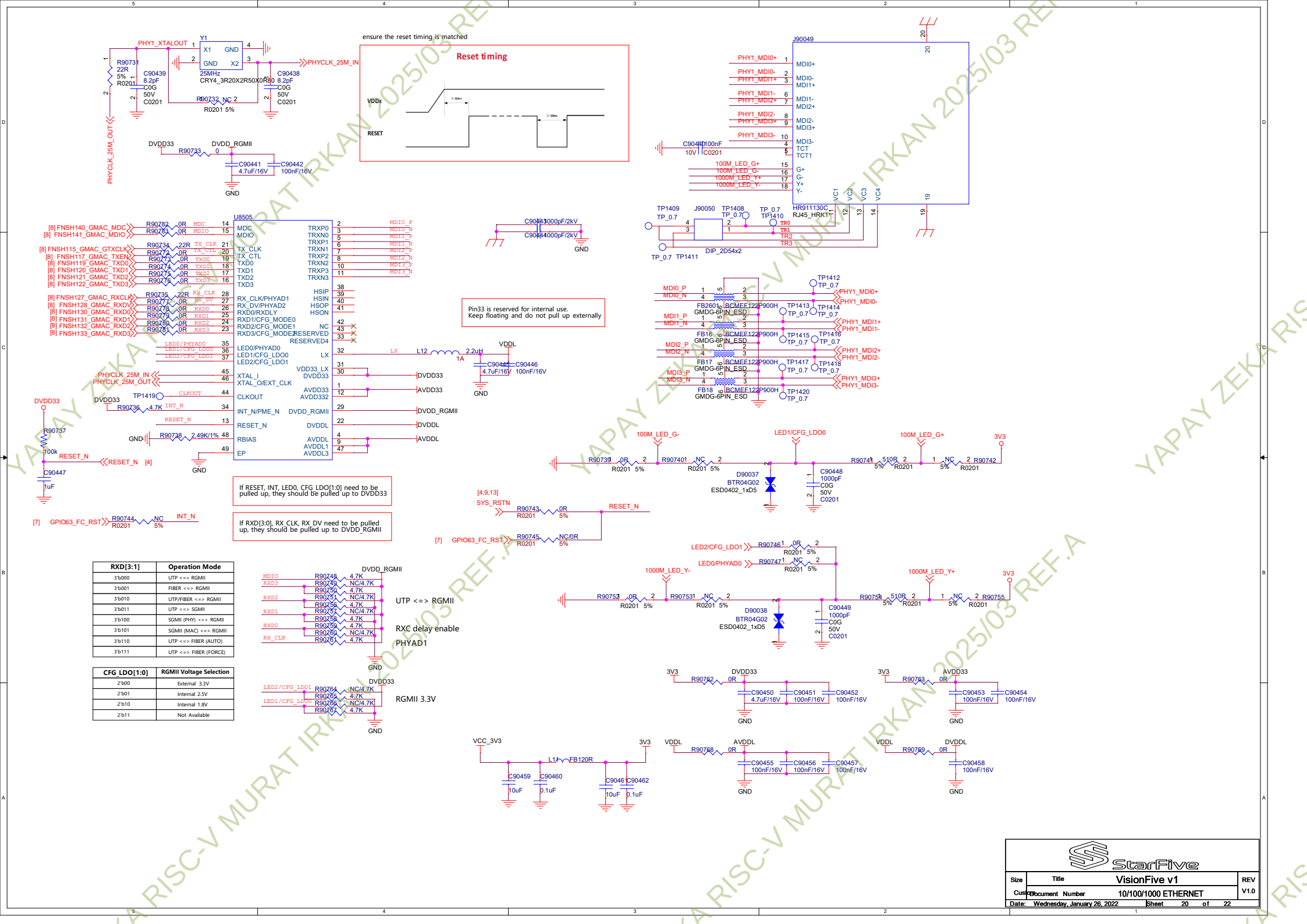
PHY1_XTALOUT
Y1
25MHz
CRY4_3R20X2R50X0R80
C90439 8.2pF C0G 50V C0201
C90438 8.2pF C0G 50V C0201
R90731 22R 5% R0201
R90732 NC 2 R0201 5%
PHYCLK_25M_IN
PHYCLK_25M_OUT
ensure the reset timing is matched
Reset timing
VDDx
RESET
DVDD33
DVDD_RGMII
R90733 0
C90441 4.7uF/16V
C90442 100nF/16V
GND
J90049
PHY1_MDI0+
PHY1_MDI0-
PHY1_MDI1+
PHY1_MDI1-
PHY1_MDI2+
PHY1_MDI2-
PHY1_MDI3+
PHY1_MDI3-
MDI0+
MDI0-
MDI1+
MDI1-
MDI2+
MDI2-
MDI3+
MDI3-
TCT
TCT1
C90440 100nF 10V C0201
100M_LED_G+
100M_LED_G-
1000M_LED_Y+
1000M_LED_Y-
G+
G-
Y+
Y-
VC1
VC2
VC3
VC4
TP1409
TP1408
TP1410
TP_0.7
TR0
TR1
TR2
TR3
TP1411
J90050
DIP_2D54x2
HR911130C
RJ45_HRK1
U8505
[8] FNSH140_GMAC_MDC
[8] FNSH141_GMAC_MDIO
[8] FNSH115_GMAC_GTXCLK
[8] FNSH117_GMAC_TXEN
[8] FNSH119_GMAC_TXD0
[8] FNSH120_GMAC_TXD1
[8] FNSH121_GMAC_TXD2
[8] FNSH122_GMAC_TXD3
[8] FNSH127_GMAC_RXCLK
[8] FNSH128_GMAC_RXD3
[8] FNSH130_GMAC_RXD0
[8] FNSH131_GMAC_RXD1
[8] FNSH132_GMAC_RXD2
[8] FNSH133_GMAC_RXD3
MDC
MDIO
TX_CLK
TX_CTL
TXD0
TXD1
TXD2
TXD3
RX_CLK/PHYAD1
RX_DV/PHYAD2
RXD0/RXDLY
RXD1/CFG_MODE0
RXD2/CFG_MODE1
RXD3/CFG_MODE2
RESERVED4
LED0/PHYAD0
LED1/CFG_LDO0
LED2/CFG_LDO1
XTAL_I
XTAL_O/EXT_CLK
CLKOUT
INT_N/PME_N
RESET_N
RBIAS
EP
TRXP0
TRXN0
TRXP1
TRXN1
TRXP2
TRXN2
TRXP3
TRXN3
HSIP
HSIN
HSOP
HSON
NC
RESERVED
LX
VDD33_LX
DVDD33
AVDD33
AVDD332
DVDD_RGMII
DVDDL
AVDDL
AVDDL1
AVDDL3
L12 2.2uH 1A
C90445 4.7uF/16V
C90446 100nF/16V
VDDL
C90443 3000pF/2kV
C90444 4000pF/2kV
Pin33 is reserved for internal use.
Keep floating and do not pull up externally
MDI0_P
MDI0_N
MDI1_P
MDI1_N
MDI2_P
MDI2_N
MDI3_P
MDI3_N
FB2601 BCMEF122P900H GMDG-6PIN_ESD
FB16 BCMEF122P900H GMDG-6PIN_ESD
FB17 BCMEF122P900H GMDG-6PIN_ESD
FB18 BCMEF122P900H GMDG-6PIN_ESD
TP1412
TP1413
TP1414
TP1415
TP1416
TP1417
TP1418
TP1420
R90737 100k
RESET_N
C90447 1uF
TP1419
CLKOUT
R90736 4.7K
INT_N
R90738 2.49K/1%
If RESET, INT, LED0, CFG_LDO[1:0] need to be pulled up, they should be pulled up to DVDD33
If RXD[3:0], RX_CLK, RX_DV need to be pulled up, they should be pulled up to DVDD_RGMII
[7] GPIO63_FC_RST
R90744 NC R0201 5%
[4,9,13]
SYS_RSTN
R90743 0R R0201 5%
R90745 NC/0R R0201 5%
100M_LED_G-
LED1/CFG_LDO0
100M_LED_G+
3V3
R90739 0R R0201 5%
R907401 NC R0201 5%
R90741 510R R0201 5%
R90742 NC R0201 5%
D90037 BTR04G02 ESD0402_1xD5
C90448 1000pF C0G 50V C0201
LED2/CFG_LDO1
LED0/PHYAD0
1000M_LED_Y-
1000M_LED_Y+
R90746 0R R0201 5%
R907471 NC R0201 5%
R90751 0R R0201 5%
R907531 NC R0201 5%
R90754 510R R0201 5%
R90755 NC R0201 5%
D90038 BTR04G02 ESD0402_1xD5
C90449 1000pF C0G 50V C0201
RXD[3:1]
Operation Mode
3'b000 UTP <=> RGMII
3'b001 FIBER <=> RGMII
3'b010 UTP/FIBER <=> RGMII
3'b011 UTP <=> SGMII
3'b100 SGMII (PHY) <=> RGMII
3'b101 SGMII (MAC) <=> RGMII
3'b110 UTP <=> FIBER (AUTO)
3'b111 UTP <=> FIBER (FORCE)
CFG_LDO[1:0]
RGMII Voltage Selection
2'b00 External 3.3V
2'b01 Internal 2.5V
2'b10 Internal 1.8V
2'b11 Not Available
MDIO
RXD3
RXD2
RXD1
RXD0
RX_CLK
R90748 4.7K
R90749 NC/4.7K
R90750 4.7K
R90751 NC/4.7K
R90756 4.7K
R90757 NC/4.7K
R90758 4.7K
R90759 4.7K
R90760 NC/4.7K
R90761 4.7K
UTP <=> RGMII
RXC delay enable
PHYAD1
LED2/CFG_LDO1
LED1/CFG_LDO0
R90764 NC/4.7K
R90765 4.7K
R90766 NC/4.7K
R90767 4.7K
RGMII 3.3V
VCC_3V3
L11 FB120R
C90459 10uF
C90460 0.1uF
C90461 10uF
C90462 0.1uF
R90762 0R
C90450 4.7uF/16V
C90451 100nF/16V
C90452 100nF/16V
R90763 0R
C90453 100nF/16V
C90454 100nF/16V
R90768 0R
C90455 100nF/16V
C90456 100nF/16V
C90457 100nF/16V
R90769 0R
C90458 100nF/16V
StarFive
Size
Title
VisionFive v1
REV
V1.0
Custom Document Number
10/100/1000 ETHERNET
Date: Wednesday, January 26, 2022
Sheet 20 of 22

PI connector

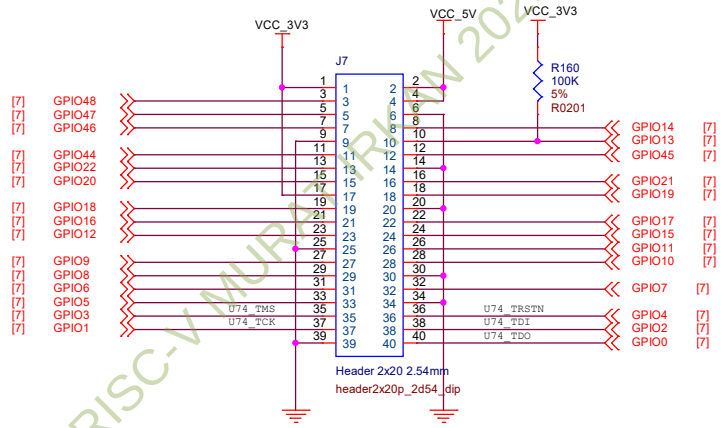

U74 JTAG 3V3 for Tag-Connect cable

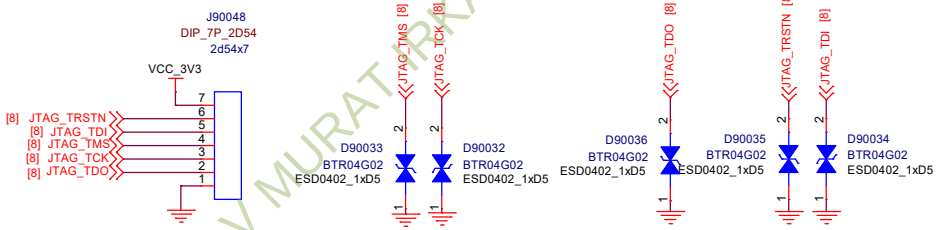

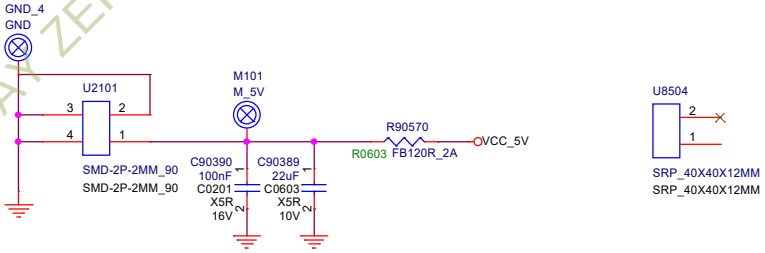

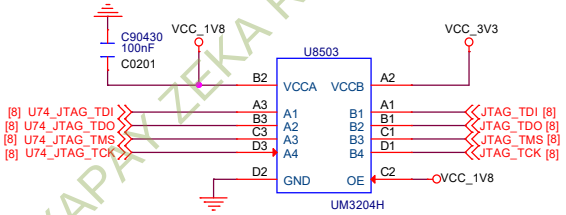

DEBUG_3V3

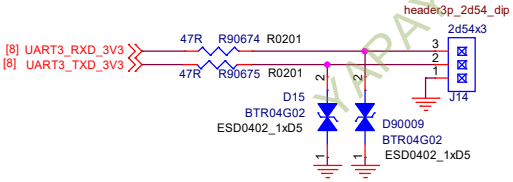

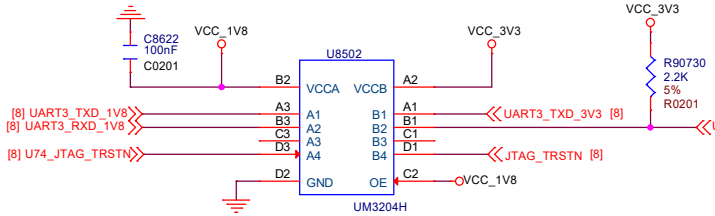

ACK&Power LEDs

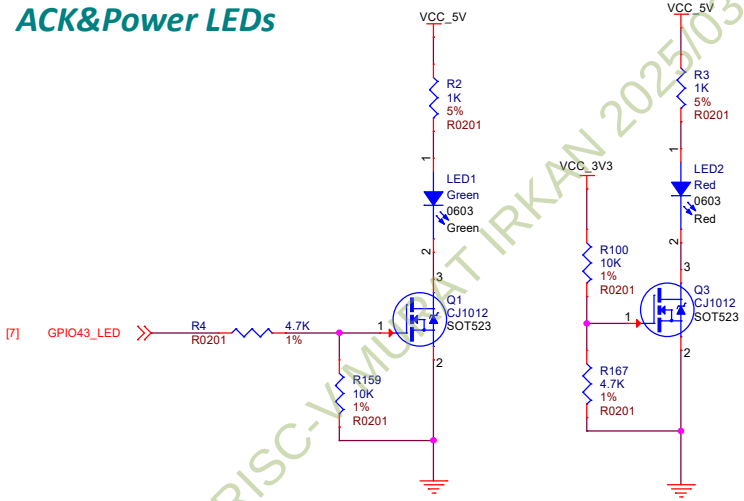

Boot from UART

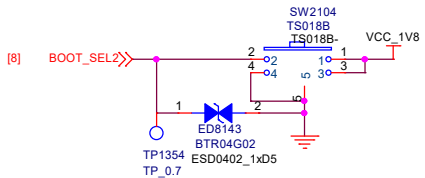

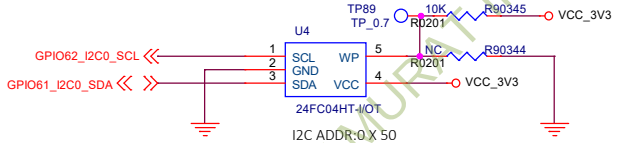

Size	Title	VisionFive v1	REV
A3	Document Number	RPI EXP CONN, LED, BUTTON	V1.0
Date:	Saturday, January 22, 2022	Sheet 21 of 22	

YAPAY ZEKA RISC-V MURAT IRKAN 2025/03 REF.A

USB Tpye-C Power

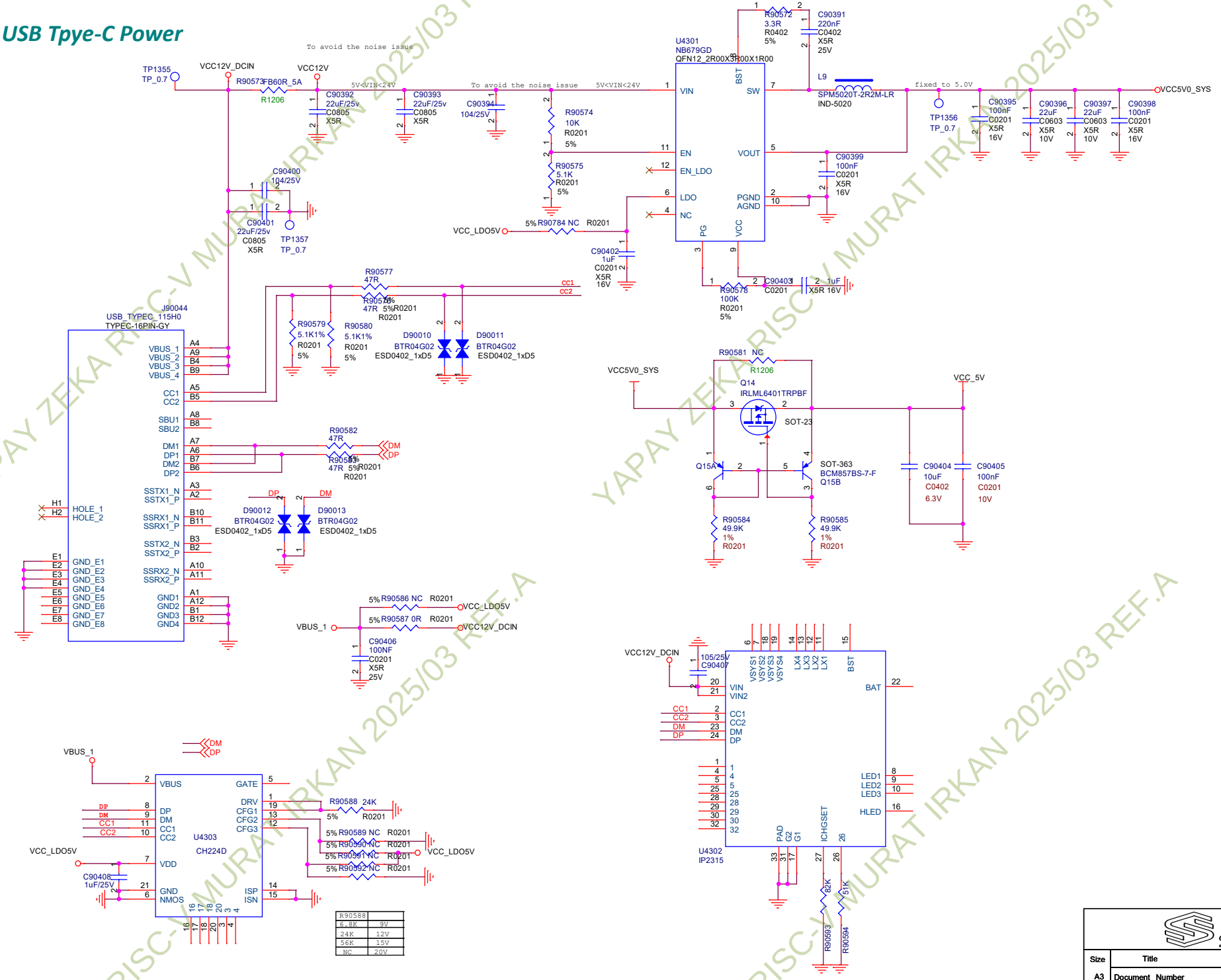

Size	Title	VisionFive v1	REV
A3	Document Number	Power-DC IN	V1.0
Date:	Wednesday, January 26, 2022	Sheet 22 of 22	

YAPAY ZEKA RISC-V MURAT IRKAN 2025/03 REF.A