Reference Schematic For RK3308B

RK3308B-V1.0

20190803

PMIC: Discrete
RAM: DDR3
ROM: eMMC/Nand/SPI Nor + TF card
Interface: ACODEC/I2S/PDM/SPDIF/LCDC/MAC

RK3308 DEBINA LINUX PC-MURAT IRKAN 2025/05

Revision History

Version	Date	Author	Change Note
V0.1	2019.05.30		First edition
V1.0			

RK3308 DEBINA LINUX PC-MURAT IRKAN 2025/05

Content Index

Page01___00.Cover Page
Page02___01.Index
Page03___02.Revision History
Page04___03.Block Diagram
Page05___04.I2C MAP
Page06___05.Moduel map
Page07___06.USB Port
Page08___07.LCM-MCU Panel
Page09___08.WIFI/BT Module-1T1R
Page10___09.10/100M PHY-RTL8201F
Page11___10.AUDIO_Headphone
Page12___11.AUDIO_PA-TT8642
Page13___12.MIC Array Connector-Digital
Page14___13.Encryption chip/RTC
Page15___14.TF Card
Page16___15.Recovery/Reset Key
Page17___16.IR Receiver/LED
Page18___17.MARK/HOLE

Note

NOTE 1:
Component parameter description

1. DNP stands for component not mounted temporarily
2. If Value or option is DNP, which means the area is reserved without being mounted
3. If Flash is compatible, please notice when eMMC is used, the option is that @eMMC is mounted, @Nand is not mounted when Nand is used, the option is that @Nand is mounted, @eMMC is not mounted

NOTE 2:
Please use our recommended components to avoid too many changes.For more informations about the second source,please refer to our AVL.

Note
Option
Description
Remind

Bill of Materials

Header:

Item\tPart\tDescription\tPCB Footprint\tReference\tQuantity\tOption

Combined property string:

{Item}\t{Value}\t{Description}\t{PCB Footprint}\t{Reference}\t{Quantity}\t{Option}

RK3308 DEBINA LINUX PC-MURAT IRKAN 2025/05

Block Diagram

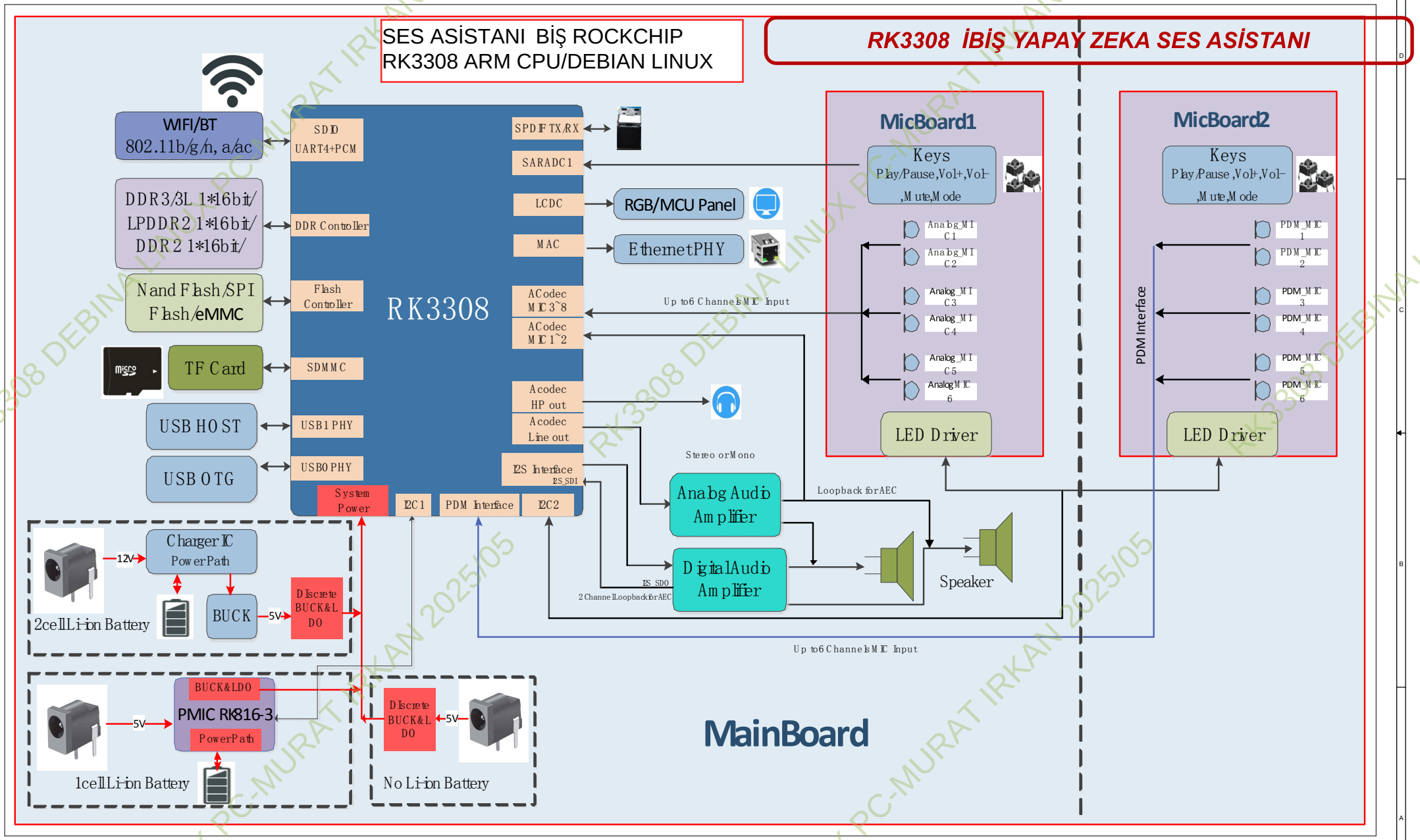

I2C MAP

Port	Pin name	Domain	Bus name	Pull-up voltage	Slave Device	Slave Addr (MS 7Bits)	Note	Slave Bus Capability
I2C0	GPIO1_D1/UART1_TX/I2C0_SCL/SPI2_CSN0 GPIO1_D0/UART1_RX/I2C0_SDA/SPI2_CLK	VCCIO1	I2C0_SCL I2C0_SDA	VCC_IO				
I2C1	GPIO0_B4/I2C1_SCL GPIO0_B3/I2C1_SDA	VCCIO0	I2C1_SCL I2C1_SDA	VCC_IO		0x1A	MIC Array Connector-Analog TT8563	
I2C2	GPIO2_A3/UART0_RTSN/SPI0_CSN0/I2C2_SCL GPIO2_A2/UART0_CTSN/SPI0_CLK/I2C2_SDA	VCCIO2	I2C2_SCL I2C2_SDA	VCC_IO				

RK3308 DEBINA LINUX PC-MURAT IRKAN 2025/05

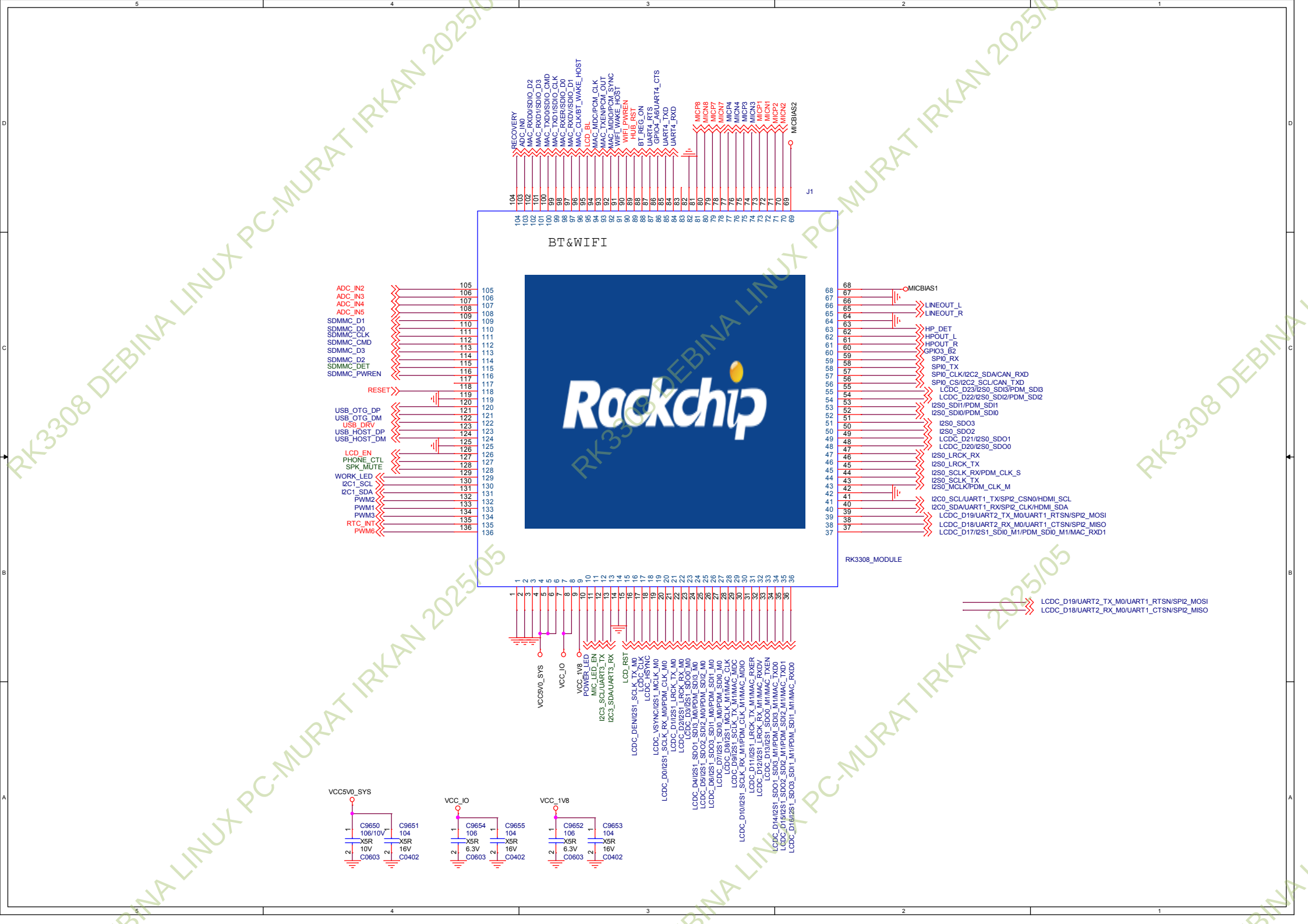
BT&WIFI
J1
RECOVERY
ADC_IN0
MAC_RXD0/SDIO_D2
MAC_RXD1/SDIO_D3
MAC_TXD0/SDIO_CMD
MAC_TXD1/SDIO_CLK
MAC_RXER/SDIO_D0
MAC_RXDV/SDIO_D1
MAC_CLK/BT_WAKE_HOST
LCD_BL
MAC_MDC/PCM_CLK
MAC_TXEN/PCM_OUT
MAC_MDIO/PCM_SYNC
WIFI_WAKE_HOST
WIFI_PWREN
HUB_RST
BT_REG_ON
UART4_RTS
GPIO4_A6/UART4_CTS
UART4_TXD
UART4_RXD
MICP8
MICN8
MICP7
MICN7
MICP4
MICN4
MICP3
MICN3
MICP1
MICN1
MICP2
MICN2
MICBIAS2
ADC_IN2
ADC_IN3
ADC_IN4
ADC_IN5
SDMMC_D1
SDMMC_D0
SDMMC_CLK
SDMMC_CMD
SDMMC_D3
SDMMC_D2
SDMMC_DET
SDMMC_PWREN
RESET
USB_OTG_DP
USB_OTG_DM
USB_DRV
USB_HOST_DP
USB_HOST_DM
LCD_EN
PHONE_CTL
SPK_MUTE
WORK_LED
I2C1_SCL
I2C1_SDA
PWM2
PWM1
PWM3
RTC_INT
PWM6
MICBIAS1
LINEOUT_L
LINEOUT_R
HP_DET
HPOUT_L
HPOUT_R
GPIO3_B2
SPI0_RX
SPI0_TX
SPI0_CLK/I2C2_SDA/CAN_RXD
SPI0_CS/I2C2_SCL/CAN_TXD
LCDC_D23/I2S0_SDI3/PDM_SDI3
LCDC_D22/I2S0_SDI2/PDM_SDI2
I2S0_SDI1/PDM_SDI1
I2S0_SDI0/PDM_SDI0
I2S0_SDO3
I2S0_SDO2
LCDC_D21/I2S0_SDO1
LCDC_D20/I2S0_SDO0
I2S0_LRCK_RX
I2S0_LRCK_TX
I2S0_SCLK_RX/PDM_CLK_S
I2S0_SCLK_TX
I2S0_MCLK/PDM_CLK_M
I2C0_SCL/UART1_TX/SPI2_CSN0/HDMI_SCL
I2C0_SDA/UART1_RX/SPI2_CLK/HDMI_SDA
LCDC_D19/UART2_TX_M0/UART1_RTSN/SPI2_MOSI
LCDC_D18/UART2_RX_M0/UART1_CTSN/SPI2_MISO
LCDC_D17/I2S1_SDI0_M1/PDM_SDI0_M1/MAC_RXD1
RK3308_MODULE
VCC5V0_SYS
VCC_IO
VCC_1V8
POWER_LED
MIC_LED_EN
I2C3_SCL/UART3_TX
I2C3_SDA/UART3_RX
LCD_RST
LCDC_DEN/I2S1_SCLK_TX_M0
LCDC_CLK
LCDC_HSYNC
LCDC_VSYNC/I2S1_MCLK_M0
LCDC_D0/I2S1_SCLK_RX_M0/PDM_CLK_M0
LCDC_D1/I2S1_LRCK_TX_M0
LCDC_D2/I2S1_LRCK_RX_M0
LCDC_D3/I2S1_SDO0_M0
LCDC_D4/I2S1_SDO1_SDI3_M0/PDM_SDI3_M0
LCDC_D5/I2S1_SDO2_SDI2_M0/PDM_SDI2_M0
LCDC_D6/I2S1_SDO3_SDI1_M0/PDM_SDI1_M0
LCDC_D7/I2S1_SDI0_M0/PDM_SDI0_M0
LCDC_D8/I2S1_MCLK_M1/MAC_CLK
LCDC_D9/I2S1_SCLK_TX_M1/MAC_MDC
LCDC_D10/I2S1_SCLK_RX_M1/PDM_CLK_M1/MAC_MDIO
LCDC_D11/I2S1_LRCK_TX_M1/MAC_RXER
LCDC_D12/I2S1_LRCK_RX_M1/MAC_RXDV
LCDC_D13/I2S1_SDO0_M1/MAC_TXEN
LCDC_D14/I2S1_SDO1_SDI3_M1/PDM_SDI3_M1/MAC_TXD0
LCDC_D15/I2S1_SDO2_SDI2_M1/PDM_SDI2_M1/MAC_TXD1
LCDC_D16/I2S1_SDO3_SDI1_M1/PDM_SDI1_M1/MAC_RXD0
VCC5V0_SYS
C9650
106/10V
X5R
10V
C0603
C9651
104
X5R
16V
C0402
VCC_IO
C9654
106
X5R
6.3V
C0603
C9655
104
X5R
16V
C0402
VCC_1V8
C9652
106
X5R
6.3V
C0603
C9653
104
X5R
16V
C0402

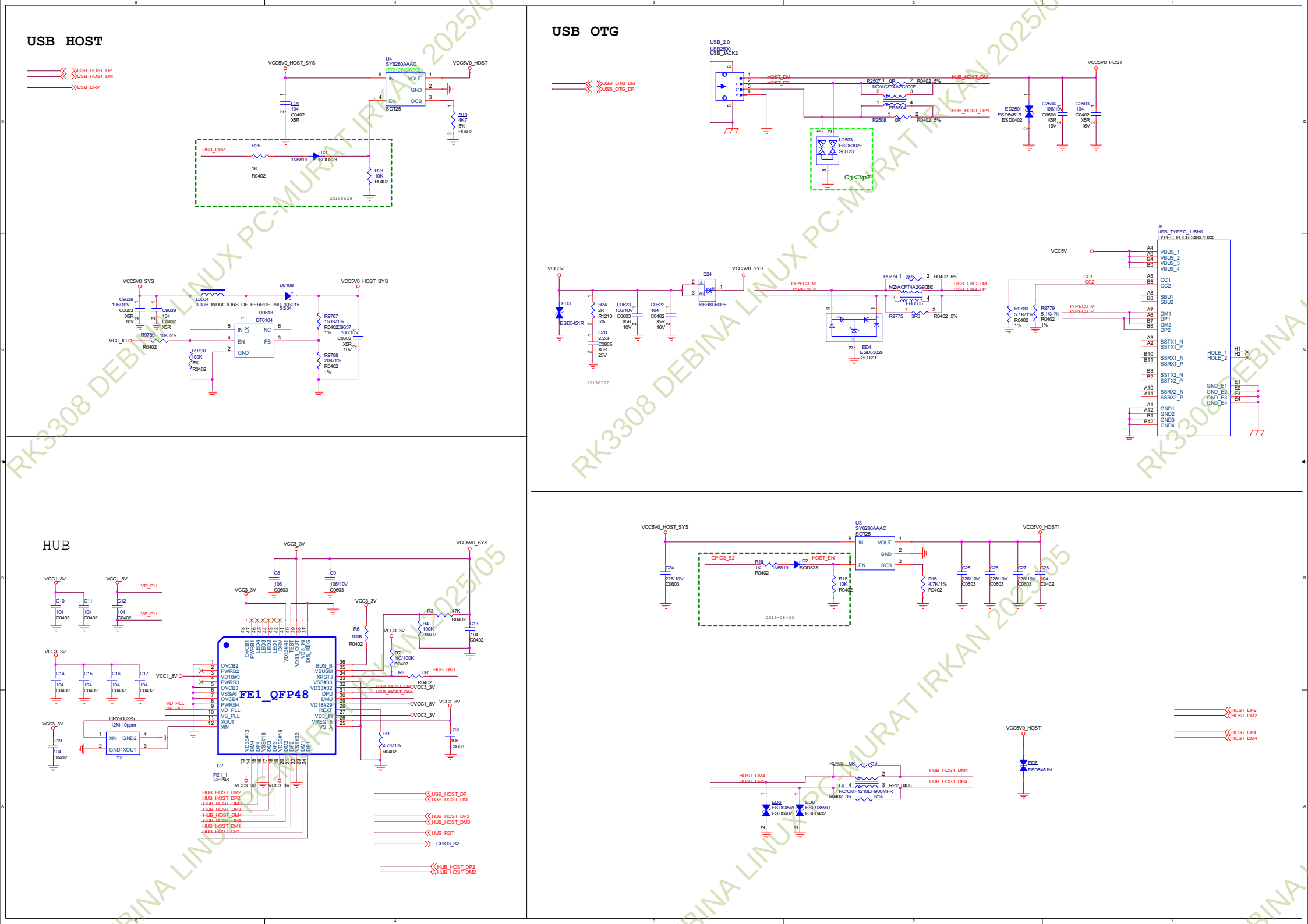
USB HOST
USB OTG
HUB
FE1_QFP48
USB_HOST_DP
USB_HOST_DM
USB_DRV
VCC5V0_HOST_SYS
VCC5V0_HOST
VCC5V0_SYS
VCC_IO
VCC3_3V
VCC1_8V
VCC5V
VCC5V0_HOST1
USB_OTG_DM
USB_OTG_DP
HUB_HOST_DM1
HUB_HOST_DP1
HUB_RST
HUB_HOST_DP2
HUB_HOST_DM2
HUB_HOST_DP3
HUB_HOST_DM3
HUB_HOST_DP4
HUB_HOST_DM4
GPIO3_B2
HOST_EN
HOST_DP2
HOST_DM2
HOST_DP4
HOST_DM4
Cj<3pF
20190528
2019-08-03
RK3308 DEBINA LINUX PC-MURAT IRKAN 2025/05

LCD Panel

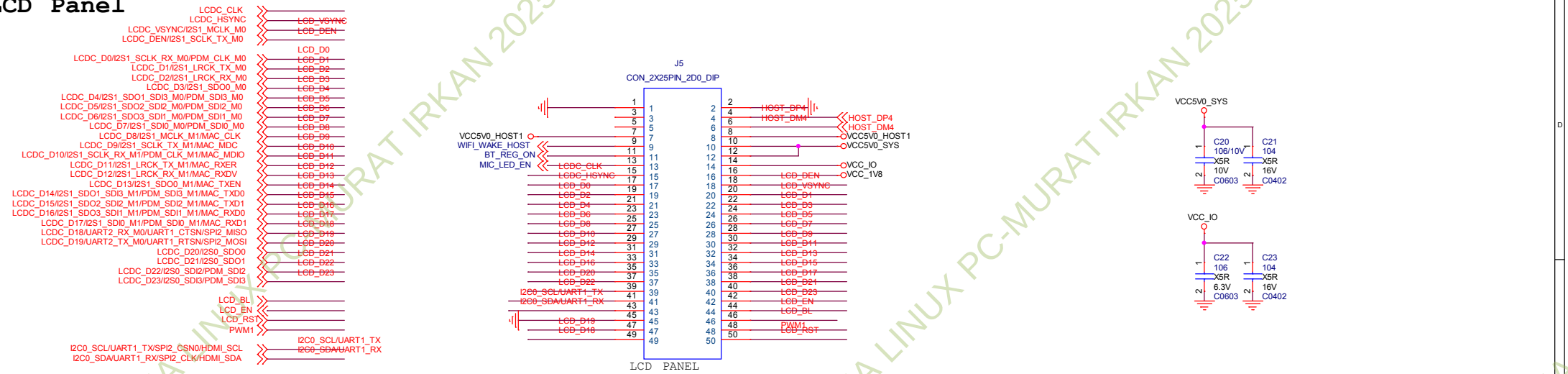

I2S/GPIO

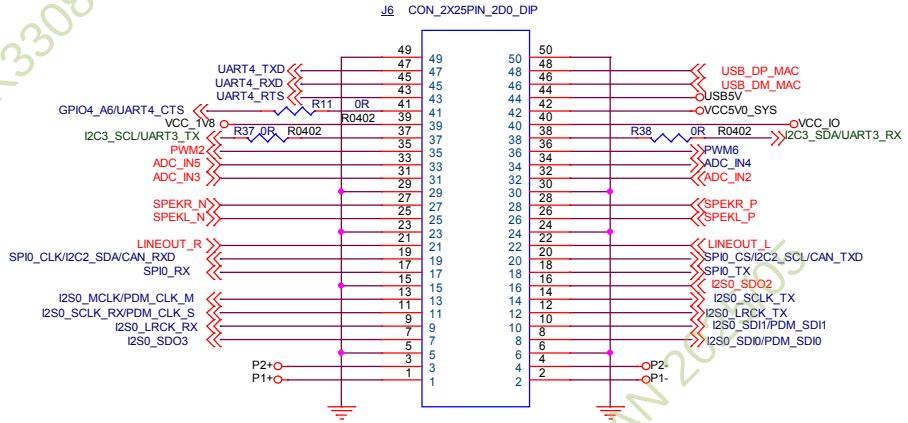

MIC Array-Digital

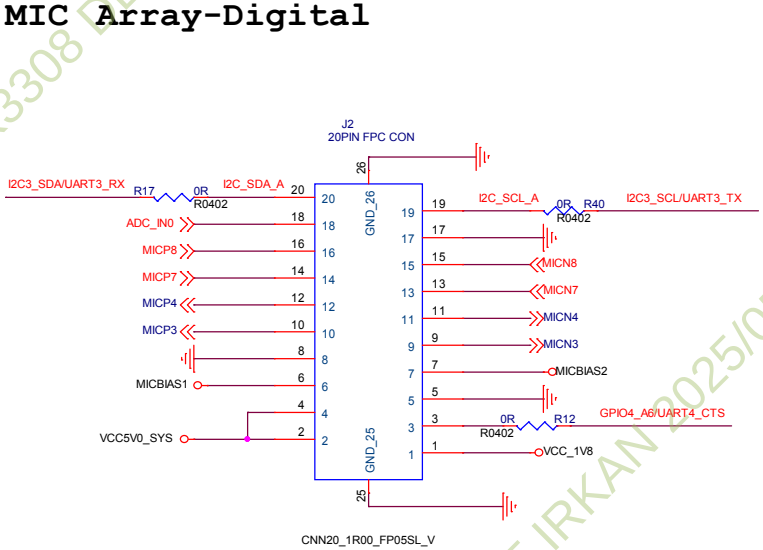

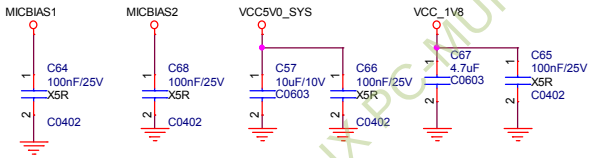

RK3308 DEBINA LINUX PC-MURAT IRKAN 2025/05

USB WIFI

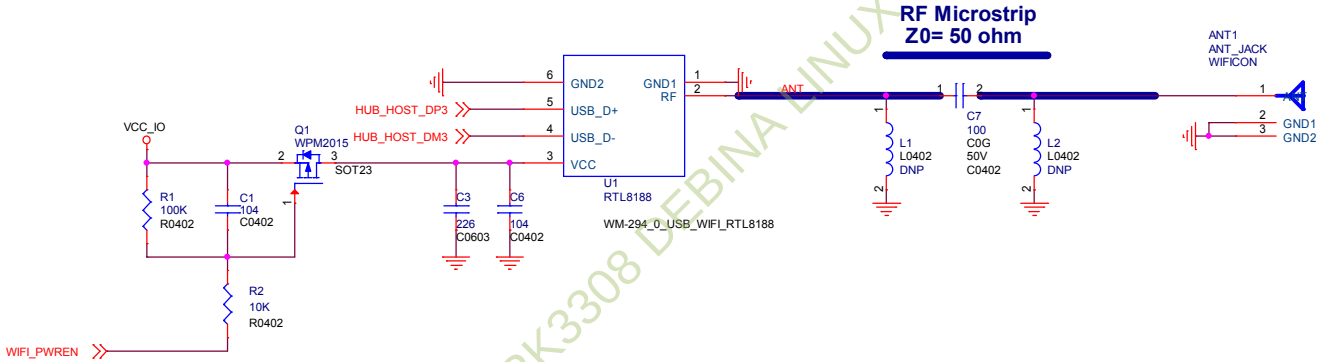

RK3308 DEBINA LINUX PC-MURAT IRKAN 2025/05

10/100M PHY-RTL8201F

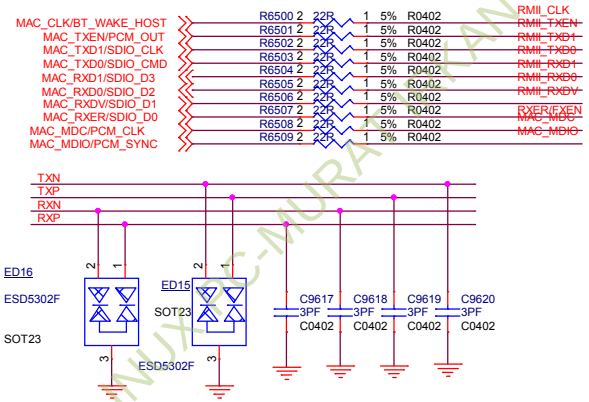

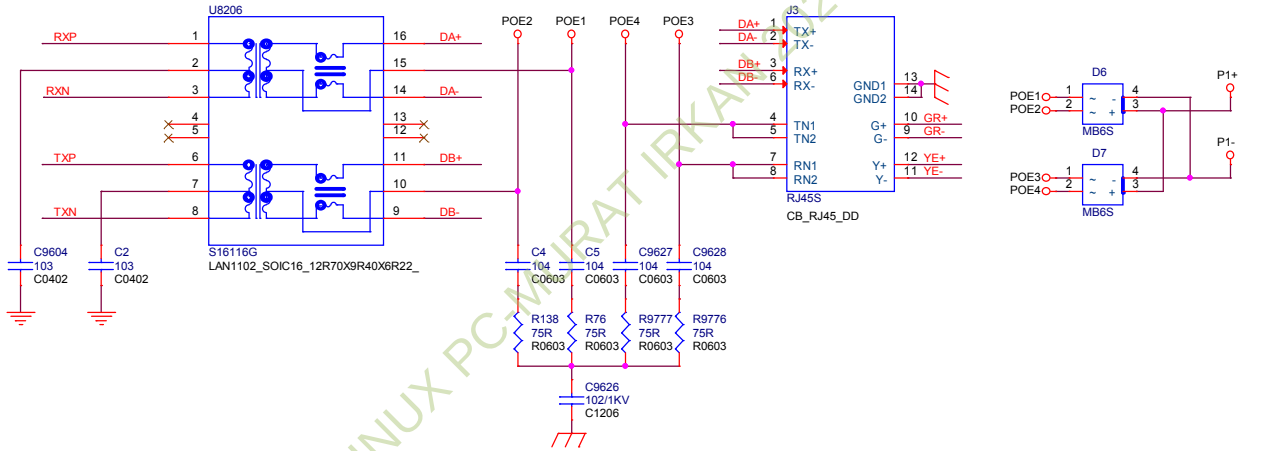

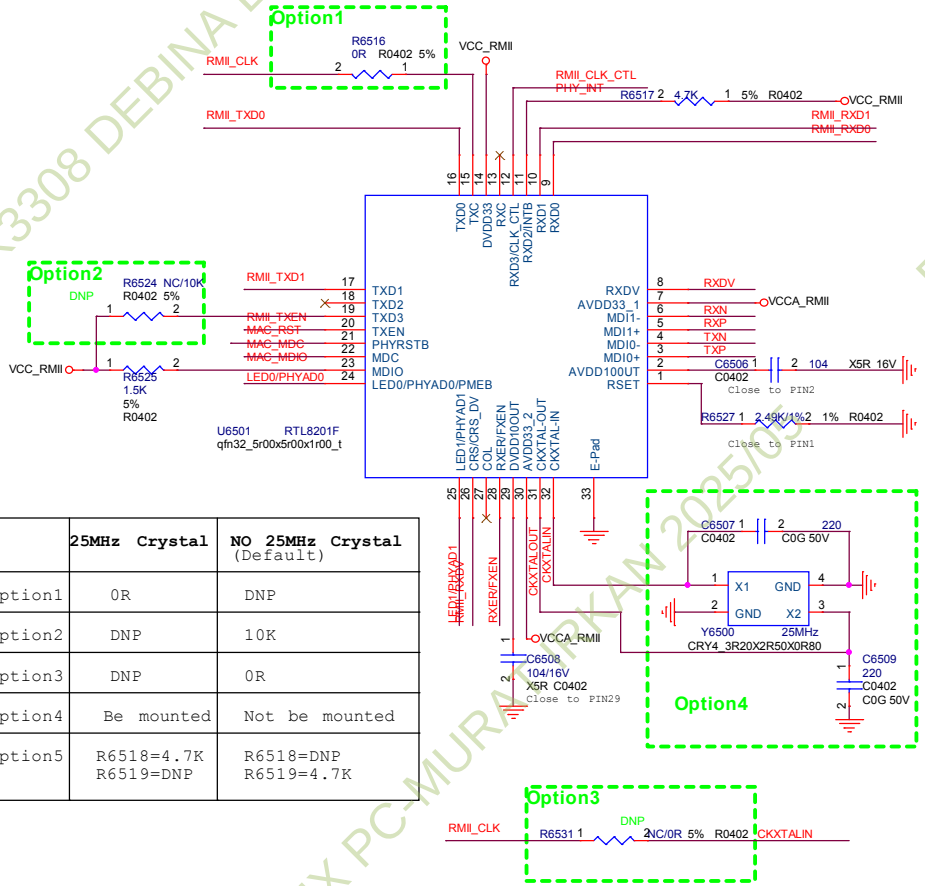

	25MHz Crystal	NO 25MHz Crystal (Default)
Option1	0R	DNP
Option2	DNP	10K
Option3	DNP	0R
Option4	Be mounted	Not be mounted
Option5	R6518=4.7K R6519=DNP	R6518=DNP R6519=4.7K

RMII REF_CLK direction

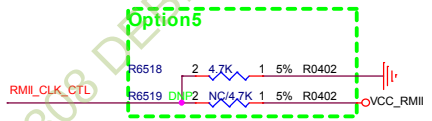

Pull Low for RMII REF_CLK Output mode
Pull High for RMII REF_CLK Input mode

PHY Address/LED

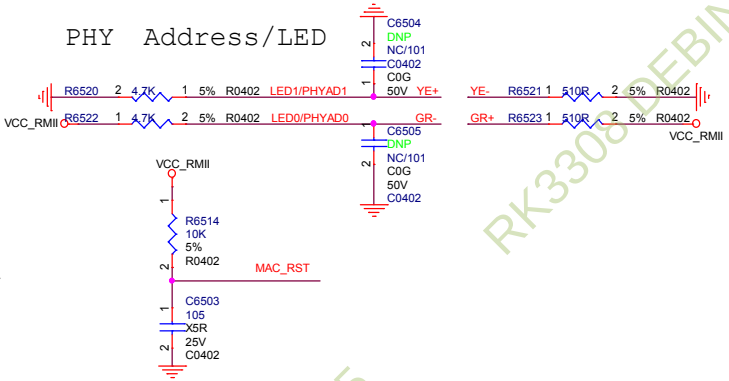

MII/RMII Selection

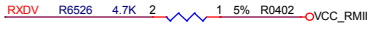

Pull High for RMII mode(default)

UTP / Fiber Selection

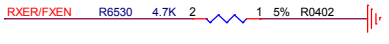

Pull Low for UTP Mode(default)
Pull High for Fiber Mode

WOL/LED0 Selection

Pull Low for LED0 Mode(default)
Pull High for WOL Mode
WOL:Wake-on-LAN

POWER

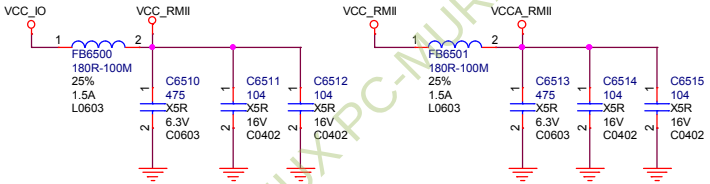

RK3308 DEBINA LINUX PC-MURAT IRKAN 2025/05

Headphone

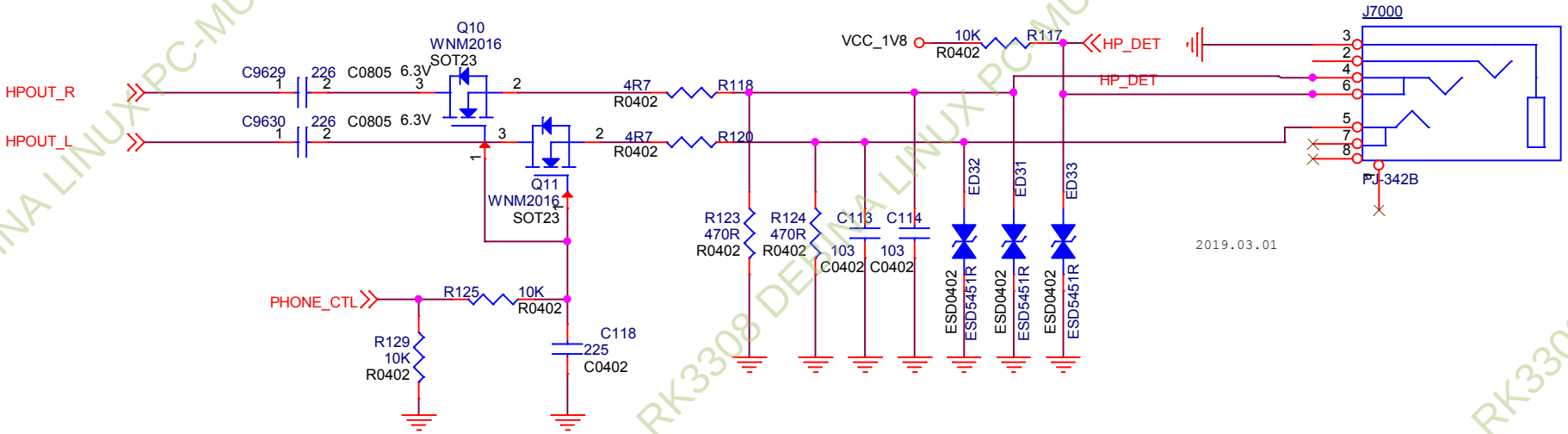

RK3308 DEBINA LINUX PC-MURAT IRKAN 2025/05

AUDIO_PowerAmp-Analog

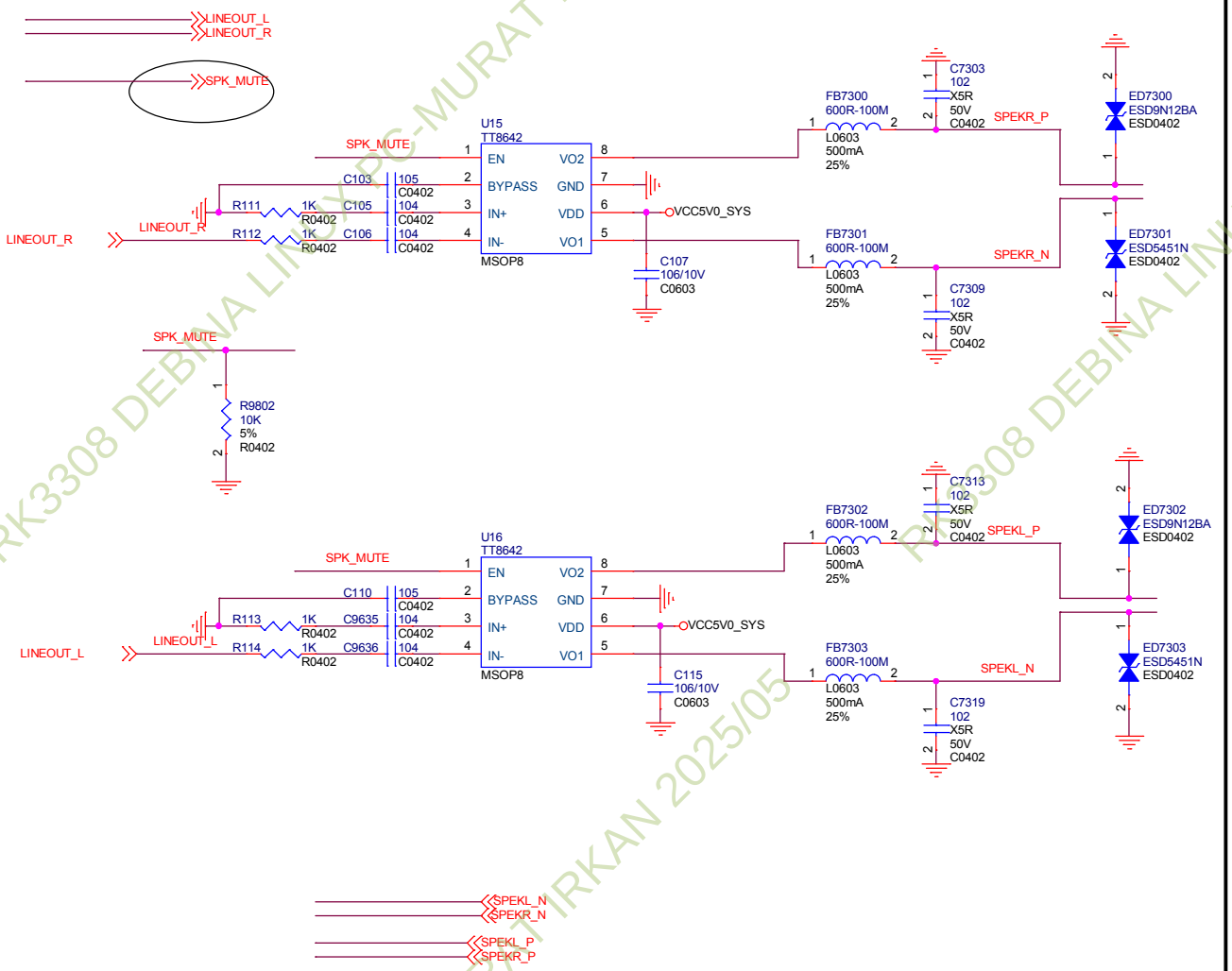

Loopback

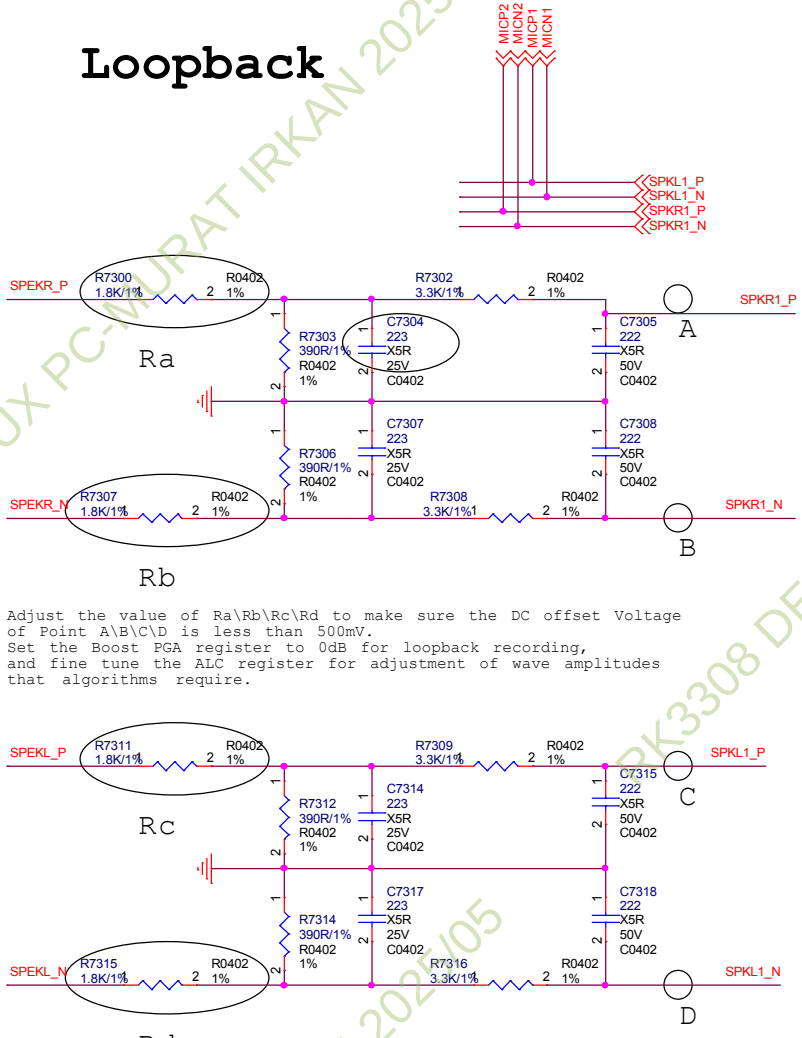

Adjust the value of Ra\Rb\Rc\Rd to make sure the DC offset Voltage of Point A\B\C\D is less than 500mV.
Set the Boost PGA register to 0dB for loopback recording, and fine tune the ALC register for adjustment of wave amplitudes that algorithms require.

RK3308 DEBINA LINUX PC-MURAT IRKAN 2025/05

Encryption chip

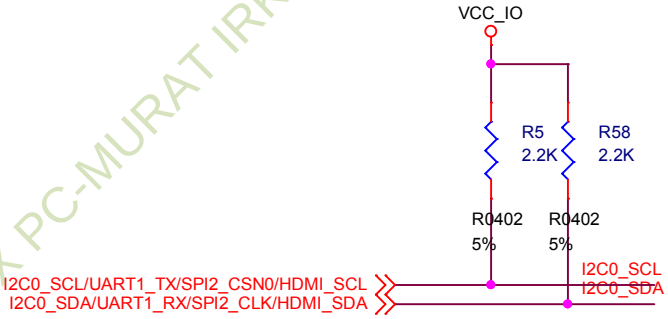

Note:
For MicArray Algorithm Use Only

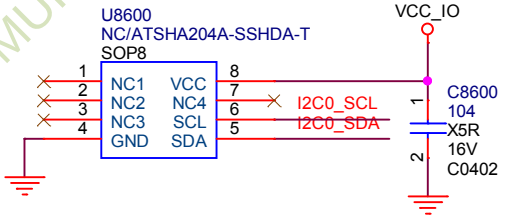

RTC

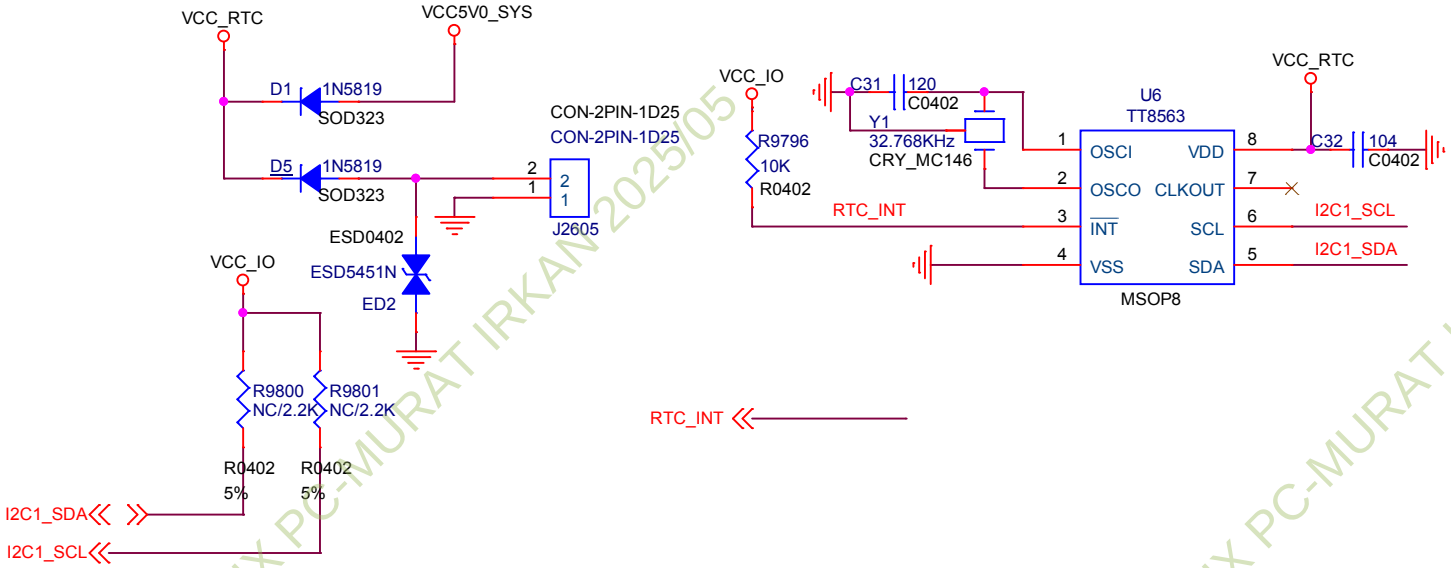

RK3308 DEBINA LINUX PC-MURAT IRKAN 2025/05

TF Card

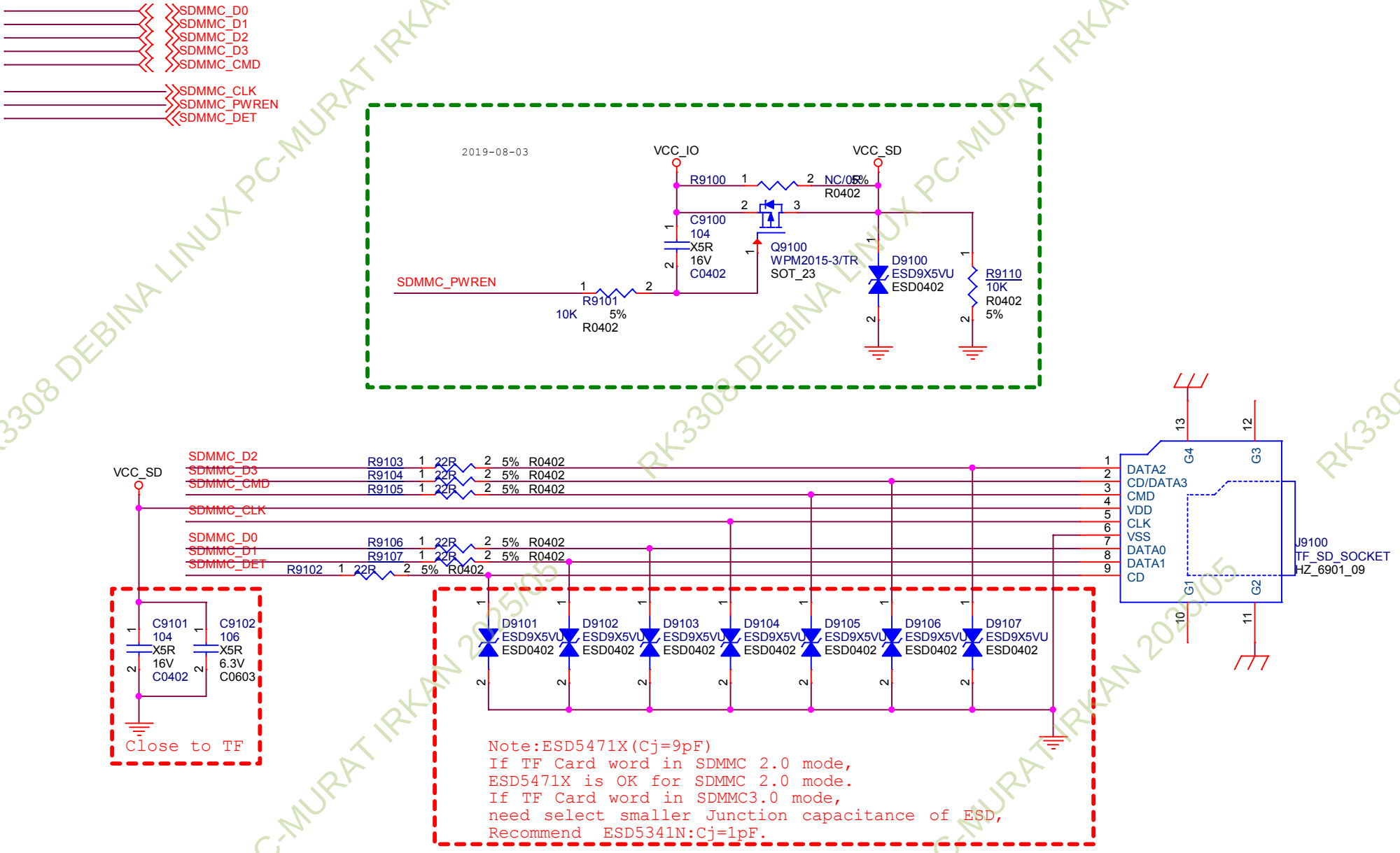

RK3308 DEBINA LINUX PC-MURAT IRKAN 2025/05

RECOVERY Key

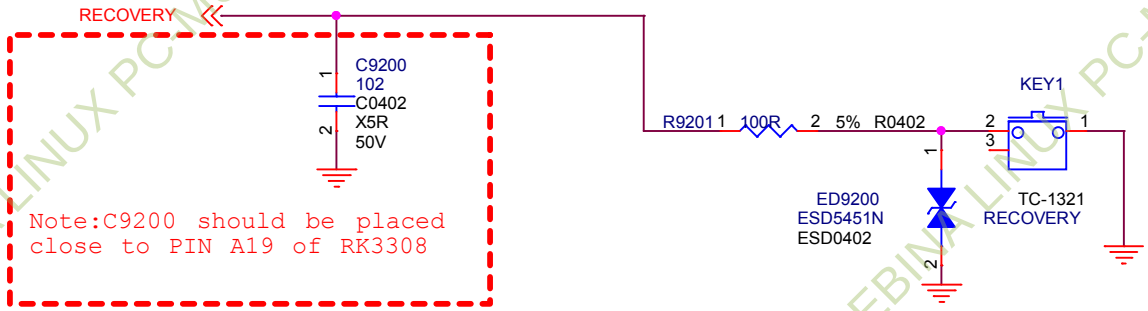

RESET Key

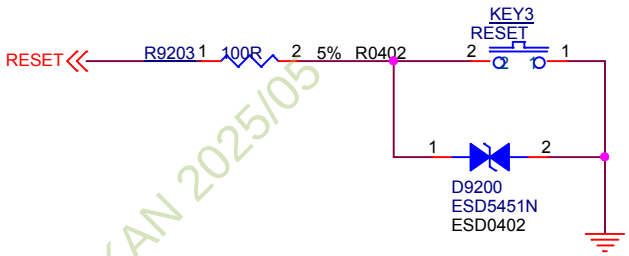

RK3308 DEBINA LINUX PC-MURAT IRKAN 2025/05

IR Receiver

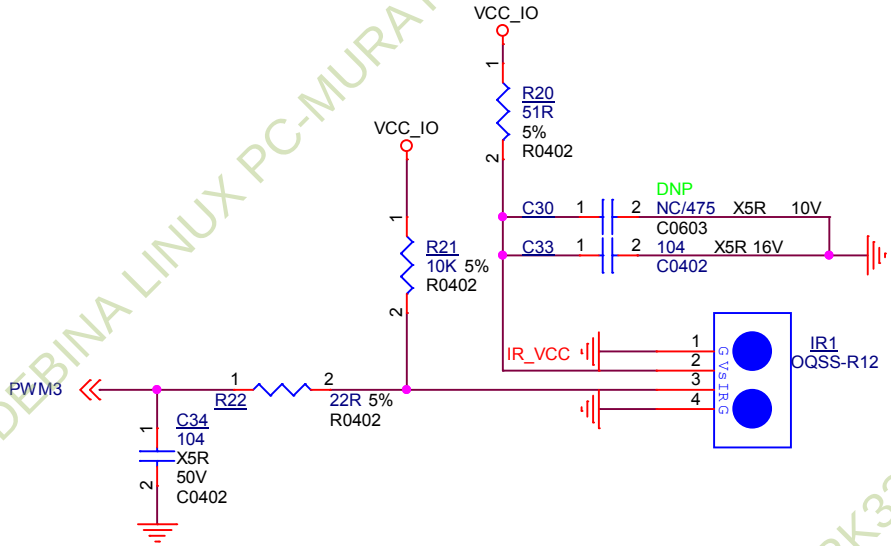

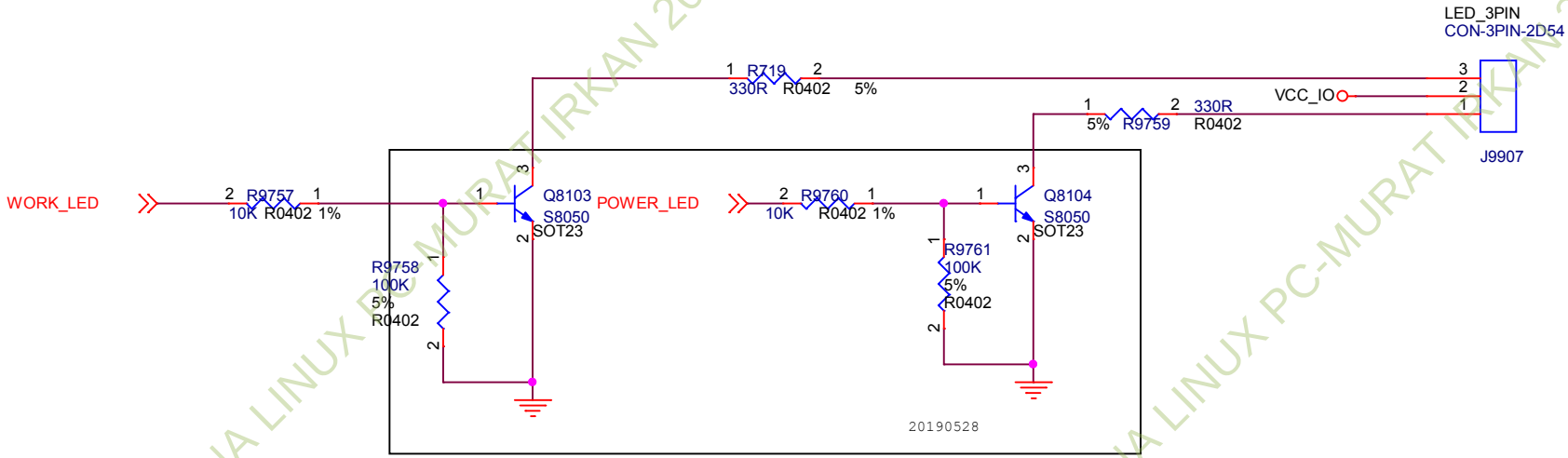

RK3308 DEBINA LINUX PC-MURAT IRKAN 2025/05

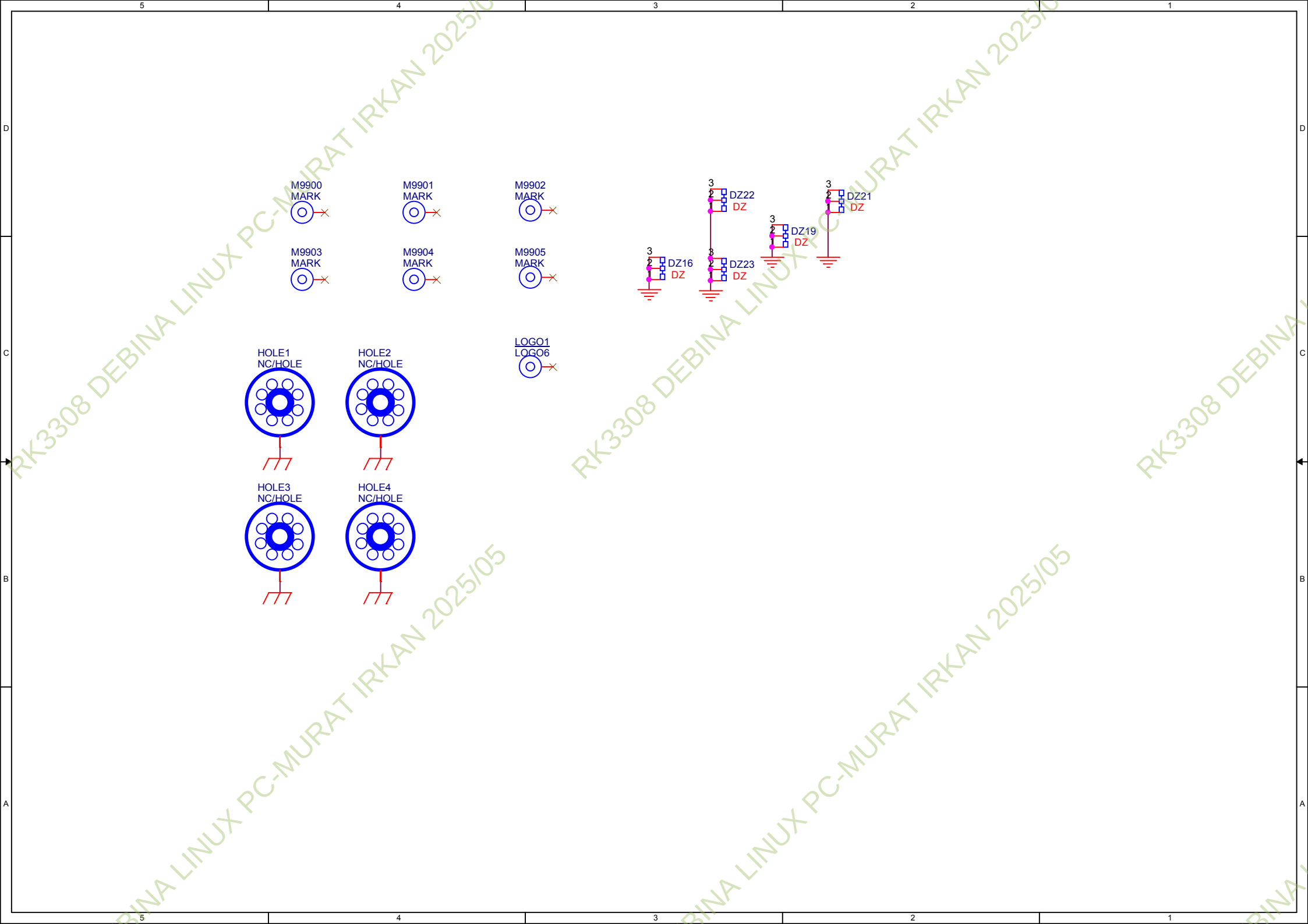

RK3308 DEBINA LINUX PC-MURAT IRKAN 2025/05

10/100M-PHY0

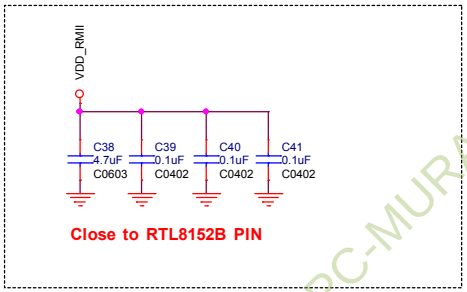

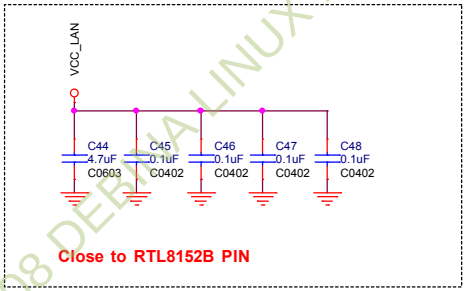

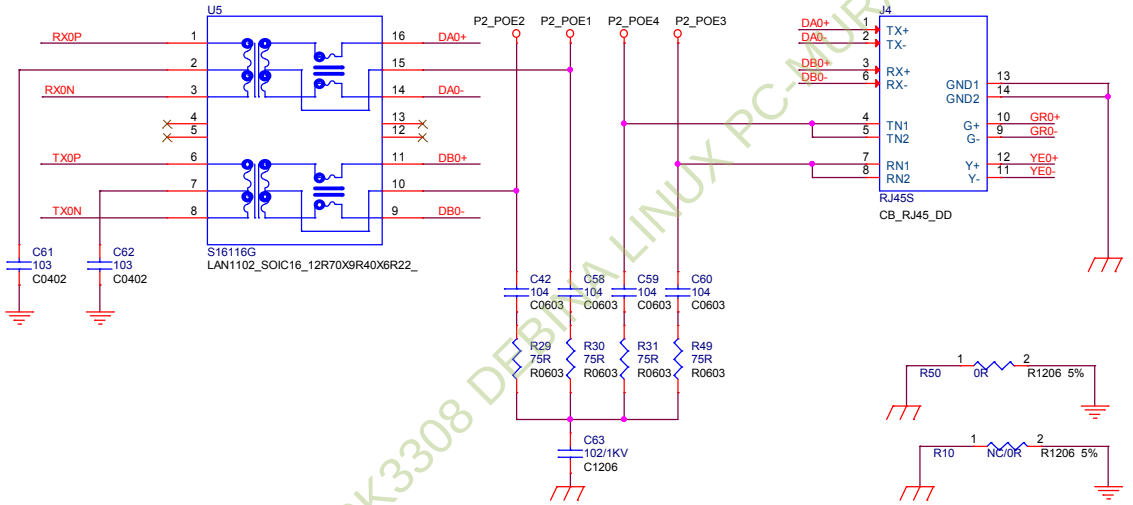

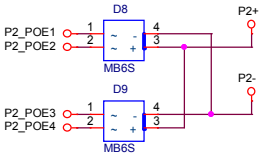

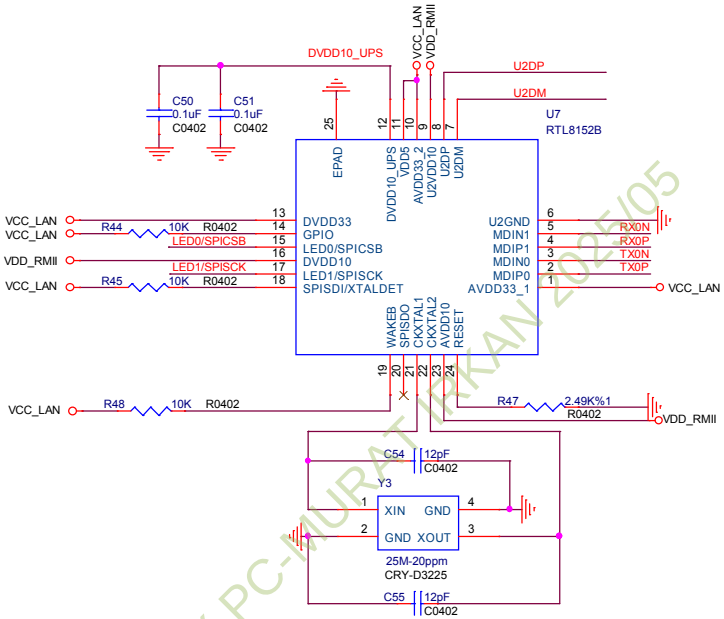

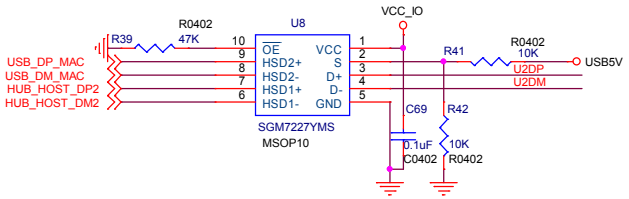

POWER

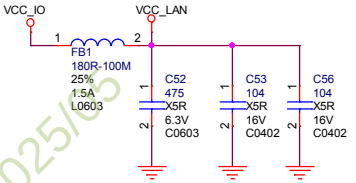

PHY Address/LED

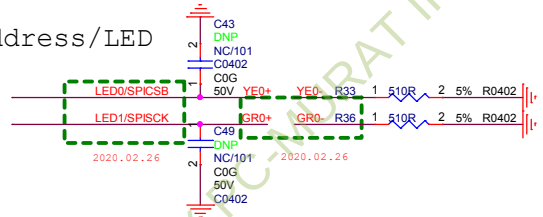

RK3308 DEBINA LINUX PC-MURAT IRKAN 2025/05