NVIDIA RTX3070

03/13/2024 04:11 PM

PG142-B00

DP + DP + DP + HDMI/DP

TABLE OF CONTENTS

Page	Description
1	Table of Contents
2	Block Diagram
3	PCI Express
4	PCIE GEN4 RC TERMINATIONS
5	MEMORY: GPU FB_AB
6	MEMORY: FBA[31:0]
7	MEMORY: FBA[63:32]
8	MEMORY: FBB[31:0]
9	MEMORY: FBB[63:32]
10	MEMORY: GPU FB_CD
11	MEMORY: FBC[31:0]
12	MEMORY: FBC[63:32]
13	MEMORY: FBD[31:0]
14	MEMORY: FBD[63:32]
15	GPU PWR & GND 1
16	GPU PWR & GND 2
17	GPU PWR & GND 3 (XVDD)
18	GPU DECOUPLING FBVDDQ
19	GPU DECOUPLING NVVDD
20	GPU DECOUPLING NVVDD
21	IO: IFPAB NC
22	IO: IFPF DP
23	IO: IFPE DP
24	IO: IFPD DP
25	IO: IFPC HDMI/DP
26	MISC1: ROM, XTAL,STRAPS
27	MISC2: JTAG,GPIO,ADC,I2C,FL,STEERO
28	MISC3: RGB
29	PS: 1V8
30	PS: 5V
31	PS: PEXVDD
32	PS: FBVDDQ
33	PS: FBVDDQ PH2
34	PS: NVVDD Controller
35	BLANK PAGE
36	PS: NVVDD PH4, PH6
37	PS: NVVDD PH1, PH3
38	PS: NVVDD PH2, PH5
39	PS: NVVDD PH9
40	PS: NVVDD PH7
41	PS: NVVDD PH10, PH8
42	PS: OVRS_INPUT POWER BALANCE
43	PS: RDT3_12V & 3V3_A Switcher
44	PS: INPUTS FILTERING and MONITORING
45	PS: PEX_12V, PEX_3V3 AND A3V3_AUX
46	PS: STEERING, UPB, HOT UNPLUG
47	SEQ: 5V, 1V8, 3V3_SEQ
48	SEQ: NVVDD, PEX, FBVDDQ ENABLE
49	SEQ: MISC
50	SEQ: VOLTAGE MONITOR
51	FAN & LED
52	PS:OVRM_PWR_SENSE
53	MECH
54	PTC

ASSEMBLY <ASSEMBLY_DESCRIPTION>
PAGE DETAIL Table of Contents

ALL NVIDIA DESIGN SPECIFICATIONS, REFERENCE SPECIFICATIONS, REFERENCE BOARDS, FILES, DRAWINGS, DIAGNOSTICS, LISTS AND OTHER DOCUMENTS OR INFORMATION (TOGETHER AND SEPARATELY, 'MATERIALS') ARE BEING PROVIDED 'AS IS'. THE MATERIALS MAY CONTAIN KNOWN AND UNKNOWN VIOLATIONS OR DEVIATIONS OF INDUSTRY STANDARDS AND SPECIFICATIONS. NVIDIA MAKES NO WARRANTIES, EXPRESSED, IMPLIED, STATUTORY OR OTHERWISE WITH RESPECT TO THE MATERIALS OR OTHERWISE, AND EXPRESSLY DISCLAIMS ALL IMPLIED WARRANTIES INCLUDING, WITHOUT LIMITATION, THE WARRANTIES OF DESIGN, OF NONINFRINGEMENT, MERCHANTABILITY OR FITNESS FOR A PARTICULAR PURPOSE, OR ARISING FROM A COURSE OF DEALING, TRADE USAGE, TRADE PRACTICE, OR INDUSTRY STANDARDS.

GIGABYTE

Title
Title Block1
Size Custom
Document Number GV-N3070AORUS M-8GD
Rev 1.0
Date: Tuesday, July 21, 2020
Sheet H 1 of 57

Page2: Block Diagram

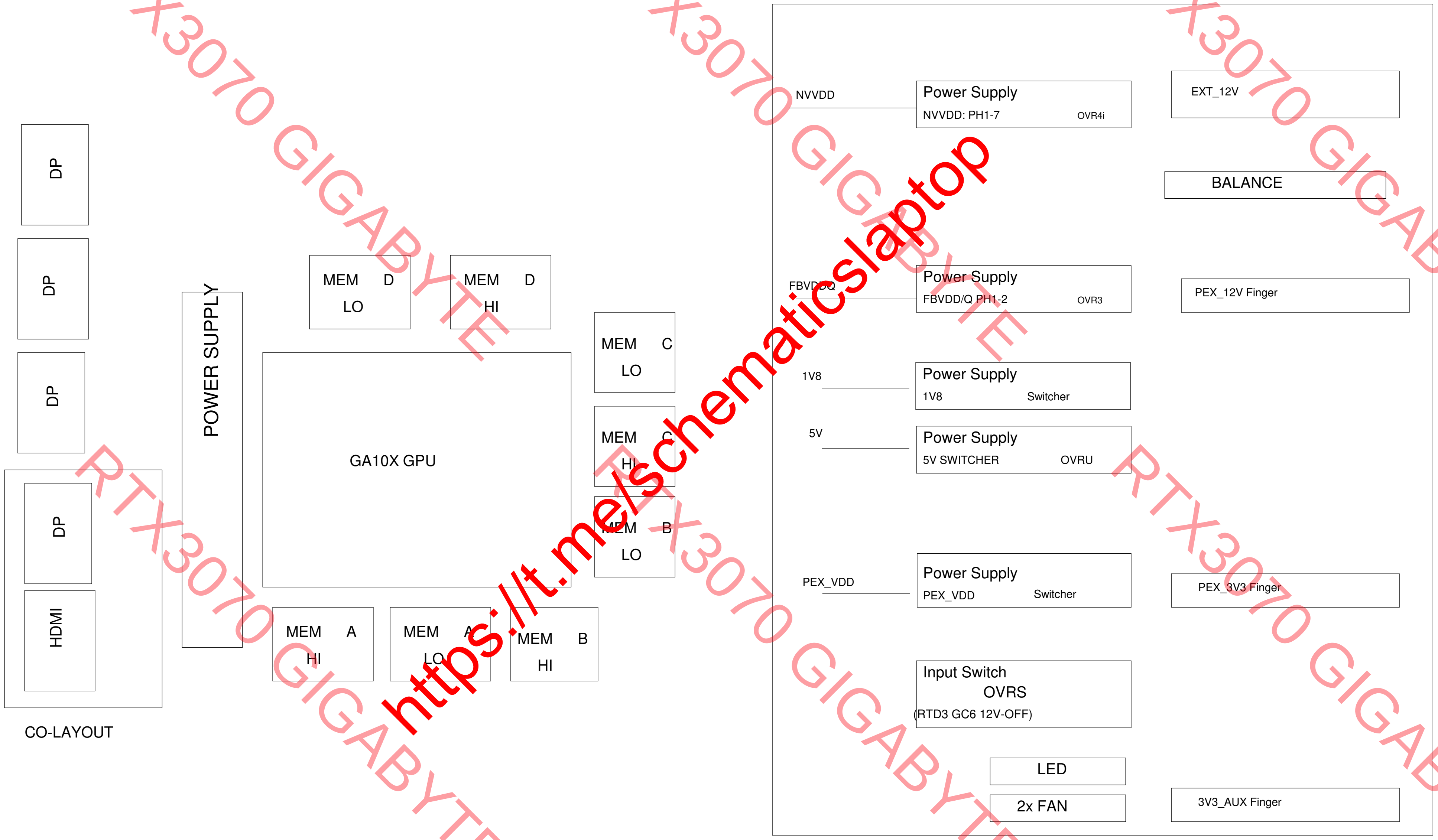
DP
DP
DP
DP
HDMI
CO-LAYOUT
POWER SUPPLY
MEM D LO
MEM D HI
MEM C LO
MEM C HI
MEM B LO
GA10X GPU
MEM A HI
MEM A LO
MEM B HI
NVVDD
Power Supply
NVVDD: PH1-7
OVR4i
EXT_12V
BALANCE
FBVDDQ
Power Supply
FBVDD/Q PH1-2
OVR3
PEX_12V Finger
1V8
Power Supply
1V8
Switcher
5V
Power Supply
5V SWITCHER
OVRU
PEX_VDD
Power Supply
PEX_VDD
Switcher
PEX_3V3 Finger
Input Switch
OVRS
(RTD3 GC6 12V-OFF)
LED
2x FAN
3V3_AUX Finger

ASSEMBLY
PAGE DETAIL

<ASSEMBLY_DESCRIPTION>
Block
Diagram

ALL NVIDIA DESIGN SPECIFICATIONS, REFERENCE SPECIFICATIONS, REFERENCE BOARDS, FILES, DRAWINGS, DIAGNOSTICS, LISTS AND OTHER DOCUMENTS OR INFORMATION (TOGETHER AND SEPARATELY, 'MATERIALS') ARE BEING PROVIDED 'AS IS'. THE MATERIALS MAY CONTAIN KNOWN AND UNKNOWN VIOLATIONS OR DEVIATIONS OF INDUSTRY STANDARDS AND SPECIFICATIONS. NVIDIA MAKES NO WARRANTIES, EXPRESSED, IMPLIED, STATUTORY OR OTHERWISE WITH RESPECT TO THE MATERIALS OR OTHERWISE, AND EXPRESSLY DISCLAIMS ALL IMPLIED WARRANTIES INCLUDING, WITHOUT LIMITATION, THE WARRANTIES OF DESIGN, OF NONINFRINGEMENT, MERCHANTABILITY OR FITNESS FOR A PARTICULAR PURPOSE, OR ARISING FROM A COURSE OF DEALING, TRADE USAGE, TRADE PRACTICE, OR INDUSTRY STANDARDS.

GIGABYTE
Title
Title Block2
Size Custom
Document Number GV-N3070AORUS M-8GD
Rev 1.0
Date: Tuesday, July 21, 2020
Sheet 2 of 57

Page3: PCI Express

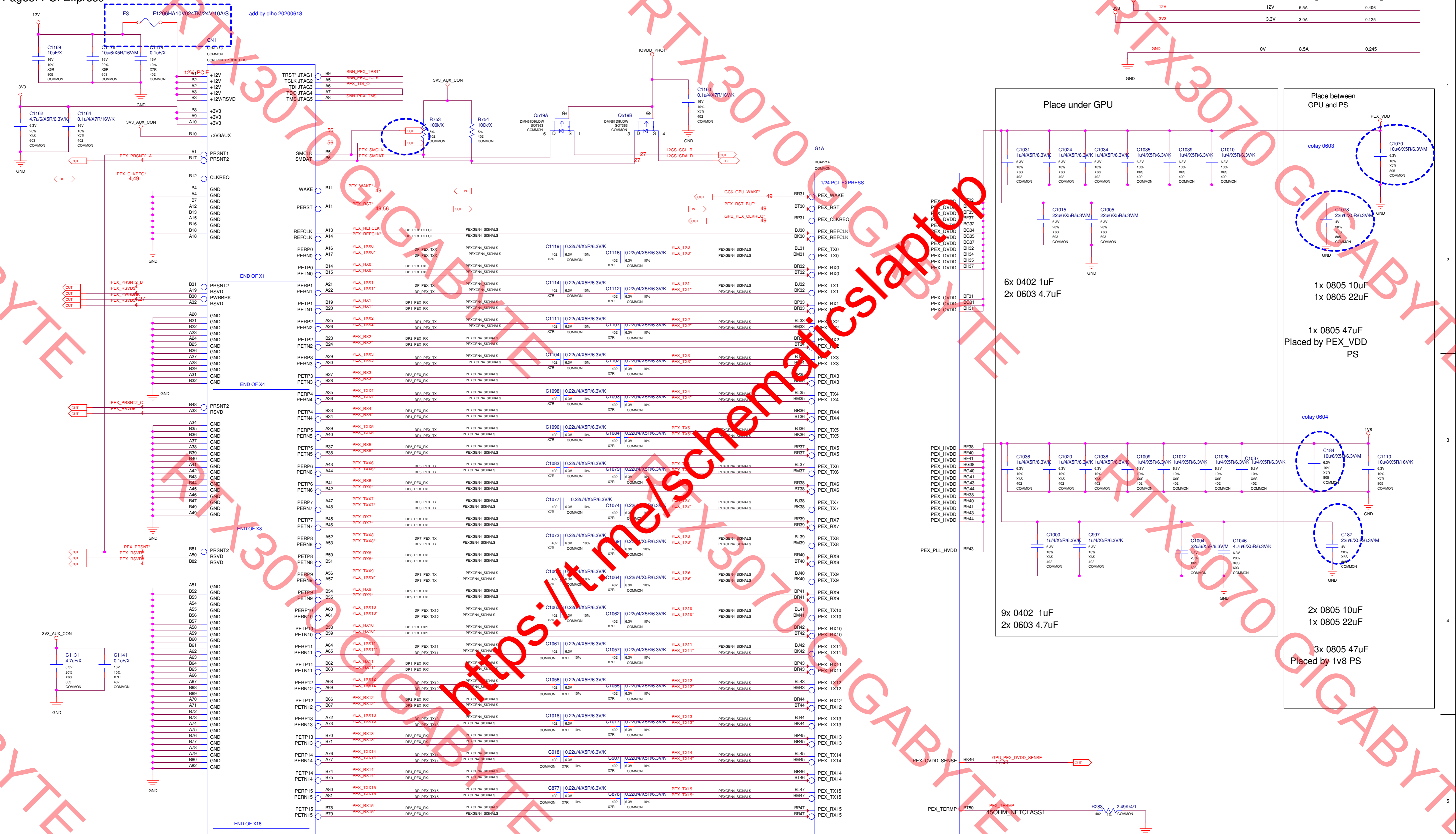
F3 F1206HA10V024TM/24V/10A/S
add by diho 20200618
12V
C1169 10uF/X
C1176 10u/6/X5R/16V/M
C1174 0.1uF/X
CN1 CON_X16 COMMON CON_PCIEXP_X16_EDGE
12V_PCIE
+12V
+12V/RSVD
+3V3
+3V3AUX
3V3
C1162 4.7u/6/X5R/6.3V/K
C1164 0.1u/4/X7R/16V/K
3V3_AUX_CON
PRSNT1
PRSNT2
PEX_PRSNT2_A
PEX_CLKREQ*
CLKREQ
GND
TRST* JTAG1
TCLK JTAG2
TDI JTAG3
TDO JTAG4
TMS JTAG5
SNN_PEX_TRST*
SNN_PEX_TCLK
PEX_TDI_O
SNN_PEX_TMS
R753 100k/X
R754 100k/X
SMCLK
SMDAT
PEX_SMCLK
PEX_SMDAT
Q519A DMN61D9UDW SOT363 COMMON
Q519B DMN61D9UDW SOT363 COMMON
IOVDD_PROT
C1160 0.1u/4/X7R/16V/K
I2CS_SCL_R
I2CS_SDA_R
WAKE
PERST
PEX_WAKE*
PEX_RST*
REFCLK
PEX_REFCLK
PEX_REFCLK*
PERP0 … PERP15
PERN0 … PERN15
PETP0 … PETP15
PETN0 … PETN15
PEX_TXX0 … PEX_TXX15
PEX_RX0 … PEX_RX15
PEXGEN4_SIGNALS
END OF X1
END OF X4
END OF X8
END OF X16
PEX_PRSNT2_B
PEX_RSVD3
PEX_PWRBRK
PEX_RSVD5
PWRBRK
RSVD
PEX_PRSNT2_C
PEX_RSVD6
PEX_PRSNT*
PEX_RSVD7
PEX_RSVD8
C1131 4.7uF/X
C1141 0.1uF/X
0.22u/4/X5R/6.3V/K
G1A BGA2714 COMMON
1/24 PCI_EXPRESS
GC6_GPU_WAKE*
PEX_RST_BUF*
GPU_PEX_CLKREQ*
PEX_WAKE
PEX_RST
PEX_CLKREQ
PEX_TX0 … PEX_TX15
PEX_DVDD
PEX_CVDD
PEX_HVDD
PEX_PLL_HVDD
PEX_CVDD_SENSE
GPU_PEX_DVDD_SENSE
PEX_TERMP
45OHM_NETCLASS1
R283 2.49K/4/1
NET
VOLTAGE
MAX_CURRENT
MIN_WIDTH
12V 12V 5.5A 0.406
3V3 3.3V 3.0A 0.125
GND 0V 8.5A 0.245
Place under GPU
C1031 C1024 C1034 C1035 C1039 C1010 1u/4/X5R/6.3V/K
C1015 22u/6/X5R/6.3V/M
C1005 22u/6/X5R/6.3V/M
6x 0402 1uF
2x 0603 4.7uF
Place between GPU and PS
PEX_VDD
colay 0603
C1070 10u/6/X5R/6.3V/M
C1078 22u/6/X5R/6.3V/M
1x 0805 10uF
1x 0805 22uF
1x 0805 47uF
Placed by PEX_VDD PS
C1036 C1020 C1038 C1009 C1012 C1026 C1037 1u/4/X5R/6.3V/K
C1000 1u/4/X5R/6.3V/K
C997 1u/4/X5R/6.3V/K
C1004 22u/6/X5R/6.3V/M
C1046 4.7u/6/X5R/6.3V/K
9x 0402 1uF
2x 0603 4.7uF
colay 0604
1V8
C184 10u/6/X5R/6.3V/M
C1110 10u/8/X5R/16V/K
C187 22u/6/X5R/6.3V/M
2x 0805 10uF
1x 0805 22uF
3x 0805 47uF
Placed by 1v8 PS

ASSEMBLY
PAGE DETAIL

<ASSEMBLY_DESCRIPTION>
PCI
Express

ALL NVIDIA DESIGN SPECIFICATIONS, REFERENCE SPECIFICATIONS, REFERENCE BOARDS, FILES, DRAWINGS, DIAGNOSTICS, LISTS AND OTHER DOCUMENTS OR INFORMATION (TOGETHER AND SEPARATELY, 'MATERIALS') ARE BEING PROVIDED 'AS IS'. THE MATERIALS MAY CONTAIN KNOWN AND UNKNOWN VIOLATIONS OR DEVIATIONS OF INDUSTRY STANDARDS AND SPECIFICATIONS. NVIDIA MAKES NO WARRANTIES, EXPRESSED, IMPLIED, STATUTORY OR OTHERWISE WITH RESPECT TO THE MATERIALS OR OTHERWISE, AND EXPRESSLY DISCLAIMS ALL IMPLIED WARRANTIES INCLUDING, WITHOUT LIMITATION, THE WARRANTIES OF DESIGN, OF NONINFRINGEMENT, MERCHANTABILITY OR FITNESS FOR A PARTICULAR PURPOSE, OR ARISING FROM A COURSE OF DEALING, TRADE USAGE, TRADE PRACTICE, OR INDUSTRY STANDARDS.

GIGABYTE

Title	PCI Express	
Size Custom	Document Number GV-N3070AORUS M-8GD	Rev 1.0
Date: Thursday, August 06, 2020	Sheet 3 of 57	

Page4: PCIE GEN4 RC TERMINATIONS

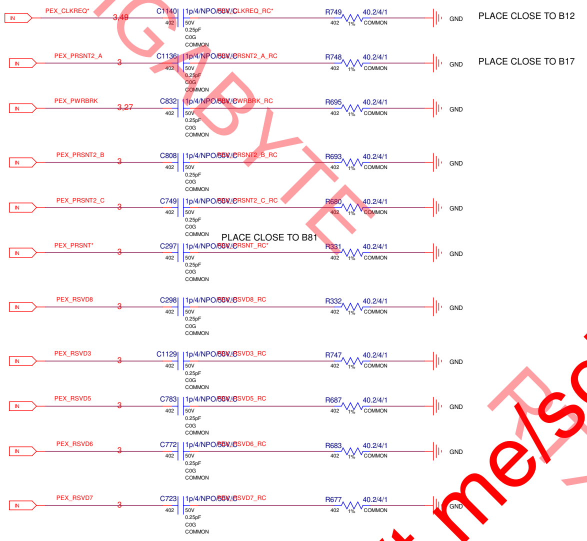
IN
PEX_CLKREQ*
3,49
C1140
402
1p/4/NPO/50V/C
50V
0.25pF
C0G
COMMON
PEX_CLKREQ_RC*
R749
402
1%
40.2/4/1
COMMON
GND
PLACE CLOSE TO B12
IN
PEX_PRSNT2_A
3
C1136
402
1p/4/NPO/50V/C
50V
0.25pF
C0G
COMMON
PEX_PRSNT2_A_RC
R748
402
1%
40.2/4/1
COMMON
GND
PLACE CLOSE TO B17
IN
PEX_PWRBRK
3,27
C832
402
1p/4/NPO/50V/C
50V
0.25pF
C0G
COMMON
PEX_PWRBRK_RC
R695
402
1%
40.2/4/1
COMMON
GND
IN
PEX_PRSNT2_B
3
C808
402
1p/4/NPO/50V/C
50V
0.25pF
C0G
COMMON
PEX_PRSNT2_B_RC
R693
402
1%
40.2/4/1
COMMON
GND
IN
PEX_PRSNT2_C
3
C749
402
1p/4/NPO/50V/C
50V
0.25pF
C0G
COMMON
PEX_PRSNT2_C_RC
R680
402
1%
40.2/4/1
COMMON
GND
PLACE CLOSE TO B81
IN
PEX_PRSNT*
3
C297
402
1p/4/NPO/50V/C
50V
0.25pF
C0G
COMMON
PEX_PRSNT_RC*
R331
402
1%
40.2/4/1
COMMON
GND
IN
PEX_RSVD8
3
C298
402
1p/4/NPO/50V/C
50V
0.25pF
C0G
COMMON
PEX_RSVD8_RC
R332
402
1%
40.2/4/1
COMMON
GND
IN
PEX_RSVD3
3
C1129
402
1p/4/NPO/50V/C
50V
0.25pF
C0G
COMMON
PEX_RSVD3_RC
R747
402
1%
40.2/4/1
COMMON
GND
IN
PEX_RSVD5
3
C783
402
1p/4/NPO/50V/C
50V
0.25pF
C0G
COMMON
PEX_RSVD5_RC
R687
402
1%
40.2/4/1
COMMON
GND
IN
PEX_RSVD6
3
C772
402
1p/4/NPO/50V/C
50V
0.25pF
C0G
COMMON
PEX_RSVD6_RC
R683
402
1%
40.2/4/1
COMMON
GND
IN
PEX_RSVD7
3
C723
402
1p/4/NPO/50V/C
50V
0.25pF
C0G
COMMON
PEX_RSVD7_RC
R677
402
1%
40.2/4/1
COMMON
GND

ASSEMBLY	<ASSEMBLY_DESCRIPTION>
PAGE DETAIL	PCIE GEN4 RC TERMINATIONS

ALL NVIDIA DESIGN SPECIFICATIONS, REFERENCE SPECIFICATIONS, REFERENCE BOARDS, FILES, DRAWINGS, DIAGNOSTICS, LISTS AND OTHER DOCUMENTS OR INFORMATION (TOGETHER AND SEPARATELY, 'MATERIALS') ARE BEING PROVIDED 'AS IS'. THE MATERIALS MAY CONTAIN KNOWN AND UNKNOWN VIOLATIONS OR DEVIATIONS OF INDUSTRY STANDARDS AND SPECIFICATIONS. NVIDIA MAKES NO WARRANTIES, EXPRESSED, IMPLIED, STATUTORY OR OTHERWISE WITH RESPECT TO THE MATERIALS OR OTHERWISE, AND EXPRESSLY DISCLAIMS ALL IMPLIED WARRANTIES INCLUDING, WITHOUT LIMITATION, THE WARRANTIES OF DESIGN, OF NONINFRINGEMENT, MERCHANTABILITY OR FITNESS FOR A PARTICULAR PURPOSE, OR ARISING FROM A COURSE OF DEALING, TRADE USAGE, TRADE PRACTICE, OR INDUSTRY STANDARDS.

GIGABYTE

Title
Page4: PCIE GEN4 RC TERMINATIONS

Size	Document Number	Rev
Custom	GV-N3070AORUS M-8GD	1.0

Date: Tuesday, August 04, 2020 Sheet 4 of 57

Page5: MEMORY: GPU Partition A/B

//syseng/Projects/GA1xx/GA1XX_CMD-Mapping.xlsx

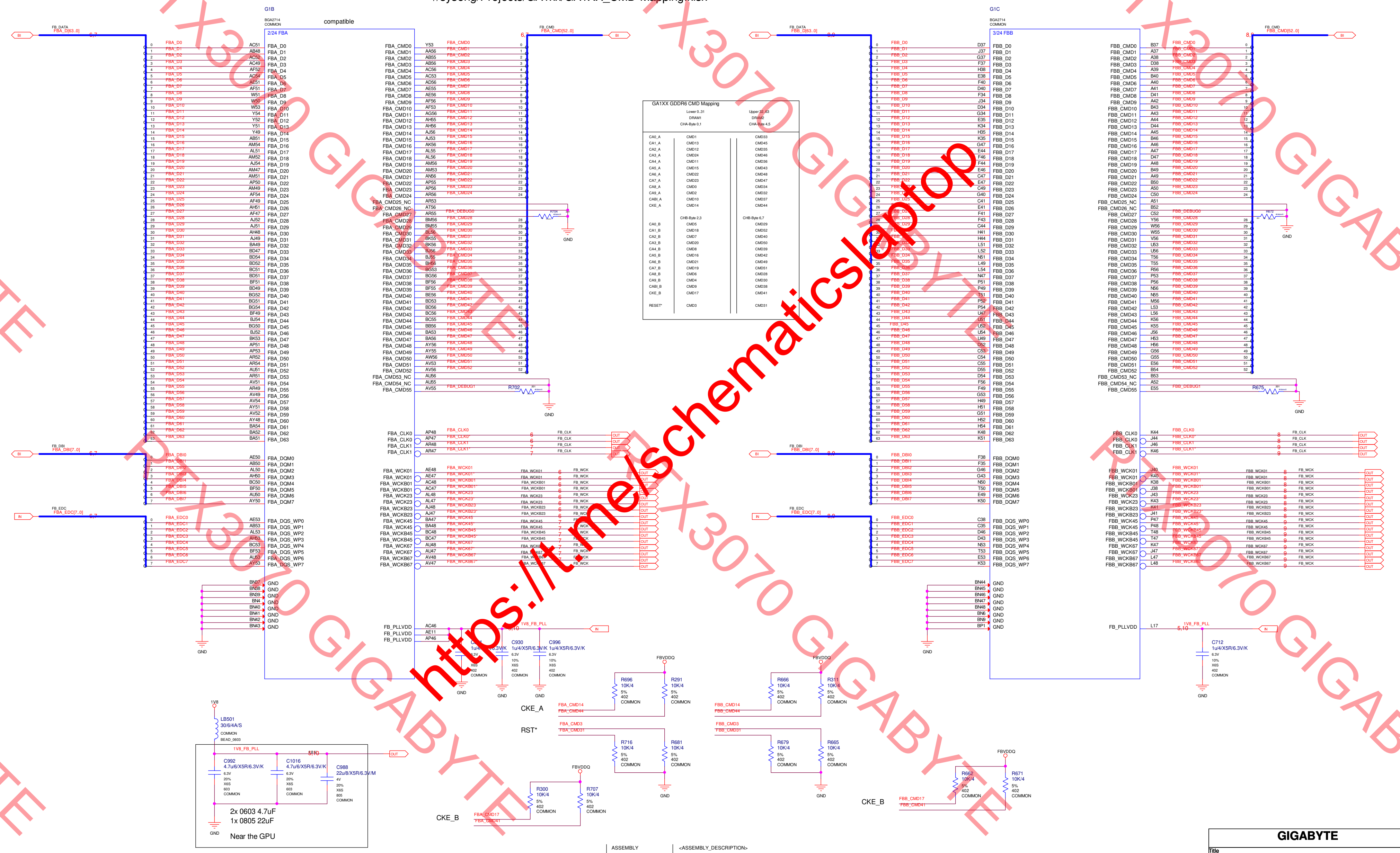

G1B
BGA2714
COMMON
compatible
2/24 FBA
FB_DATA FBA_D[63..0] 6,7 BI
FBA_D0 AC51
FBA_D1 AB48
FBA_D2 AC52
FBA_D3 AC49
FBA_D4 AF52
FBA_D5 AC54
FBA_D6 AE51
FBA_D7 AF51
FBA_D8 W51
FBA_D9 W50
FBA_D10 W53
FBA_D11 Y54
FBA_D12 Y52
FBA_D13 Y51
FBA_D14 Y49
FBA_D15 AB51
FBA_D16 AM54
FBA_D17 AL51
FBA_D18 AM52
FBA_D19 AJ54
FBA_D20 AM47
FBA_D21 AM51
FBA_D22 AP50
FBA_D23 AM49
FBA_D24 AF54
FBA_D25 AF49
FBA_D26 AH51
FBA_D27 AF47
FBA_D28 AJ52
FBA_D29 AJ51
FBA_D30 AH48
FBA_D31 AJ49
FBA_D32 BA49
FBA_D33 BD47
FBA_D34 BD54
FBA_D35 BD52
FBA_D36 BC51
FBA_D37 BD51
FBA_D38 BF51
FBA_D39 BD49
FBA_D40 BG52
FBA_D41 BG51
FBA_D42 BG54
FBA_D43 BF49
FBA_D44 BJ54
FBA_D45 BG50
FBA_D46 BJ52
FBA_D47 BK53
FBA_D48 AP51
FBA_D49 AP53
FBA_D50 AR52
FBA_D51 AR54
FBA_D52 AU51
FBA_D53 AR51
FBA_D54 AV51
FBA_D55 AR49
FBA_D56 AV49
FBA_D57 AV54
FBA_D58 AY51
FBA_D59 AV52
FBA_D60 AY48
FBA_D61 BA54
FBA_D62 BA52
FBA_D63 BA51
FB_DBI FBA_DBI[7..0] 6,7 BI
FBA_DBI0 AE50 FBA_DQM0
FBA_DBI1 AB50 FBA_DQM1
FBA_DBI2 AL50 FBA_DQM2
FBA_DBI3 AH50 FBA_DQM3
FBA_DBI4 BC50 FBA_DQM4
FBA_DBI5 BF50 FBA_DQM5
FBA_DBI6 AU50 FBA_DQM6
FBA_DBI7 AY50 FBA_DQM7
FB_EDC FBA_EDC[7..0] 6,7 IN
FBA_EDC0 AE53 FBA_DQS_WP0
FBA_EDC1 AB53 FBA_DQS_WP1
FBA_EDC2 AL53 FBA_DQS_WP2
FBA_EDC3 AH53 FBA_DQS_WP3
FBA_EDC4 BC53 FBA_DQS_WP4
FBA_EDC5 BF53 FBA_DQS_WP5
FBA_EDC6 AU53 FBA_DQS_WP6
FBA_EDC7 AY53 FBA_DQS_WP7
BN37 BN38 BN39 BN4 BN40 BN41 BN42 BN43 GND
GND
FBA_CMD0 Y53
FBA_CMD1 AA56
FBA_CMD2 AB55
FBA_CMD3 AB56
FBA_CMD4 AC56
FBA_CMD5 AC53
FBA_CMD6 AD56
FBA_CMD7 AE55
FBA_CMD8 AE56
FBA_CMD9 AF56
FBA_CMD10 AF53
FBA_CMD11 AG56
FBA_CMD12 AH55
FBA_CMD13 AH56
FBA_CMD14 AJ56
FBA_CMD15 AJ53
FBA_CMD16 AK56
FBA_CMD17 AL55
FBA_CMD18 AL56
FBA_CMD19 AM56
FBA_CMD20 AM53
FBA_CMD21 AN56
FBA_CMD22 AP55
FBA_CMD23 AP56
FBA_CMD24 AR56
FBA_CMD25_NC AR53
FBA_CMD26_NC AT56
FBA_CMD27 AR55 FBA_DEBUG0
FBA_CMD28 BM56
FBA_CMD29 BM55
FBA_CMD30 BL56
FBA_CMD31 BK55
FBA_CMD32 BK56
FBA_CMD33 BJ56
FBA_CMD34 BJ55
FBA_CMD35 BH56
FBA_CMD36 BG53
FBA_CMD37 BG56
FBA_CMD38 BF56
FBA_CMD39 BF55
FBA_CMD40 BE56
FBA_CMD41 BD53
FBA_CMD42 BD56
FBA_CMD43 BC56
FBA_CMD44 BC55
FBA_CMD45 BB56
FBA_CMD46 BA53
FBA_CMD47 BA56
FBA_CMD48 AY56
FBA_CMD49 AY55
FBA_CMD50 AW56
FBA_CMD51 AV53
FBA_CMD52 AV56
FBA_CMD53_NC AU56
FBA_CMD54_NC AU55
FBA_CMD55 AV55 FBA_DEBUG1
R704 201 49.9ohmX GND
R702 201 49.9ohmX GND
FB_CMD FBA_CMD[52..0] 6,7 BI
FBA_CLK0 AP48 6 FB_CLK OUT
FBA_CLK0* AP47 6 FB_CLK OUT
FBA_CLK1 AR48 7 FB_CLK OUT
FBA_CLK1* AR47 7 FB_CLK OUT
FBA_WCK01 AE48 6 FB_WCK OUT
FBA_WCK01* AE47 6 FB_WCK OUT
FBA_WCKB01 AC48 6 FB_WCK OUT
FBA_WCKB01* AC47 6 FB_WCK OUT
FBA_WCK23 AL48 6 FB_WCK OUT
FBA_WCK23* AL47 6 FB_WCK OUT
FBA_WCKB23 AJ48 6 FB_WCK OUT
FBA_WCKB23* AJ47 6 FB_WCK OUT
FBA_WCK45 BA47 7 FB_WCK OUT
FBA_WCK45* BA48 7 FB_WCK OUT
FBA_WCKB45 BC48 7 FB_WCK OUT
FBA_WCKB45* BC47 7 FB_WCK OUT
FBA_WCK67 AU48 7 FB_WCK OUT
FBA_WCK67* AU47 7 FB_WCK OUT
FBA_WCKB67 AV48 7 FB_WCK OUT
FBA_WCKB67* AV47 7 FB_WCK OUT
FB_PLLVDD AC46 AE11 AP46
1V8_FB_PLL 5,10 IN
C931 1u/4/X5R/6.3V/K 6.3V X6S 402 COMMON
C930 1u/4/X5R/6.3V/K 6.3V 10% X6S 402 COMMON
C996 1u/4/X5R/6.3V/K 6.3V 10% X6S 402 COMMON
GND GND GND
G1C
BGA2714
COMMON
3/24 FBB
FB_DATA FBB_D[63..0] 8,9 BI
FBB_D0 D37
FBB_D1 J37
FBB_D2 G37
FBB_D3 F37
FBB_D4 H38
FBB_D5 E38
FBB_D6 F40
FBB_D7 D40
FBB_D8 F34
FBB_D9 J34
FBB_D10 D34
FBB_D11 G34
FBB_D12 E35
FBB_D13 K34
FBB_D14 H35
FBB_D15 K35
FBB_D16 G47
FBB_D17 E44
FBB_D18 F46
FBB_D19 F44
FBB_D20 E46
FBB_D21 C47
FBB_D22 E47
FBB_D23 C49
FBB_D24 G40
FBB_D25 C41
FBB_D26 E41
FBB_D27 F41
FBB_D28 F43
FBB_D29 C44
FBB_D30 H41
FBB_D31 H44
FBB_D32 L51
FBB_D33 L52
FBB_D34 N51
FBB_D35 L49
FBB_D36 L54
FBB_D37 N47
FBB_D38 P51
FBB_D39 P49
FBB_D40 T51
FBB_D41 P52
FBB_D42 P54
FBB_D43 U47
FBB_D44 U51
FBB_D45 U52
FBB_D46 U54
FBB_D47 U49
FBB_D48 D52
FBB_D49 C53
FBB_D50 C54
FBB_D51 C55
FBB_D52 D55
FBB_D53 D54
FBB_D54 F56
FBB_D55 F49
FBB_D56 G53
FBB_D57 H49
FBB_D58 H51
FBB_D59 G51
FBB_D60 H52
FBB_D61 H54
FBB_D62 K48
FBB_D63 K51
FB_DBI FBB_DBI[7..0] 8,9 BI
FBB_DBI0 F38 FBB_DQM0
FBB_DBI1 F35 FBB_DQM1
FBB_DBI2 G46 FBB_DQM2
FBB_DBI3 G43 FBB_DQM3
FBB_DBI4 N50 FBB_DQM4
FBB_DBI5 T50 FBB_DQM5
FBB_DBI6 E49 FBB_DQM6
FBB_DBI7 K50 FBB_DQM7
FB_EDC FBB_EDC[7..0] 8,9 IN
FBB_EDC0 C38 FBB_DQS_WP0
FBB_EDC1 C35 FBB_DQS_WP1
FBB_EDC2 D46 FBB_DQS_WP2
FBB_EDC3 D43 FBB_DQS_WP3
FBB_EDC4 N53 FBB_DQS_WP4
FBB_EDC5 T53 FBB_DQS_WP5
FBB_EDC6 E53 FBB_DQS_WP6
FBB_EDC7 K53 FBB_DQS_WP7
BN44 BN45 BN46 BN47 BN48 BN6 BN9 BP1 GND
GND
FBB_CMD0 B37
FBB_CMD1 A37
FBB_CMD2 A38
FBB_CMD3 D38
FBB_CMD4 A39
FBB_CMD5 B40
FBB_CMD6 A40
FBB_CMD7 A41
FBB_CMD8 D41
FBB_CMD9 A42
FBB_CMD10 B43
FBB_CMD11 A43
FBB_CMD12 A44
FBB_CMD13 D44
FBB_CMD14 A45
FBB_CMD15 B46
FBB_CMD16 A46
FBB_CMD17 A47
FBB_CMD18 D47
FBB_CMD19 A48
FBB_CMD20 B49
FBB_CMD21 A49
FBB_CMD22 B50
FBB_CMD23 A50
FBB_CMD24 C50
FBB_CMD25_NC A51
FBB_CMD26_NC B52
FBB_CMD27 C52 FBB_DEBUG0
FBB_CMD28 Y56
FBB_CMD29 W56
FBB_CMD30 W55
FBB_CMD31 V56
FBB_CMD32 U53
FBB_CMD33 U56
FBB_CMD34 T56
FBB_CMD35 T55
FBB_CMD36 R56
FBB_CMD37 P53
FBB_CMD38 P56
FBB_CMD39 N56
FBB_CMD40 N55
FBB_CMD41 M56
FBB_CMD42 L53
FBB_CMD43 L56
FBB_CMD44 K56
FBB_CMD45 K55
FBB_CMD46 J56
FBB_CMD47 H53
FBB_CMD48 H56
FBB_CMD49 G56
FBB_CMD50 G55
FBB_CMD51 E56
FBB_CMD52 B54
FBB_CMD53_NC B53
FBB_CMD54_NC A52
FBB_CMD55 E55 FBB_DEBUG1
R672 201 49.9ohmX GND
R675 201 49.9ohmX GND
FB_CMD FBB_CMD[52..0] 8,9 BI
FBB_CLK0 K44 8 FB_CLK OUT
FBB_CLK0* J44 8 FB_CLK OUT
FBB_CLK1 J46 9 FB_CLK OUT
FBB_CLK1* K46 9 FB_CLK OUT
FBB_WCK01 J40 8 FB_WCK OUT
FBB_WCK01* K40 8 FB_WCK OUT
FBB_WCKB01 K38 8 FB_WCK OUT
FBB_WCKB01* J38 8 FB_WCK OUT
FBB_WCK23 J43 8 FB_WCK OUT
FBB_WCK23* K43 8 FB_WCK OUT
FBB_WCKB23 K41 8 FB_WCK OUT
FBB_WCKB23* J41 8 FB_WCK OUT
FBB_WCK45 P47 9 FB_WCK OUT
FBB_WCK45* P48 9 FB_WCK OUT
FBB_WCKB45 T48 9 FB_WCK OUT
FBB_WCKB45* T47 9 FB_WCK OUT
FBB_WCK67 K47 9 FB_WCK OUT
FBB_WCK67* J47 9 FB_WCK OUT
FBB_WCKB67 L47 9 FB_WCK OUT
FBB_WCKB67* L48 9 FB_WCK OUT
FB_PLLVDD L17
1V8_FB_PLL 5,10 IN
C712 1u/4/X5R/6.3V/K 6.3V 10% X6S 402 COMMON
GND
FBVDDQ
R696 10K/4 5% 402 COMMON
R291 10K/4 5% 402 COMMON
CKE_A
FBA_CMD14
FBA_CMD44
RST*
FBA_CMD3
FBA_CMD31
R716 10K/4 5% 402 COMMON
R681 10K/4 5% 402 COMMON
GND
FBVDDQ
R300 10K/4 5% 402 COMMON
R707 10K/4 5% 402 COMMON
CKE_B
FBA_CMD17
FBA_CMD41
FBVDDQ
R666 10K/4 5% 402 COMMON
R311 10K/4 5% 402 COMMON
FBB_CMD14
FBB_CMD44
FBB_CMD3
FBB_CMD31
R679 10K/4 5% 402 COMMON
R665 10K/4 5% 402 COMMON
GND
FBVDDQ
R662 10K/4 5% 402 COMMON
R671 10K/4 5% 402 COMMON
CKE_B
FBB_CMD17
FBB_CMD41
1V8
LB501 30/6/4A/S COMMON BEAD_0603
1V8_FB_PLL 5,10 OUT
C992 4.7u/6/X5R/6.3V/K 6.3V 20% X6S 603 COMMON
C1016 4.7u/6/X5R/6.3V/K 6.3V 20% X6S 603 COMMON
C988 22u/8/X5R/6.3V/M 4V 20% X6S 805 COMMON
GND
2x 0603 4.7uF
1x 0805 22uF
Near the GPU

GA1XX GDDR6 CMD Mapping

	Lower 0..31 DRAM1 CHA-Byte 0,1	Upper 32..63 DRAM2 CHA-Byte 4,5
CA0_A	CMD1	CMD33
CA1_A	CMD13	CMD45
CA2_A	CMD12	CMD35
CA3_A	CMD24	CMD46
CA4_A	CMD11	CMD36
CA5_A	CMD15	CMD43
CA6_A	CMD22	CMD48
CA7_A	CMD23	CMD47
CA8_A	CMD0	CMD34
CA9_A	CMD2	CMD32
CABI_A	CMD10	CMD37
CKE_A	CMD14	CMD44
	CHB-Byte 2,3	CHB-Byte 6,7
CA0_B	CMD5	CMD29
CA1_B	CMD18	CMD52
CA2_B	CMD7	CMD40
CA3_B	CMD20	CMD50
CA4_B	CMD8	CMD39
CA5_B	CMD16	CMD42
CA6_B	CMD21	CMD49
CA7_B	CMD19	CMD51
CA8_B	CMD6	CMD28
CA9_B	CMD4	CMD30
CABI_B	CMD9	CMD38
CKE_B	CMD17	CMD41
RESET*	CMD3	CMD31

ASSEMBLY <ASSEMBLY_DESCRIPTION>
PAGE DETAIL MEMORY: GPU FB_AB

ALL NVIDIA DESIGN SPECIFICATIONS, REFERENCE SPECIFICATIONS, REFERENCE BOARDS, FILES, DRAWINGS, DIAGNOSTICS, LISTS AND OTHER DOCUMENTS OR INFORMATION (TOGETHER AND SEPARATELY, 'MATERIALS') ARE BEING PROVIDED 'AS IS'. THE MATERIALS MAY CONTAIN KNOWN AND UNKNOWN VIOLATIONS OR DEVIATIONS OF INDUSTRY STANDARDS AND SPECIFICATIONS. NVIDIA MAKES NO WARRANTIES, EXPRESSED, IMPLIED, STATUTORY OR OTHERWISE WITH RESPECT TO THE MATERIALS OR OTHERWISE, AND EXPRESSLY DISCLAIMS ALL IMPLIED WARRANTIES INCLUDING, WITHOUT LIMITATION, THE WARRANTIES OF DESIGN, OF NONINFRINGEMENT, MERCHANTABILITY OR FITNESS FOR A PARTICULAR PURPOSE, OR ARISING FROM A COURSE OF DEALING, TRADE USAGE, TRADE PRACTICE, OR INDUSTRY STANDARDS.

GIGABYTE

Title
Page5: MEMORY: GPU Partition A/B

Size Custom
Document Number GV-N3070AORUS M-8GD
Rev 1.0

Date: Thursday, August 06, 2020 Sheet 5 of 57

Page6: MEMORY: FBA Partition 31..0

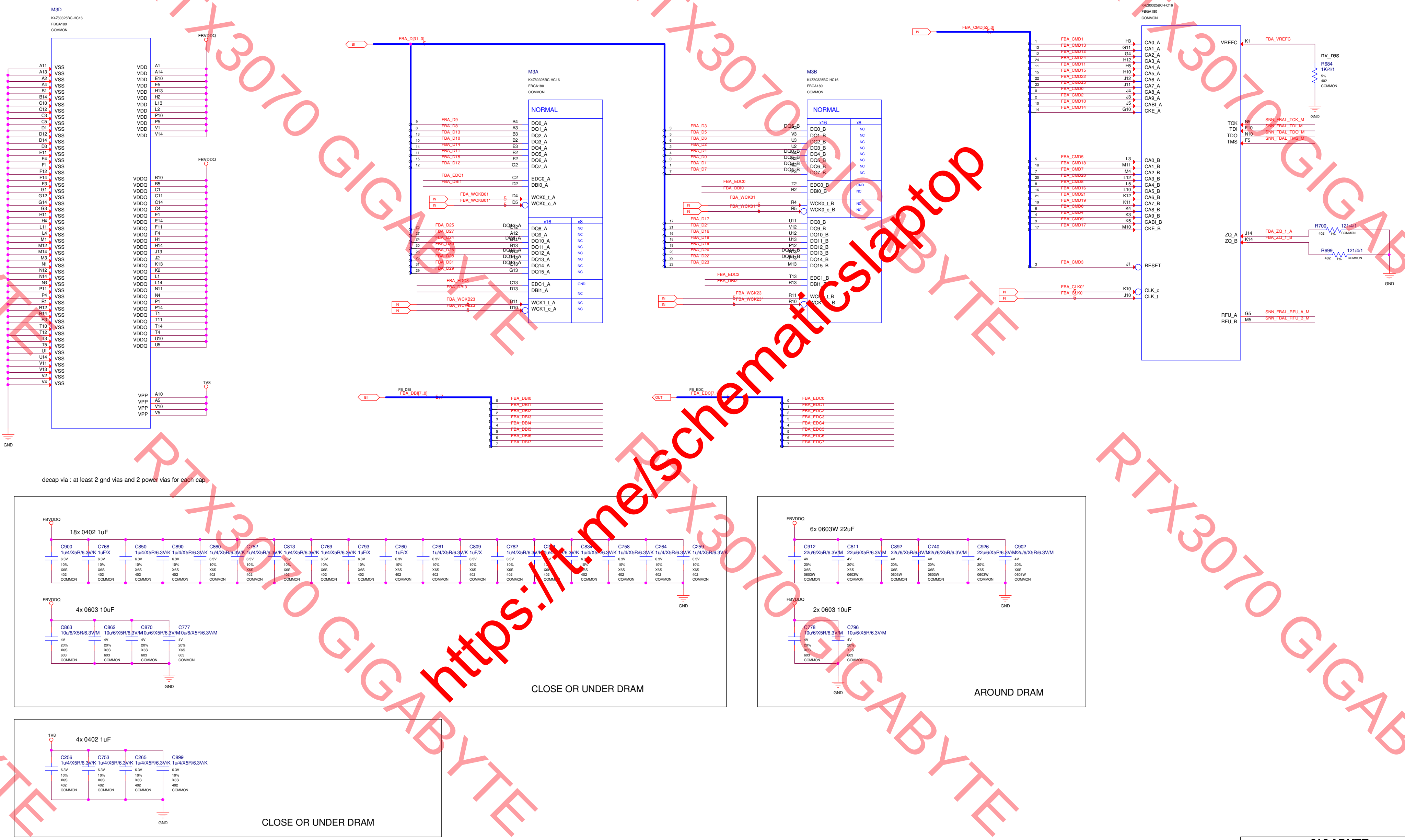

M3D
K4Z80325BC-HC16
FBGA180
COMMON
VSS: A11 A13 A2 A4 B1 B14 C10 C12 C3 C5 D1 D12 D14 D3 E11 E4 F1 F12 F14 F3 G1 G12 G14 G3 H11 H4 L11 L4 M1 M12 M14 M3 N1 N12 N14 N3 P11 P4 R1 R12 R14 R3 T10 T12 T3 T5 U1 U14 V11 V13 V2 V4
GND
FBVDDQ
VDD: A1 A14 E10 E5 H13 H2 L13 L2 P10 P5 V1 V14
FBVDDQ
VDDQ: B10 B5 C1 C11 C14 C4 E1 E14 F11 F4 H1 H14 J13 J2 K13 K2 L1 L14 N11 N4 P1 P14 T1 T11 T14 T4 U10 U5
1V8
VPP: A10 A5 V10 V5
BI
FBA_D[31..0]
5
M3A
K4Z80325BC-HC16
FBGA180
COMMON
NORMAL
9 FBA_D9 B4 DQ0_A
8 FBA_D8 A3 DQ1_A
13 FBA_D13 B3 DQ2_A
10 FBA_D10 B2 DQ3_A
14 FBA_D14 E3 DQ4_A
11 FBA_D11 E2 DQ5_A
15 FBA_D15 F2 DQ6_A
12 FBA_D12 G2 DQ7_A
FBA_EDC1 C2 EDC0_A
FBA_DBI1 D2 DBI0_A
IN FBA_WCKB01 5 D4 WCK0_t_A
IN FBA_WCKB01* 5 D5 WCK0_c_A
x16 x8
25 FBA_D25 E12 DQ8_A NC
27 FBA_D27 A12 DQ9_A NC
24 FBA_D24 B11 DQ10_A NC
30 FBA_D30 B13 DQ11_A NC
26 FBA_D26 B12 DQ12_A NC
28 FBA_D28 F13 DQ13_A NC
31 FBA_D31 E13 DQ14_A NC
29 FBA_D29 G13 DQ15_A NC
FBA_EDC3 C13 EDC1_A GND
FBA_DBI3 D13 DBI1_A NC
IN FBA_WCKB23 5 D11 WCK1_t_A NC
IN FBA_WCKB23* 5 D10 WCK1_c_A NC
M3B
K4Z80325BC-HC16
FBGA180
COMMON
NORMAL
x16 x8
3 FBA_D3 P2 DQ0_B NC
5 FBA_D5 V3 DQ1_B NC
6 FBA_D6 U3 DQ2_B NC
2 FBA_D2 U2 DQ3_B NC
4 FBA_D4 P4 DQ4_B NC
0 FBA_D0 R2 DQ5_B NC
1 FBA_D1 M2 DQ6_B NC
7 FBA_D7 P3 DQ7_B NC
FBA_EDC0 T2 EDC0_B GND
FBA_DBI0 R2 DBI0_B NC
IN FBA_WCK01 5 R4 WCK0_t_B NC
IN FBA_WCK01* 5 R5 WCK0_c_B NC
17 FBA_D17 U11 DQ8_B
21 FBA_D21 V12 DQ9_B
16 FBA_D16 U12 DQ10_B
18 FBA_D18 U13 DQ11_B
19 FBA_D19 P12 DQ12_B
20 FBA_D20 N13 DQ13_B
22 FBA_D22 P13 DQ14_B
23 FBA_D23 M13 DQ15_B
FBA_EDC2 T13 EDC1_B
FBA_DBI2 R13 DBI1_B
IN FBA_WCK23 5 R11 WCK1_t_B
IN FBA_WCK23* 5 R10 WCK1_c_B
IN
FBA_CMD[52..0]
5,7
M3C
K4Z80325BC-HC16
FBGA180
COMMON
1 FBA_CMD1 H3 CA0_A
13 FBA_CMD13 G11 CA1_A
12 FBA_CMD12 G4 CA2_A
24 FBA_CMD24 H12 CA3_A
11 FBA_CMD11 H5 CA4_A
15 FBA_CMD15 H10 CA5_A
22 FBA_CMD22 J12 CA6_A
23 FBA_CMD23 J11 CA7_A
0 FBA_CMD0 J4 CA8_A
2 FBA_CMD2 J3 CA9_A
10 FBA_CMD10 J5 CABI_A
14 FBA_CMD14 G10 CKE_A
5 FBA_CMD5 L3 CA0_B
18 FBA_CMD18 M11 CA1_B
7 FBA_CMD7 M4 CA2_B
20 FBA_CMD20 L12 CA3_B
8 FBA_CMD8 L5 CA4_B
16 FBA_CMD16 L10 CA5_B
21 FBA_CMD21 K12 CA6_B
19 FBA_CMD19 K11 CA7_B
6 FBA_CMD6 K4 CA8_B
4 FBA_CMD4 K3 CA9_B
9 FBA_CMD9 K5 CABI_B
17 FBA_CMD17 M10 CKE_B
3 FBA_CMD3 J1 RESET
IN FBA_CLK0* 5 K10 CLK_c
IN FBA_CLK0 5 J10 CLK_t
VREFC K1 FBA_VREFC
nv_res
R684
1K/4/1
5%
402
COMMON
GND
TCK N5 SNN_FBAL_TCK_M
TDI F10 SNN_FBAL_TDI_M
TDO N10 SNN_FBAL_TDO_M
TMS F5 SNN_FBAL_TMS_M
ZQ_A J14 FBA_ZQ_1_A
ZQ_B K14 FBA_ZQ_1_B
R700 121/4/1 402 1% COMMON
R699 121/4/1 402 1% COMMON
GND
RFU_A G5 SNN_FBAL_RFU_A_M
RFU_B M5 SNN_FBAL_RFU_B_M
BI
FB_DBI
FBA_DBI[7..0]
5,7
0 FBA_DBI0
1 FBA_DBI1
2 FBA_DBI2
3 FBA_DBI3
4 FBA_DBI4
5 FBA_DBI5
6 FBA_DBI6
7 FBA_DBI7
OUT
FB_EDC
FBA_EDC[7..0]
5
0 FBA_EDC0
1 FBA_EDC1
2 FBA_EDC2
3 FBA_EDC3
4 FBA_EDC4
5 FBA_EDC5
6 FBA_EDC6
7 FBA_EDC7
decap via : at least 2 gnd vias and 2 power vias for each cap
FBVDDQ
18x 0402 1uF
C900 1u/4/X5R/6.3V/K
C768 1uF/X
C850 1u/4/X5R/6.3V/K
C890 1u/4/X5R/6.3V/K
C860 1u/4/X5R/6.3V/K
C752 1u/4/X5R/6.3V/K
C813 1u/4/X5R/6.3V/K
C769 1u/4/X5R/6.3V/K
C793 1uF/X
C260 1uF/X
C261 1u/4/X5R/6.3V/K
C809 1uF/X
C782 1u/4/X5R/6.3V/K
C2?8 1u/4/X5R/6.3V/K
C834 1u/4/X5R/6.3V/K
C758 1u/4/X5R/6.3V/K
C264 1u/4/X5R/6.3V/K
C259 1u/4/X5R/6.3V/K
6.3V 10% X6S 402 COMMON
GND
FBVDDQ
4x 0603 10uF
C863 10u/6/X5R/6.3V/M
C862 10u/6/X5R/6.3V/M
C870 10u/6/X5R/6.3V/M
C777 10u/6/X5R/6.3V/M
4V 20% X6S 603 COMMON
GND
CLOSE OR UNDER DRAM
FBVDDQ
6x 0603W 22uF
C912 22u/6/X5R/6.3V/M
C811 22u/6/X5R/6.3V/M
C892 22u/6/X5R/6.3V/M
C740 22u/6/X5R/6.3V/M
C926 22u/6/X5R/6.3V/M
C902 22u/6/X5R/6.3V/M
4V 20% X6S 0603W COMMON
GND
FBVDDQ
2x 0603 10uF
C778 10u/6/X5R/6.3V/M
C796 10u/6/X5R/6.3V/M
4V 20% X6S 603 COMMON
GND
AROUND DRAM
1V8
4x 0402 1uF
C256 1u/4/X5R/6.3V/K
C753 1u/4/X5R/6.3V/K
C265 1u/4/X5R/6.3V/K
C899 1u/4/X5R/6.3V/K
6.3V 10% X6S 402 COMMON
GND
CLOSE OR UNDER DRAM

ASSEMBLY <ASSEMBLY_DESCRIPTION>
PAGE DETAIL MEMORY: FBA[31:0]

ALL NVIDIA DESIGN SPECIFICATIONS, REFERENCE SPECIFICATIONS, REFERENCE BOARDS, FILES, DRAWINGS, DIAGNOSTICS, LISTS AND OTHER DOCUMENTS OR INFORMATION (TOGETHER AND SEPARATELY, 'MATERIALS') ARE BEING PROVIDED 'AS IS'. THE MATERIALS MAY CONTAIN KNOWN AND UNKNOWN VIOLATIONS OR DEVIATIONS OF INDUSTRY STANDARDS AND SPECIFICATIONS. NVIDIA MAKES NO WARRANTIES, EXPRESSED, IMPLIED, STATUTORY OR OTHERWISE WITH RESPECT TO THE MATERIALS OR OTHERWISE, AND EXPRESSLY DISCLAIMS ALL IMPLIED WARRANTIES INCLUDING, WITHOUT LIMITATION, THE WARRANTIES OF DESIGN, OF NONINFRINGEMENT, MERCHANTABILITY OR FITNESS FOR A PARTICULAR PURPOSE, OR ARISING FROM A COURSE OF DEALING, TRADE USAGE, TRADE PRACTICE, OR INDUSTRY STANDARDS.

GIGABYTE

Title	Page6: MEMORY: FBA Partition 31..0	
Size Custom	Document Number GV-N3070AORUS M-8GD	Rev 1.0
Date:	Tuesday, August 04, 2020	Sheet 6 of 57

Page7: MEMORY: FBA Partition 63..32

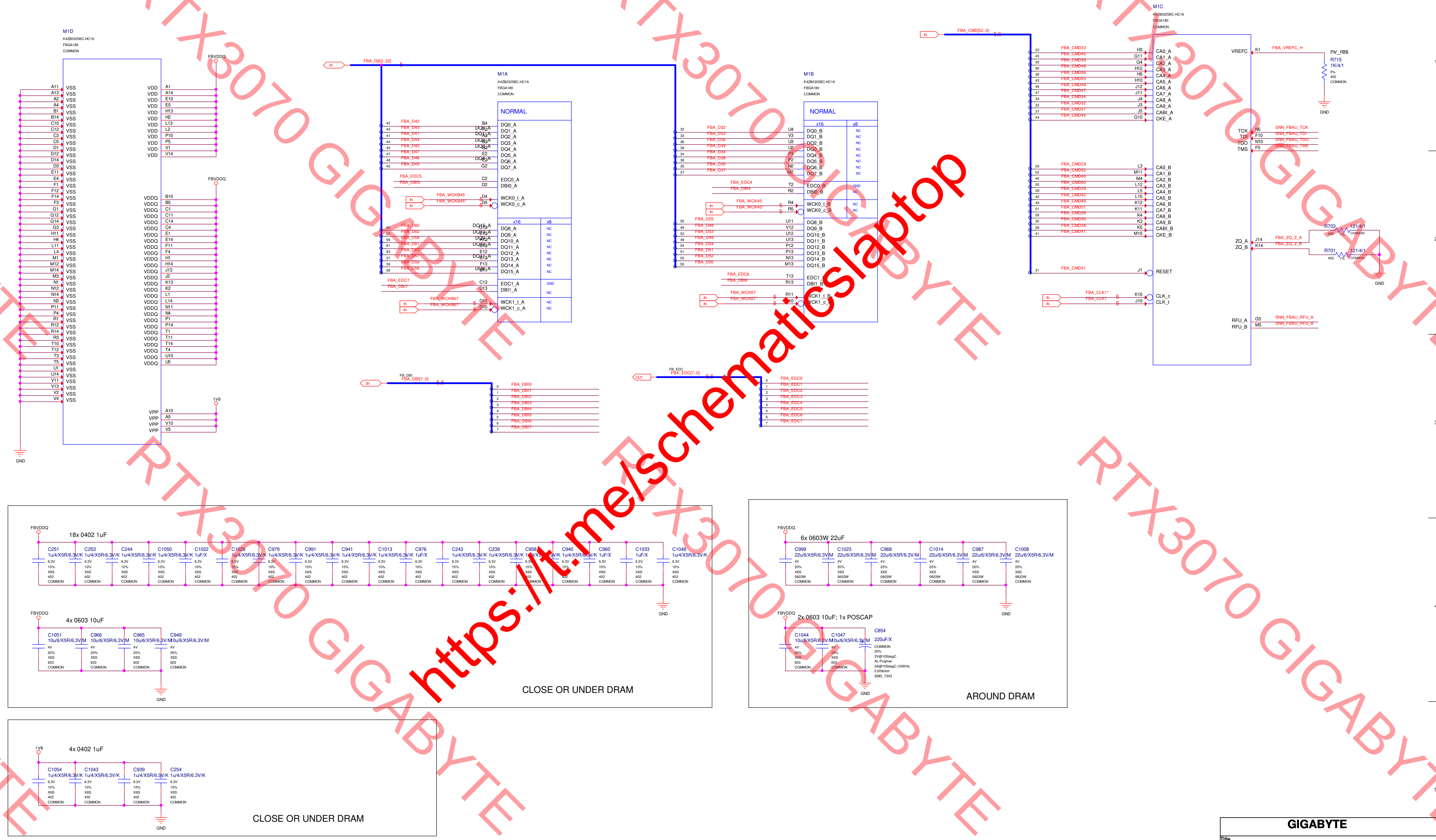

M1D
K4Z80325BC-HC16
FBGA180
COMMON
A11 VSS
A13 VSS
A2 VSS
A4 VSS
B1 VSS
B14 VSS
C10 VSS
C12 VSS
C3 VSS
C5 VSS
D1 VSS
D12 VSS
D14 VSS
D3 VSS
E11 VSS
E4 VSS
F1 VSS
F12 VSS
F14 VSS
F3 VSS
G1 VSS
G12 VSS
G14 VSS
G3 VSS
H11 VSS
H4 VSS
L11 VSS
L4 VSS
M1 VSS
M12 VSS
M14 VSS
M3 VSS
N1 VSS
N12 VSS
N14 VSS
N3 VSS
P11 VSS
P4 VSS
R1 VSS
R12 VSS
R14 VSS
R3 VSS
T10 VSS
T12 VSS
T3 VSS
T5 VSS
U1 VSS
U14 VSS
V11 VSS
V13 VSS
V2 VSS
V4 VSS
GND
FBVDDQ
VDD A1
VDD A14
VDD E10
VDD E5
VDD H13
VDD H2
VDD L13
VDD L2
VDD P10
VDD P5
VDD V1
VDD V14
FBVDDQ
VDDQ B10
VDDQ B5
VDDQ C1
VDDQ C11
VDDQ C14
VDDQ C4
VDDQ E1
VDDQ E14
VDDQ F11
VDDQ F4
VDDQ H1
VDDQ H14
VDDQ J13
VDDQ J2
VDDQ K13
VDDQ K2
VDDQ L1
VDDQ L14
VDDQ N11
VDDQ N4
VDDQ P1
VDDQ P14
VDDQ T1
VDDQ T11
VDDQ T14
VDDQ T4
VDDQ U10
VDDQ U5
1V8
VPP A10
VPP A5
VPP V10
VPP V5
BI
FBA_D[63..32]
5
M1A
K4Z80325BC-HC16
FBGA180
COMMON
NORMAL
42 FBA_D42 B4 DQ0_A
43 FBA_D43 F2 DQ1_A
41 FBA_D41 A3 DQ2_A
44 FBA_D44 B3 DQ3_A
40 FBA_D40 B2 DQ4_A
47 FBA_D47 E2 DQ5_A
46 FBA_D46 E3 DQ6_A
45 FBA_D45 G2 DQ7_A
FBA_EDC5 C2 EDC0_A
FBA_DBI5 D2 DBI0_A
IN FBA_WCKB45 5 D4 WCK0_t_A
IN FBA_WCKB45* 5 D5 WCK0_c_A
x16
x8
60 FBA_D60 G13 DQ8_A NC
62 FBA_D62 F13 DQ9_A NC
58 FBA_D58 A12 DQ10_A NC
61 FBA_D61 B12 DQ11_A NC
63 FBA_D63 E12 DQ12_A NC
57 FBA_D57 B13 DQ13_A NC
59 FBA_D59 F13 DQ14_A NC
56 FBA_D56 B11 DQ15_A NC
FBA_EDC7 C13 EDC1_A GND
FBA_DBI7 D13 DBI1_A NC
IN FBA_WCKB67 5 D11 WCK1_t_A NC
IN FBA_WCKB67* 5 D10 WCK1_c_A NC
M1B
K4Z80325BC-HC16
FBGA180
COMMON
NORMAL
x16
x8
32 FBA_D32 U4 DQ0_B NC
33 FBA_D33 V3 DQ1_B NC
36 FBA_D36 U3 DQ2_B NC
39 FBA_D39 U2 DQ3_B NC
34 FBA_D34 P3 DQ4_B NC
38 FBA_D38 P2 DQ5_B NC
35 FBA_D35 N2 DQ6_B NC
37 FBA_D37 M2 DQ7_B NC
FBA_EDC4 T2 EDC0_B GND
FBA_DBI4 R2 DBI0_B NC
IN FBA_WCK45 5 R4 WCK0_t_B NC
IN FBA_WCK45* 5 R5 WCK0_c_B NC
55 FBA_D55 U11 DQ8_B
48 FBA_D48 V12 DQ9_B
53 FBA_D53 U12 DQ10_B
49 FBA_D49 U13 DQ11_B
54 FBA_D54 P12 DQ12_B
51 FBA_D51 P13 DQ13_B
52 FBA_D52 N13 DQ14_B
50 FBA_D50 M13 DQ15_B
FBA_EDC6 T13 EDC1_B
FBA_DBI6 R13 DBI1_B
IN FBA_WCK67 5 R11 WCK1_t_B
IN FBA_WCK67* 5 R10 WCK1_c_B
BI
FB_DBI
FBA_DBI[7..0]
5,6
0 FBA_DBI0
1 FBA_DBI1
2 FBA_DBI2
3 FBA_DBI3
4 FBA_DBI4
5 FBA_DBI5
6 FBA_DBI6
7 FBA_DBI7
OUT
FB_EDC
FBA_EDC[7..0]
5,6
0 FBA_EDC0
1 FBA_EDC1
2 FBA_EDC2
3 FBA_EDC3
4 FBA_EDC4
5 FBA_EDC5
6 FBA_EDC6
7 FBA_EDC7
IN
FBA_CMD[52..0]
5,6
M1C
K4Z80325BC-HC16
FBGA180
COMMON
33 FBA_CMD33 H3 CA0_A
45 FBA_CMD45 G11 CA1_A
35 FBA_CMD35 G4 CA2_A
46 FBA_CMD46 H12 CA3_A
36 FBA_CMD36 H5 CA4_A
43 FBA_CMD43 H10 CA5_A
48 FBA_CMD48 J12 CA6_A
47 FBA_CMD47 J11 CA7_A
34 FBA_CMD34 J4 CA8_A
32 FBA_CMD32 J3 CA9_A
37 FBA_CMD37 J5 CABI_A
44 FBA_CMD44 G10 CKE_A
29 FBA_CMD29 L3 CA0_B
52 FBA_CMD52 M11 CA1_B
40 FBA_CMD40 M4 CA2_B
50 FBA_CMD50 L12 CA3_B
39 FBA_CMD39 L5 CA4_B
42 FBA_CMD42 L10 CA5_B
49 FBA_CMD49 K12 CA6_B
51 FBA_CMD51 K11 CA7_B
28 FBA_CMD28 K4 CA8_B
30 FBA_CMD30 K3 CA9_B
38 FBA_CMD38 K5 CABI_B
41 FBA_CMD41 M10 CKE_B
31 FBA_CMD31 J1 RESET
IN FBA_CLK1* 5 K10 CLK_c
IN FBA_CLK1 5 J10 CLK_t
VREFC K1 FBA_VREFC_H
nv_res
R715
1K/4/1
5%
402
COMMON
GND
TCK N5 SNN_FBAU_TCK
TDI F10 SNN_FBAU_TDI
TDO N10 SNN_FBAU_TDO
TMS F5 SNN_FBAU_TMS
ZQ_A J14 FBA_ZQ_2_A
ZQ_B K14 FBA_ZQ_2_B
R703 121/4/1 402 1% COMMON
R701 121/4/1 402 1% COMMON
GND
RFU_A G5 SNN_FBAU_RFU_A
RFU_B M5 SNN_FBAU_RFU_B
FBVDDQ
18x 0402 1uF
C251 1u/4/X5R/6.3V/K 6.3V 10% X6S 402 COMMON
C253 1u/4/X5R/6.3V/K 6.3V 10% X6S 402 COMMON
C244 1u/4/X5R/6.3V/K 6.3V 10% X6S 402 COMMON
C1050 1u/4/X5R/6.3V/K 6.3V 10% X6S 402 COMMON
C1022 1uF/X 6.3V 10% X6S 402 COMMON
C1028 1u/4/X5R/6.3V/K 6.3V 10% X6S 402 COMMON
C979 1u/4/X5R/6.3V/K 6.3V 10% X6S 402 COMMON
C991 1u/4/X5R/6.3V/K 6.3V 10% X6S 402 COMMON
C941 1u/4/X5R/6.3V/K 6.3V 10% X6S 402 COMMON
C1013 1u/4/X5R/6.3V/K 6.3V 10% X6S 402 COMMON
C976 1uF/X 6.3V 10% X6S 402 COMMON
C243 1u/4/X5R/6.3V/K 6.3V 10% X6S 402 COMMON
C239 1u/4/X5R/6.3V/K 6.3V 10% X6S 402 COMMON
C958 1u/4/X5R/6.3V/K 6.3V 10% X6S 402 COMMON
C940 1u/4/X5R/6.3V/K 6.3V 10% X6S 402 COMMON
C960 1uF/X 6.3V 10% X6S 402 COMMON
C1033 1uF/X 6.3V 10% X6S 402 COMMON
C1048 1u/4/X5R/6.3V/K 6.3V 10% X6S 402 COMMON
GND
FBVDDQ
4x 0603 10uF
C1051 10u/6/X5R/6.3V/M 4V 20% X6S 603 COMMON
C966 10u/6/X5R/6.3V/M 4V 20% X6S 603 COMMON
C965 10u/6/X5R/6.3V/M 4V 20% X6S 603 COMMON
C949 10u/6/X5R/6.3V/M 4V 20% X6S 603 COMMON
GND
CLOSE OR UNDER DRAM
FBVDDQ
6x 0603W 22uF
C999 22u/6/X5R/6.3V/M 4V 20% X6S 0603W COMMON
C1023 22u/6/X5R/6.3V/M 4V 20% X6S 0603W COMMON
C968 22u/6/X5R/6.3V/M 4V 20% X6S 0603W COMMON
C1014 22u/6/X5R/6.3V/M 4V 20% X6S 0603W COMMON
C987 22u/6/X5R/6.3V/M 4V 20% X6S 0603W COMMON
C1008 22u/6/X5R/6.3V/M 4V 20% X6S 0603W COMMON
GND
FBVDDQ
2x 0603 10uF; 1x POSCAP
C1044 10u/6/X5R/6.3V/M 4V 20% X6S 603 COMMON
C1047 10u/6/X5R/6.3V/M 4V 20% X6S 603 COMMON
C854 220uF/X COMMON 20% 2V@105degC AL-Polymer 3A@105degC,100KHz 0.009ohm SMD_7343
GND
AROUND DRAM
1V8
4x 0402 1uF
C1054 1u/4/X5R/6.3V/K 6.3V 10% X6S 402 COMMON
C1043 1u/4/X5R/6.3V/K 6.3V 10% X6S 402 COMMON
C939 1u/4/X5R/6.3V/K 6.3V 10% X6S 402 COMMON
C254 1u/4/X5R/6.3V/K 6.3V 10% X6S 402 COMMON
GND
CLOSE OR UNDER DRAM

ASSEMBLY <ASSEMBLY_DESCRIPTION>
PAGE DETAIL MEMORY: FBA[63:32]

ALL NVIDIA DESIGN SPECIFICATIONS, REFERENCE SPECIFICATIONS, REFERENCE BOARDS, FILES, DRAWINGS, DIAGNOSTICS, LISTS AND OTHER DOCUMENTS OR INFORMATION (TOGETHER AND SEPARATELY, 'MATERIALS') ARE BEING PROVIDED 'AS IS'. THE MATERIALS MAY CONTAIN KNOWN AND UNKNOWN VIOLATIONS OR DEVIATIONS OF INDUSTRY STANDARDS AND SPECIFICATIONS. NVIDIA MAKES NO WARRANTIES, EXPRESSED, IMPLIED, STATUTORY OR OTHERWISE WITH RESPECT TO THE MATERIALS OR OTHERWISE, AND EXPRESSLY DISCLAIMS ALL IMPLIED WARRANTIES INCLUDING, WITHOUT LIMITATION, THE WARRANTIES OF DESIGN, OF NONINFRINGEMENT, MERCHANTABILITY OR FITNESS FOR A PARTICULAR PURPOSE, OR ARISING FROM A COURSE OF DEALING, TRADE USAGE, TRADE PRACTICE, OR INDUSTRY STANDARDS.

GIGABYTE

Title
Page7: MEMORY: FBA Partition 63..32

Size Custom
Document Number GV-N3070AORUS M-8GD
Rev 1.0

Date: Tuesday, August 04, 2020
Sheet 7 of 57

Page8: MEMORY: FBB Partition 31..0

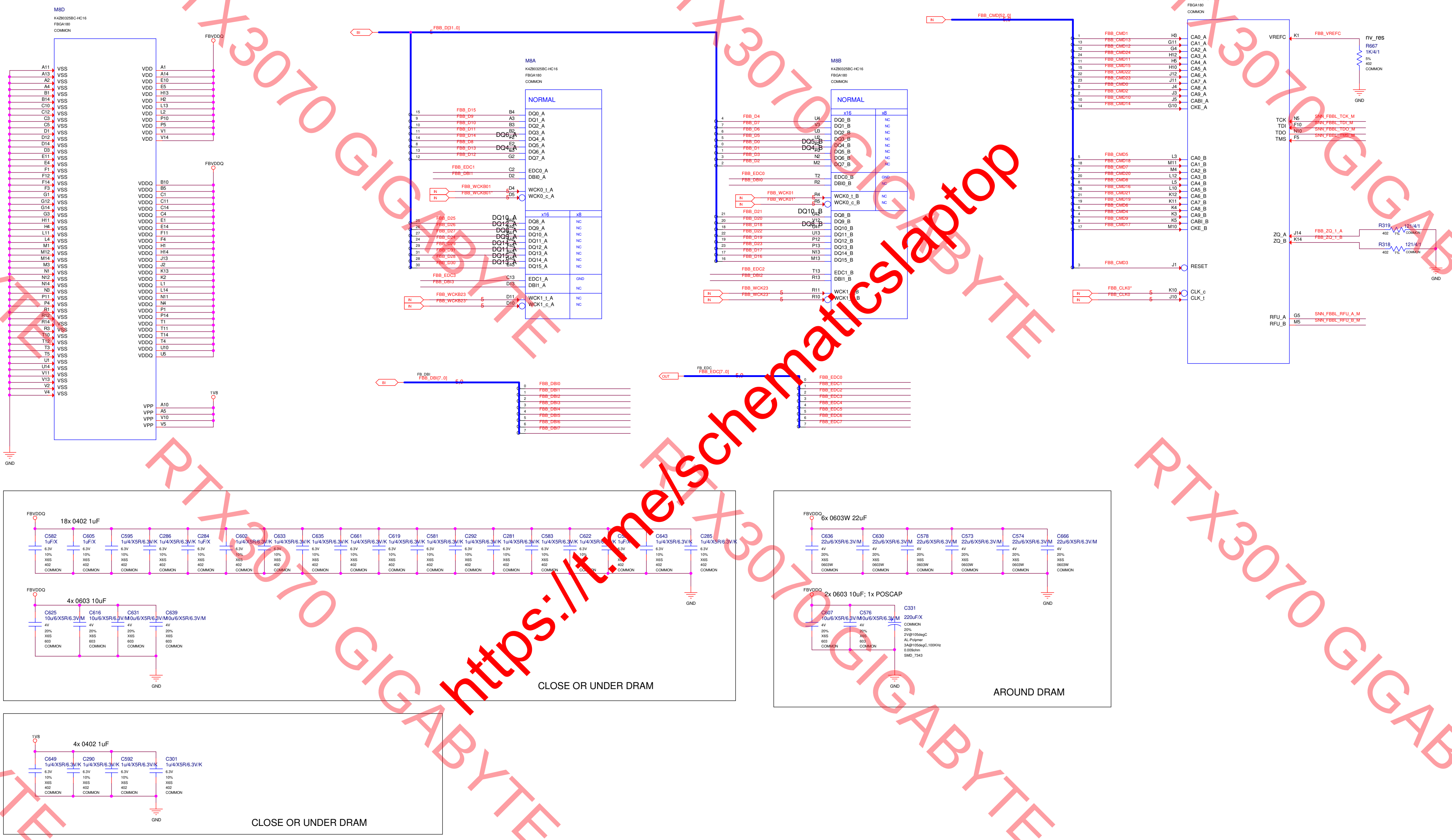
M8D
K4Z80325BC-HC16
FBGA180
COMMON
VSS
A11 A13 A2 A4 B1 B14 C10 C12 C3 C5 D1 D12 D14 D3 E11 E4 F1 F12 F14 F3 G1 G12 G14 G3 H11 H4 L11 L4 M1 M12 M14 M3 N1 N12 N14 N3 P11 P4 R1 R12 R14 R3 T10 T12 T3 T5 U1 U14 V11 V13 V2 V4
VDD
A1 A14 E10 E5 H13 H2 L13 L2 P10 P5 V1 V14
FBVDDQ
VDDQ
B10 B5 C1 C11 C14 C4 E1 E14 F11 F4 H1 H14 J13 J2 K13 K2 L1 L14 N11 N4 P1 P14 T1 T11 T14 T4 U10 U5
1V8
VPP
A10 A5 V10 V5
GND
BI
FBB_D[31..0]
M8A
K4Z80325BC-HC16
FBGA180
COMMON
NORMAL
FBB_D15 FBB_D9 FBB_D10 FBB_D11 FBB_D14 FBB_D8 FBB_D13 FBB_D12
B4 A3 B3 B2 F2 E2 E3 G2
DQ0_A DQ1_A DQ2_A DQ3_A DQ4_A DQ5_A DQ6_A DQ7_A
FBB_EDC1 FBB_DBI1
C2 D2
EDC0_A DBI0_A
IN
FBB_WCKB01 FBB_WCKB01*
D4 D5
WCK0_t_A WCK0_c_A
x16 x8
FBB_D25 FBB_D26 FBB_D27 FBB_D24 FBB_D29 FBB_D31 FBB_D28 FBB_D30
DQ8_A DQ9_A DQ10_A DQ11_A DQ12_A DQ13_A DQ14_A DQ15_A
NC
FBB_EDC3 FBB_DBI3
C13 D13
EDC1_A DBI1_A
GND
FBB_WCKB23 FBB_WCKB23*
D11 D10
WCK1_t_A WCK1_c_A
M8B
K4Z80325BC-HC16
FBGA180
COMMON
NORMAL
FBB_D4 FBB_D7 FBB_D6 FBB_D5 FBB_D0 FBB_D1 FBB_D3 FBB_D2
U4 V3 U3 U2 P2 P3 N2 M2
DQ0_B DQ1_B DQ2_B DQ3_B DQ4_B DQ5_B DQ6_B DQ7_B
FBB_EDC0 FBB_DBI0
T2 R2
EDC0_B DBI0_B
FBB_WCK01 FBB_WCK01*
R4 R5
WCK0_t_B WCK0_c_B
FBB_D21 FBB_D20 FBB_D18 FBB_D22 FBB_D19 FBB_D23 FBB_D17 FBB_D16
U12 V12 U11 U13 P12 P13 N13 M13
DQ8_B DQ9_B DQ10_B DQ11_B DQ12_B DQ13_B DQ14_B DQ15_B
FBB_EDC2 FBB_DBI2
T13 R13
EDC1_B DBI1_B
FBB_WCK23 FBB_WCK23*
R11 R10
WCK1_t_B WCK1_c_B
FB_DBI
FBB_DBI[7..0]
FBB_DBI0 FBB_DBI1 FBB_DBI2 FBB_DBI3 FBB_DBI4 FBB_DBI5 FBB_DBI6 FBB_DBI7
OUT
FB_EDC
FBB_EDC[7..0]
FBB_EDC0 FBB_EDC1 FBB_EDC2 FBB_EDC3 FBB_EDC4 FBB_EDC5 FBB_EDC6 FBB_EDC7
FBB_CMD[52..0]
M8C
K4Z80325BC-HC16
FBGA180
COMMON
FBB_CMD1 FBB_CMD13 FBB_CMD12 FBB_CMD24 FBB_CMD11 FBB_CMD15 FBB_CMD22 FBB_CMD23 FBB_CMD0 FBB_CMD2 FBB_CMD10 FBB_CMD14
H3 G11 G4 H12 H5 H10 J12 J11 J4 J3 J5 G10
CA0_A CA1_A CA2_A CA3_A CA4_A CA5_A CA6_A CA7_A CA8_A CA9_A CABI_A CKE_A
FBB_CMD5 FBB_CMD18 FBB_CMD7 FBB_CMD20 FBB_CMD8 FBB_CMD16 FBB_CMD21 FBB_CMD19 FBB_CMD6 FBB_CMD4 FBB_CMD9 FBB_CMD17
L3 M11 M4 L12 L5 L10 K12 K11 K4 K3 K5 M10
CA0_B CA1_B CA2_B CA3_B CA4_B CA5_B CA6_B CA7_B CA8_B CA9_B CABI_B CKE_B
FBB_CMD3
J1
RESET
FBB_CLK0* FBB_CLK0
K10 J10
CLK_c CLK_t
VREFC K1 FBB_VREFC
nv_res
R667
1K/4/1
5%
402
COMMON
TCK TDI TDO TMS
N5 F10 N10 F5
SNN_FBBL_TCK_M SNN_FBBL_TDI_M SNN_FBBL_TDO_M SNN_FBBL_TMS_M
ZQ_A ZQ_B
J14 K14
FBB_ZQ_1_A FBB_ZQ_1_B
R319 121/4/1 402 1% COMMON
R318 121/4/1 402 1% COMMON
RFU_A RFU_B
G5 M5
SNN_FBBL_RFU_A_M SNN_FBBL_RFU_B_M
18x 0402 1uF
C582 1uF/X
C605 1uF/X
C595 1u/4/X5R/6.3V/K
C286 1u/4/X5R/6.3V/K
C284 1uF/X
C602 1u/4/X5R/6.3V/K
C633 1u/4/X5R/6.3V/K
C635 1u/4/X5R/6.3V/K
C661 1u/4/X5R/6.3V/K
C619 1u/4/X5R/6.3V/K
C581 1u/4/X5R/6.3V/K
C292 1u/4/X5R/6.3V/K
C281 1u/4/X5R/6.3V/K
C583 1u/4/X5R/6.3V/K
C622 1u/4/X5R/6.3V/K
C5 1uF/X
C643 1u/4/X5R/6.3V/K
C285 1u/4/X5R/6.3V/K
6.3V 10% X6S 402 COMMON
4x 0603 10uF
C625 10u/6/X5R/6.3V/M
C616 10u/6/X5R/6.3V/M
C631 10u/6/X5R/6.3V/M
C639 10u/6/X5R/6.3V/M
4V 20% X6S 603 COMMON
CLOSE OR UNDER DRAM
6x 0603W 22uF
C636 22u/6/X5R/6.3V/M
C630 22u/6/X5R/6.3V/M
C578 22u/6/X5R/6.3V/M
C573 22u/6/X5R/6.3V/M
C574 22u/6/X5R/6.3V/M
C666 22u/6/X5R/6.3V/M
4V 20% X6S 0603W COMMON
2x 0603 10uF; 1x POSCAP
C607 10u/6/X5R/6.3V/M
C576 10u/6/X5R/6.3V/M
C331 220uF/X COMMON 20% 2V@105degC AL-Polymer 3A@105degC,100KHz 0.009ohm SMD_7343
AROUND DRAM
4x 0402 1uF
C649 1u/4/X5R/6.3V/K
C290 1u/4/X5R/6.3V/K
C592 1u/4/X5R/6.3V/K
C301 1u/4/X5R/6.3V/K
CLOSE OR UNDER DRAM

ASSEMBLY <ASSEMBLY_DESCRIPTION>
PAGE DETAIL MEMORY: FBB[31:0]

ALL NVIDIA DESIGN SPECIFICATIONS, REFERENCE SPECIFICATIONS, REFERENCE BOARDS, FILES, DRAWINGS, DIAGNOSTICS, LISTS AND OTHER DOCUMENTS OR INFORMATION (TOGETHER AND SEPARATELY, 'MATERIALS') ARE BEING PROVIDED 'AS IS'. THE MATERIALS MAY CONTAIN KNOWN AND UNKNOWN VIOLATIONS OR DEVIATIONS OF INDUSTRY STANDARDS AND SPECIFICATIONS. NVIDIA MAKES NO WARRANTIES, EXPRESSED, IMPLIED, STATUTORY OR OTHERWISE WITH RESPECT TO THE MATERIALS OR OTHERWISE, AND EXPRESSLY DISCLAIMS ALL IMPLIED WARRANTIES INCLUDING, WITHOUT LIMITATION, THE WARRANTIES OF DESIGN, OF NONINFRINGEMENT, MERCHANTABILITY OR FITNESS FOR A PARTICULAR PURPOSE, OR ARISING FROM A COURSE OF DEALING, TRADE USAGE, TRADE PRACTICE, OR INDUSTRY STANDARDS.

GIGABYTE

Title
Page8: MEMORY: FBB Partition 31..0

Size	Document Number	Rev
Custom	GV-N3070AORUS M-8GD	1.0

Date: Tuesday, August 04, 2020 Sheet 8 of 57

Page9: MEMORY: FBB Partition 63..32

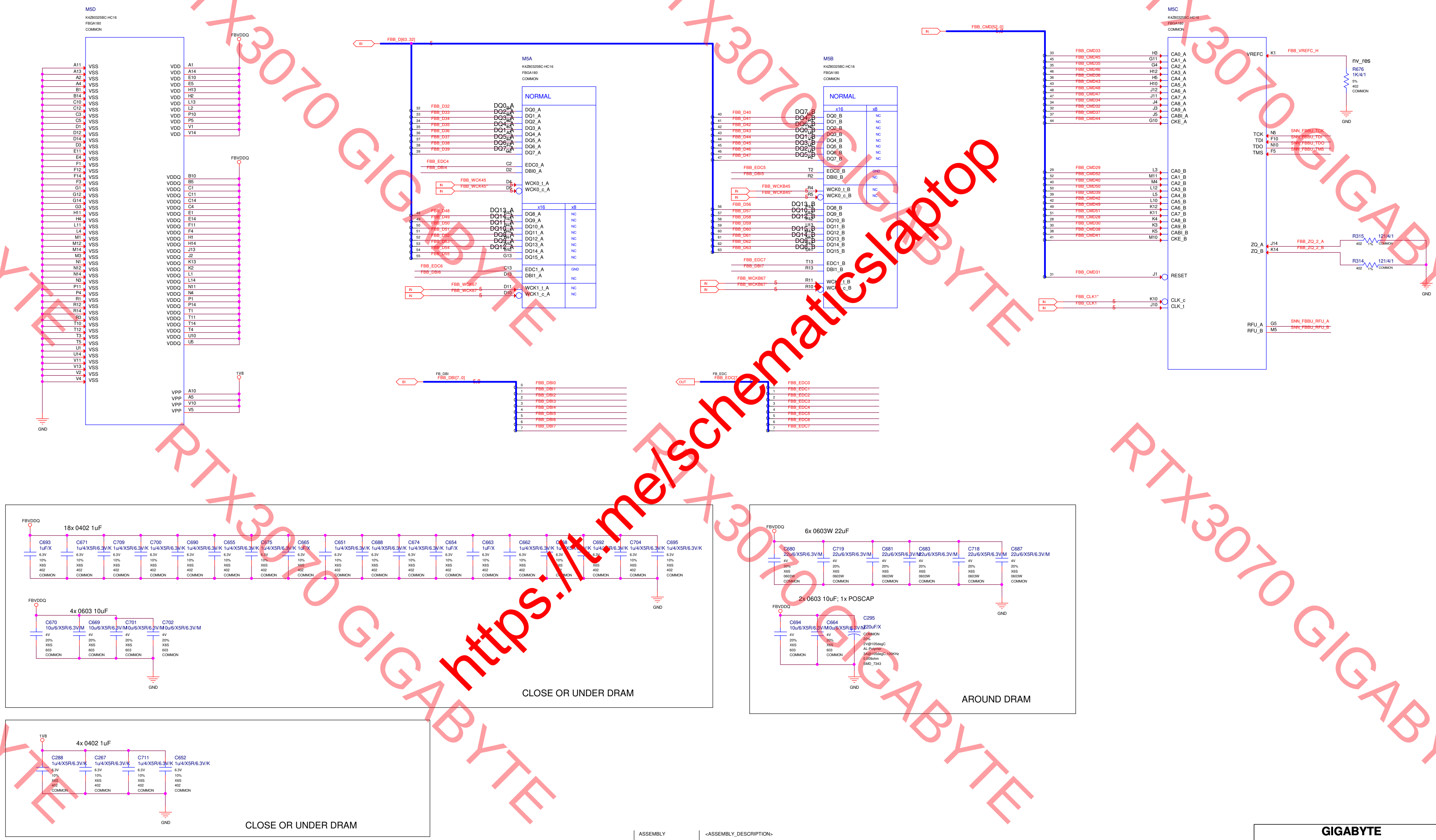
M5D
K4Z80325BC-HC16
FBGA180
COMMON
VSS: A11 A13 A2 A4 B1 B14 C10 C12 C3 C5 D1 D12 D14 D3 E11 E4 F1 F12 F14 F3 G1 G12 G14 G3 H11 H4 L11 L4 M1 M12 M14 M3 N1 N12 N14 N3 P11 P4 R1 R12 R14 R3 T10 T12 T3 T5 U1 U14 V11 V13 V2 V4
GND
FBVDDQ
VDD: A1 A14 E10 E5 H13 H2 L13 L2 P10 P5 V1 V14
VDDQ: B10 B5 C1 C11 C14 C4 E1 E14 F11 F4 H1 H14 J13 J2 K13 K2 L1 L14 N11 N4 P1 P14 T1 T11 T14 T4 U10 U5
1V8
VPP: A10 A5 V10 V5
BI
FBB_D[63..32]
M5A
K4Z80325BC-HC16
FBGA180
COMMON
NORMAL
FBB_D32 … FBB_D39 → DQ0_A … DQ7_A
FBB_EDC4 C2 EDC0_A
FBB_DBI4 D2 DBI0_A
FBB_WCK45 D4 WCK0_t_A
FBB_WCK45* D5 WCK0_c_A
x16 x8
FBB_D48 … FBB_D55 → DQ8_A … DQ15_A
NC
FBB_EDC6 C13 EDC1_A GND
FBB_DBI6 D13 DBI1_A NC
FBB_WCK67 D11 WCK1_t_A NC
FBB_WCK67* D10 WCK1_c_A NC
M5B
K4Z80325BC-HC16
FBGA180
COMMON
NORMAL
FBB_D40 … FBB_D47 → DQ0_B … DQ7_B
FBB_EDC5 T2 EDC0_B GND
FBB_DBI5 R2 DBI0_B NC
FBB_WCKB45 R4 WCK0_t_B NC
FBB_WCKB45* R5 WCK0_c_B NC
FBB_D56 … FBB_D63 → DQ8_B … DQ15_B
FBB_EDC7 T13 EDC1_B
FBB_DBI7 R13 DBI1_B
FBB_WCKB67 R11 WCK1_t_B
FBB_WCKB67* R10 WCK1_c_B
IN
FBB_CMD[52..0]
M5C
K4Z80325BC-HC16
FBGA180
COMMON
FBB_CMD33 H3 CA0_A
FBB_CMD45 G11 CA1_A
FBB_CMD35 G4 CA2_A
FBB_CMD46 H12 CA3_A
FBB_CMD36 H5 CA4_A
FBB_CMD43 H10 CA5_A
FBB_CMD48 J12 CA6_A
FBB_CMD47 J11 CA7_A
FBB_CMD34 J4 CA8_A
FBB_CMD32 J3 CA9_A
FBB_CMD37 J5 CABI_A
FBB_CMD44 G10 CKE_A
FBB_CMD29 L3 CA0_B
FBB_CMD52 M11 CA1_B
FBB_CMD40 M4 CA2_B
FBB_CMD50 L12 CA3_B
FBB_CMD39 L5 CA4_B
FBB_CMD42 L10 CA5_B
FBB_CMD49 K12 CA6_B
FBB_CMD51 K11 CA7_B
FBB_CMD28 K4 CA8_B
FBB_CMD30 K3 CA9_B
FBB_CMD38 K5 CABI_B
FBB_CMD41 M10 CKE_B
FBB_CMD31 J1 RESET
FBB_CLK1* K10 CLK_c
FBB_CLK1 J10 CLK_t
VREFC K1 FBB_VREFC_H
nv_res
R676 1K/4/1 5% 402 COMMON
TCK N5 SNN_FBBU_TCK
TDI F10 SNN_FBBU_TDI
TDO N10 SNN_FBBU_TDO
TMS F5 SNN_FBBU_TMS
ZQ_A J14 FBB_ZQ_2_A
ZQ_B K14 FBB_ZQ_2_B
R315 121/4/1 402 1% COMMON
R314 121/4/1 402 1% COMMON
RFU_A G5 SNN_FBBU_RFU_A
RFU_B M5 SNN_FBBU_RFU_B
FB_DBI
FBB_DBI[7..0]
FBB_DBI0 … FBB_DBI7
OUT
FB_EDC
FBB_EDC[7..0]
FBB_EDC0 … FBB_EDC7
18x 0402 1uF
C693 1uF/X
C671 1u/4/X5R/6.3V/K
C709 1u/4/X5R/6.3V/K
C700 1u/4/X5R/6.3V/K
C690 1u/4/X5R/6.3V/K
C655 1u/4/X5R/6.3V/K
C675 1u/4/X5R/6.3V/K
C665 1uF/X
C651 1u/4/X5R/6.3V/K
C688 1u/4/X5R/6.3V/K
C674 1u/4/X5R/6.3V/K
C654 1uF/X
C663 1uF/X
C662 1u/4/X5R/6.3V/K
C668 1u/4/X5R/6.3V/K
C692 1u/4/X5R/6.3V/K
C704 1u/4/X5R/6.3V/K
C695 1u/4/X5R/6.3V/K
6.3V 10% X6S 402 COMMON
4x 0603 10uF
C670 10u/6/X5R/6.3V/M
C669 10u/6/X5R/6.3V/M
C701 10u/6/X5R/6.3V/M
C702 10u/6/X5R/6.3V/M
4V 20% X6S 603 COMMON
CLOSE OR UNDER DRAM
6x 0603W 22uF
C680 22u/6/X5R/6.3V/M
C719 22u/6/X5R/6.3V/M
C681 22u/6/X5R/6.3V/M
C683 22u/6/X5R/6.3V/M
C718 22u/6/X5R/6.3V/M
C687 22u/6/X5R/6.3V/M
4V 20% X6S 0603W COMMON
2x 0603 10uF; 1x POSCAP
C694 10u/6/X5R/6.3V/M
C664 10u/6/X5R/6.3V/M
C295 220uF/X COMMON 20% 2V@105degC AL-Polymer 3A@105degC,100KHz 0.009ohm SMD_7343
AROUND DRAM
4x 0402 1uF
C288 1u/4/X5R/6.3V/K
C267 1u/4/X5R/6.3V/K
C711 1u/4/X5R/6.3V/K
C652 1u/4/X5R/6.3V/K
CLOSE OR UNDER DRAM

ASSEMBLY <ASSEMBLY_DESCRIPTION>
PAGE DETAIL MEMORY: FBB[63:32]

ALL NVIDIA DESIGN SPECIFICATIONS, REFERENCE SPECIFICATIONS, REFERENCE BOARDS, FILES, DRAWINGS, DIAGNOSTICS, LISTS AND OTHER DOCUMENTS OR INFORMATION (TOGETHER AND SEPARATELY, 'MATERIALS') ARE BEING PROVIDED 'AS IS'. THE MATERIALS MAY CONTAIN KNOWN AND UNKNOWN VIOLATIONS OR DEVIATIONS OF INDUSTRY STANDARDS AND SPECIFICATIONS. NVIDIA MAKES NO WARRANTIES, EXPRESSED, IMPLIED, STATUTORY OR OTHERWISE WITH RESPECT TO THE MATERIALS OR OTHERWISE, AND EXPRESSLY DISCLAIMS ALL IMPLIED WARRANTIES INCLUDING, WITHOUT LIMITATION, THE WARRANTIES OF DESIGN, OF NONINFRINGEMENT, MERCHANTABILITY OR FITNESS FOR A PARTICULAR PURPOSE, OR ARISING FROM A COURSE OF DEALING, TRADE USAGE, TRADE PRACTICE, OR INDUSTRY STANDARDS.

GIGABYTE

Title	Page9: MEMORY: FBB Partition 63..32	
Size Custom	Document Number GV-N3070AORUS M-8GD	Rev 1.0
Date:	Tuesday, August 04, 2020	Sheet 9 of 57

Page10: MEMORY: GPU Partition C/D

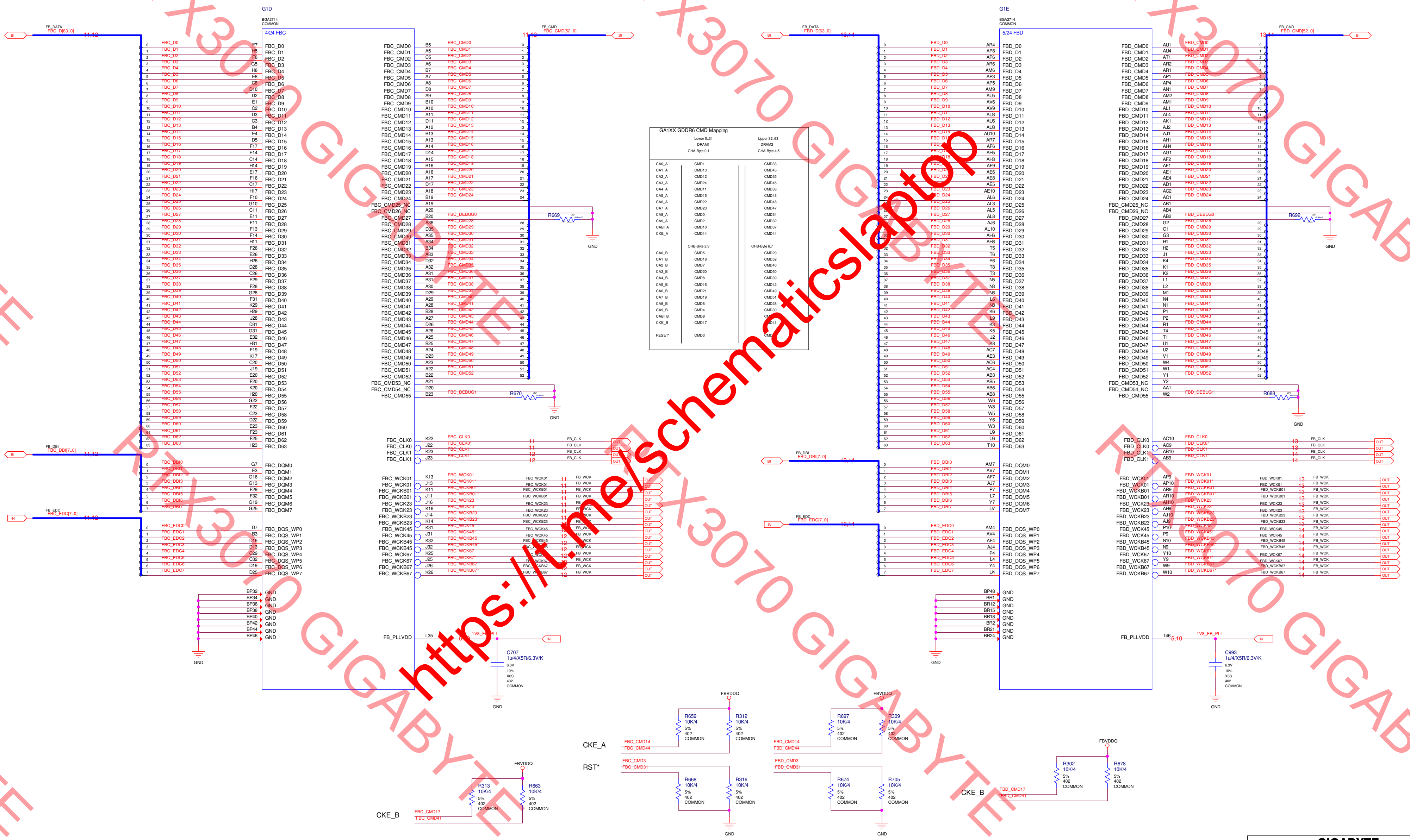

G1D
BGA2714
COMMON
4/24 FBC
FB_DATA FBC_D[63..0] 11,12 BI
FB_DBI FBC_DBI[7..0] 11,12 BI
FB_EDC FBC_EDC[7..0] 11,12 IN
FB_CMD FBC_CMD[52..0] 11,12 BI
F7 FBC_D0
H5 FBC_D1
F8 FBC_D2
G5 FBC_D3
H8 FBC_D4
E8 FBC_D5
C8 FBC_D6
D10 FBC_D7
D2 FBC_D8
E1 FBC_D9
C2 FBC_D10
D3 FBC_D11
C3 FBC_D12
B4 FBC_D13
E4 FBC_D14
D5 FBC_D15
F17 FBC_D16
E14 FBC_D17
C14 FBC_D18
H14 FBC_D19
E17 FBC_D20
F16 FBC_D21
C17 FBC_D22
H17 FBC_D23
F10 FBC_D24
G10 FBC_D25
C11 FBC_D26
E11 FBC_D27
F11 FBC_D28
F13 FBC_D29
F14 FBC_D30
H11 FBC_D31
F26 FBC_D32
E26 FBC_D33
H26 FBC_D34
D28 FBC_D35
C26 FBC_D36
E29 FBC_D37
F28 FBC_D38
G28 FBC_D39
F31 FBC_D40
K29 FBC_D41
H29 FBC_D42
J28 FBC_D43
D31 FBC_D44
G31 FBC_D45
E32 FBC_D46
H31 FBC_D47
F19 FBC_D48
K17 FBC_D49
C20 FBC_D50
J19 FBC_D51
E20 FBC_D52
F20 FBC_D53
K20 FBC_D54
H20 FBC_D55
G22 FBC_D56
F22 FBC_D57
C23 FBC_D58
D22 FBC_D59
E23 FBC_D60
F23 FBC_D61
F25 FBC_D62
H23 FBC_D63
G7 FBC_DQM0
E3 FBC_DQM1
G16 FBC_DQM2
G13 FBC_DQM3
F29 FBC_DQM4
F32 FBC_DQM5
G19 FBC_DQM6
G25 FBC_DQM7
D7 FBC_DQS_WP0
B3 FBC_DQS_WP1
D16 FBC_DQS_WP2
D13 FBC_DQS_WP3
C29 FBC_DQS_WP4
C32 FBC_DQS_WP5
D19 FBC_DQS_WP6
D25 FBC_DQS_WP7
BP32 GND
BP34 GND
BP36 GND
BP38 GND
BP40 GND
BP42 GND
BP44 GND
BP46 GND
GND
FBC_CMD0 B5
FBC_CMD1 A5
FBC_CMD2 C5
FBC_CMD3 A6
FBC_CMD4 B7
FBC_CMD5 A7
FBC_CMD6 A8
FBC_CMD7 D8
FBC_CMD8 A9
FBC_CMD9 B10
FBC_CMD10 A10
FBC_CMD11 A11
FBC_CMD12 D11
FBC_CMD13 A12
FBC_CMD14 B13
FBC_CMD15 A13
FBC_CMD16 A14
FBC_CMD17 D14
FBC_CMD18 A15
FBC_CMD19 B16
FBC_CMD20 A16
FBC_CMD21 A17
FBC_CMD22 D17
FBC_CMD23 A18
FBC_CMD24 B19
FBC_CMD25_NC A19
FBC_CMD26_NC A20
FBC_CMD27 B20 FBC_DEBUG0
FBC_CMD28 A36
FBC_CMD29 D35
FBC_CMD30 A35
FBC_CMD31 A34
FBC_CMD32 B34
FBC_CMD33 A33
FBC_CMD34 D32
FBC_CMD35 A32
FBC_CMD36 A31
FBC_CMD37 B31
FBC_CMD38 A30
FBC_CMD39 D29
FBC_CMD40 A29
FBC_CMD41 A28
FBC_CMD42 B28
FBC_CMD43 A27
FBC_CMD44 D26
FBC_CMD45 A26
FBC_CMD46 A25
FBC_CMD47 B25
FBC_CMD48 A24
FBC_CMD49 D23
FBC_CMD50 A23
FBC_CMD51 A22
FBC_CMD52 B22
FBC_CMD53_NC A21
FBC_CMD54_NC D20
FBC_CMD55 B23 FBC_DEBUG1
R669 201 49.9ohm/X
R670 201 49.9ohm/X
GND
FBC_CLK0 K22 FBC_CLK0 11 FB_CLK OUT
FBC_CLK0 J22 FBC_CLK0* 11 FB_CLK OUT
FBC_CLK1 K23 FBC_CLK1 12 FB_CLK OUT
FBC_CLK1 J23 FBC_CLK1* 12 FB_CLK OUT
FBC_WCK01 K13 FBC_WCK01 11 FB_WCK OUT
FBC_WCK01 J13 FBC_WCK01* 11 FB_WCK OUT
FBC_WCKB01 K11 FBC_WCKB01 11 FB_WCK OUT
FBC_WCKB01 J11 FBC_WCKB01* 11 FB_WCK OUT
FBC_WCK23 J16 FBC_WCK23 11 FB_WCK OUT
FBC_WCK23 K16 FBC_WCK23* 11 FB_WCK OUT
FBC_WCKB23 J14 FBC_WCKB23 11 FB_WCK OUT
FBC_WCKB23 K14 FBC_WCKB23* 11 FB_WCK OUT
FBC_WCK45 K31 FBC_WCK45 12 FB_WCK OUT
FBC_WCK45 J31 FBC_WCK45* 12 FB_WCK OUT
FBC_WCKB45 K32 FBC_WCKB45 12 FB_WCK OUT
FBC_WCKB45 J32 FBC_WCKB45* 12 FB_WCK OUT
FBC_WCK67 K25 FBC_WCK67 12 FB_WCK OUT
FBC_WCK67 J25 FBC_WCK67* 12 FB_WCK OUT
FBC_WCKB67 J26 FBC_WCKB67 12 FB_WCK OUT
FBC_WCKB67 K26 FBC_WCKB67* 12 FB_WCK OUT
FB_PLLVDD L35 5,10 1V8_FB_PLL IN
C707 1u/4/X5R/6.3V/K 6.3V 10% X6S 402 COMMON
GND
G1E
BGA2714
COMMON
5/24 FBD
FB_DATA FBD_D[63..0] 13,14 BI
FB_DBI FBD_DBI[7..0] 13,14 BI
FB_EDC FBD_EDC[7..0] 13,14 IN
FB_CMD FBD_CMD[52..0] 13,14 BI
AR4 FBD_D0
AP8 FBD_D1
AP6 FBD_D2
AR6 FBD_D3
AM6 FBD_D4
AP3 FBD_D5
AP5 FBD_D6
AM9 FBD_D7
AU5 FBD_D8
AV6 FBD_D9
AV9 FBD_D10
AU3 FBD_D11
AU6 FBD_D12
AU8 FBD_D13
AU10 FBD_D14
AR7 FBD_D15
AF6 FBD_D16
AH5 FBD_D17
AH3 FBD_D18
AF9 FBD_D19
AE6 FBD_D20
AE8 FBD_D21
AE5 FBD_D22
AE10 FBD_D23
AL6 FBD_D24
AL3 FBD_D25
AL5 FBD_D26
AL8 FBD_D27
AJ6 FBD_D28
AL10 FBD_D29
AH6 FBD_D30
AH8 FBD_D31
T5 FBD_D32
T6 FBD_D33
P6 FBD_D34
T8 FBD_D35
T3 FBD_D36
N5 FBD_D37
N3 FBD_D38
N6 FBD_D39
L6 FBD_D40
N8 FBD_D41
K6 FBD_D42
L9 FBD_D43
K3 FBD_D44
K5 FBD_D45
J2 FBD_D46
K8 FBD_D47
AC7 FBD_D48
AE3 FBD_D49
AC6 FBD_D50
AC4 FBD_D51
AB3 FBD_D52
AB5 FBD_D53
AB6 FBD_D54
AB8 FBD_D55
W6 FBD_D56
W8 FBD_D57
W5 FBD_D58
Y6 FBD_D59
W3 FBD_D60
U9 FBD_D61
U6 FBD_D62
T10 FBD_D63
AM7 FBD_DQM0
AV7 FBD_DQM1
AF7 FBD_DQM2
AJ7 FBD_DQM3
P7 FBD_DQM4
L7 FBD_DQM5
Y7 FBD_DQM6
U7 FBD_DQM7
AM4 FBD_DQS_WP0
AV4 FBD_DQS_WP1
AF4 FBD_DQS_WP2
AJ4 FBD_DQS_WP3
P4 FBD_DQS_WP4
L4 FBD_DQS_WP5
Y4 FBD_DQS_WP6
U4 FBD_DQS_WP7
BP48 GND
BR1 GND
BR12 GND
BR15 GND
BR18 GND
BR2 GND
BR21 GND
BR24 GND
GND
FBD_CMD0 AU1
FBD_CMD1 AU4
FBD_CMD2 AT1
FBD_CMD3 AR2
FBD_CMD4 AR1
FBD_CMD5 AP1
FBD_CMD6 AP4
FBD_CMD7 AN1
FBD_CMD8 AM2
FBD_CMD9 AM1
FBD_CMD10 AL1
FBD_CMD11 AL4
FBD_CMD12 AK1
FBD_CMD13 AJ2
FBD_CMD14 AJ1
FBD_CMD15 AH1
FBD_CMD16 AH4
FBD_CMD17 AG1
FBD_CMD18 AF2
FBD_CMD19 AF1
FBD_CMD20 AE1
FBD_CMD21 AE4
FBD_CMD22 AD1
FBD_CMD23 AC2
FBD_CMD24 AC1
FBD_CMD25_NC AB1
FBD_CMD26_NC AB4
FBD_CMD27 AB2 FBD_DEBUG0
FBD_CMD28 G2
FBD_CMD29 G1
FBD_CMD30 G3
FBD_CMD31 H1
FBD_CMD32 H2
FBD_CMD33 J1
FBD_CMD34 K4
FBD_CMD35 K1
FBD_CMD36 K2
FBD_CMD37 L1
FBD_CMD38 L2
FBD_CMD39 M1
FBD_CMD40 N4
FBD_CMD41 N1
FBD_CMD42 P1
FBD_CMD43 P2
FBD_CMD44 R1
FBD_CMD45 T4
FBD_CMD46 T1
FBD_CMD47 U1
FBD_CMD48 U2
FBD_CMD49 V1
FBD_CMD50 W4
FBD_CMD51 W1
FBD_CMD52 Y1
FBD_CMD53_NC Y2
FBD_CMD54_NC AA1
FBD_CMD55 W2 FBD_DEBUG1
R692 201 49.9ohm/X
R688 201 49.9ohm/X
GND
FBD_CLK0 AC10 FBD_CLK0 13 FB_CLK OUT
FBD_CLK0 AC9 FBD_CLK0* 13 FB_CLK OUT
FBD_CLK1 AB10 FBD_CLK1 14 FB_CLK OUT
FBD_CLK1 AB9 FBD_CLK1* 14 FB_CLK OUT
FBD_WCK01 AP9 FBD_WCK01 13 FB_WCK OUT
FBD_WCK01 AP10 FBD_WCK01* 13 FB_WCK OUT
FBD_WCKB01 AR9 FBD_WCKB01 13 FB_WCK OUT
FBD_WCKB01 AR10 FBD_WCKB01* 13 FB_WCK OUT
FBD_WCK23 AH10 FBD_WCK23 13 FB_WCK OUT
FBD_WCK23 AH9 FBD_WCK23* 13 FB_WCK OUT
FBD_WCKB23 AJ10 FBD_WCKB23 13 FB_WCK OUT
FBD_WCKB23 AJ9 FBD_WCKB23* 13 FB_WCK OUT
FBD_WCK45 P10 FBD_WCK45 14 FB_WCK OUT
FBD_WCK45 P9 FBD_WCK45* 14 FB_WCK OUT
FBD_WCKB45 N10 FBD_WCKB45 14 FB_WCK OUT
FBD_WCKB45 N9 FBD_WCKB45* 14 FB_WCK OUT
FBD_WCK67 Y10 FBD_WCK67 14 FB_WCK OUT
FBD_WCK67 Y9 FBD_WCK67* 14 FB_WCK OUT
FBD_WCKB67 W9 FBD_WCKB67 14 FB_WCK OUT
FBD_WCKB67 W10 FBD_WCKB67* 14 FB_WCK OUT
FB_PLLVDD T46 5,10 1V8_FB_PLL IN
C993 1u/4/X5R/6.3V/K 6.3V 10% X6S 402 COMMON
GND
FBVDDQ
CKE_A FBC_CMD14 FBC_CMD44
RST* FBC_CMD3 FBC_CMD31
R659 10K/4 5% 402 COMMON
R312 10K/4 5% 402 COMMON
R668 10K/4 5% 402 COMMON
R316 10K/4 5% 402 COMMON
FBD_CMD14 FBD_CMD44
FBD_CMD3 FBD_CMD31
R697 10K/4 5% 402 COMMON
R309 10K/4 5% 402 COMMON
R674 10K/4 5% 402 COMMON
R705 10K/4 5% 402 COMMON
GND
CKE_B FBC_CMD17 FBC_CMD41
R313 10K/4 5% 402 COMMON
R663 10K/4 5% 402 COMMON
CKE_B FBD_CMD17 FBD_CMD41
R302 10K/4 5% 402 COMMON
R678 10K/4 5% 402 COMMON

GA1XX GDDR6 CMD Mapping

	Lower 0..31 DRAM1 CHA-Byte 0,1	Upper 32..63 DRAM2 CHA-Byte 4,5
CA0_A	CMD1	CMD33
CA1_A	CMD13	CMD45
CA2_A	CMD12	CMD35
CA3_A	CMD24	CMD46
CA4_A	CMD11	CMD36
CA5_A	CMD15	CMD43
CA6_A	CMD22	CMD48
CA7_A	CMD23	CMD47
CA8_A	CMD0	CMD34
CA9_A	CMD2	CMD32
CABI_A	CMD10	CMD37
CKE_A	CMD14	CMD44
	CHB-Byte 2,3	CHB-Byte 6,7
CA0_B	CMD5	CMD29
CA1_B	CMD18	CMD52
CA2_B	CMD7	CMD40
CA3_B	CMD20	CMD50
CA4_B	CMD8	CMD39
CA5_B	CMD16	CMD42
CA6_B	CMD21	CMD49
CA7_B	CMD19	CMD51
CA8_B	CMD6	CMD28
CA9_B	CMD4	CMD30
CABI_B	CMD9	[illegible]
CKE_B	CMD17	[illegible]D41
RESET*	CMD3	CMD[illegible]

ASSEMBLY <ASSEMBLY_DESCRIPTION>
PAGE DETAIL MEMORY: GPU FB_CD

ALL NVIDIA DESIGN SPECIFICATIONS, REFERENCE SPECIFICATIONS, REFERENCE BOARDS, FILES, DRAWINGS, DIAGNOSTICS, LISTS AND OTHER DOCUMENTS OR INFORMATION (TOGETHER AND SEPARATELY, 'MATERIALS') ARE BEING PROVIDED 'AS IS'. THE MATERIALS MAY CONTAIN KNOWN AND UNKNOWN VIOLATIONS OR DEVIATIONS OF INDUSTRY STANDARDS AND SPECIFICATIONS. NVIDIA MAKES NO WARRANTIES, EXPRESSED, IMPLIED, STATUTORY OR OTHERWISE WITH RESPECT TO THE MATERIALS OR OTHERWISE, AND EXPRESSLY DISCLAIMS ALL IMPLIED WARRANTIES INCLUDING, WITHOUT LIMITATION, THE WARRANTIES OF DESIGN, OF NONINFRINGEMENT, MERCHANTABILITY OR FITNESS FOR A PARTICULAR PURPOSE, OR ARISING FROM A COURSE OF DEALING, TRADE USAGE, TRADE PRACTICE, OR INDUSTRY STANDARDS.

GIGABYTE

Title
Page10: MEMORY: GPU Partition C/D

Size: Custom
Document Number: GV-N3070AORUS M-8GD
Rev: 1.0

Date: Thursday, August 06, 2020 H Sheet 10 of 57

Page11: MEMORY: FBC Partition 31..0

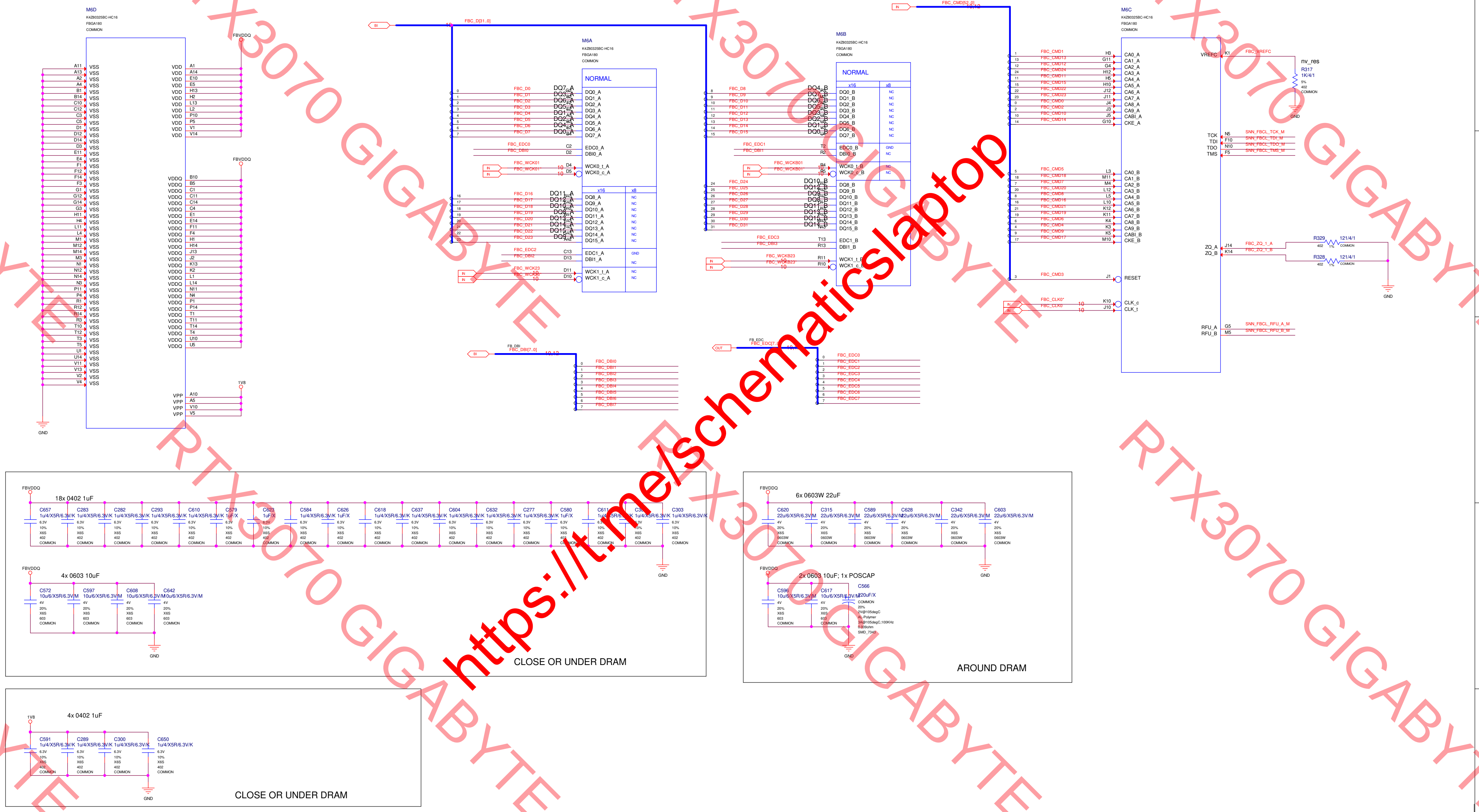
M6D
K4Z80325BC-HC16
FBGA180
COMMON
A11 A13 A2 A4 B1 B14 C10 C12 C3 C5 D1 D12 D14 D3 E11 E4 F1 F12 F14 F3 G1 G12 G14 G3 H11 H4 L11 L4 M1 M12 M14 M3 N1 N12 N14 N3 P11 P4 R1 R12 R14 R3 T10 T12 T3 T5 U1 U14 V11 V13 V2 V4
VSS
GND
FBVDDQ
VDD
A1 A14 E10 E5 H13 H2 L13 L2 P10 P5 V1 V14
VDDQ
B10 B5 C1 C11 C14 C4 E1 E14 F11 F4 H1 H14 J13 J2 K13 K2 L1 L14 N11 N4 P1 P14 T1 T11 T14 T4 U10 U5
1V8
VPP
A10 A5 V10 V5
BI
FBC_D[31..0]
10
M6A
K4Z80325BC-HC16
FBGA180
COMMON
NORMAL
FBC_D0 FBC_D1 FBC_D2 FBC_D3 FBC_D4 FBC_D5 FBC_D6 FBC_D7
DQ7_A DQ3_A DQ6_A DQ5_A DQ1_A DQ2_A DQ4_A DQ0_A
G2 B2 F2 E2 A3 B3 E3 B4
DQ0_A DQ1_A DQ2_A DQ3_A DQ4_A DQ5_A DQ6_A DQ7_A
FBC_EDC0 C2 EDC0_A
FBC_DBI0 D2 DBI0_A
IN FBC_WCK01 10 D4 WCK0_t_A
IN FBC_WCK01* 10 D5 WCK0_c_A
x16 x8
FBC_D16 FBC_D17 FBC_D18 FBC_D19 FBC_D20 FBC_D21 FBC_D22 FBC_D23
DQ11_A DQ12_A DQ10_A DQ8_A DQ13_A DQ14_A DQ15_A DQ9_A
B13 E12 F12 B12 F13 E13 A13 A12
DQ8_A DQ9_A DQ10_A DQ11_A DQ12_A DQ13_A DQ14_A DQ15_A
NC
FBC_EDC2 C13 EDC1_A GND
FBC_DBI2 D13 DBI1_A NC
IN FBC_WCK23 10 D11 WCK1_t_A NC
IN FBC_WCK23* 10 D10 WCK1_c_A NC
M6B
K4Z80325BC-HC16
FBGA180
COMMON
NORMAL
FBC_D8 FBC_D9 FBC_D10 FBC_D11 FBC_D12 FBC_D13 FBC_D14 FBC_D15
DQ4_B DQ7_B DQ6_B DQ5_B DQ3_B DQ2_B DQ1_B DQ0_B
P3 M2 N2 P2 U2 U3 V3 U4
DQ0_B DQ1_B DQ2_B DQ3_B DQ4_B DQ5_B DQ6_B DQ7_B
FBC_EDC1 T2 EDC0_B GND
FBC_DBI1 R2 DBI0_B NC
IN FBC_WCKB01 10 R4 WCK0_t_B NC
IN FBC_WCKB01* 10 R5 WCK0_c_B NC
FBC_D24 FBC_D25 FBC_D26 FBC_D27 FBC_D28 FBC_D29 FBC_D30 FBC_D31
DQ10_B DQ12_B DQ9_B DQ8_B DQ11_B DQ13_B DQ15_B DQ14_B
U13 P12 V12 U11 U13 P13 M13 N13
DQ8_B DQ9_B DQ10_B DQ11_B DQ12_B DQ13_B DQ14_B DQ15_B
FBC_EDC3 T13 EDC1_B
FBC_DBI3 R13 DBI1_B
IN FBC_WCKB23 10 R11 WCK1_t_B
IN FBC_WCKB23* 10 R10 WCK1_c_B
FB_DBI
FBC_DBI[7..0]
10,12
FBC_DBI0 FBC_DBI1 FBC_DBI2 FBC_DBI3 FBC_DBI4 FBC_DBI5 FBC_DBI6 FBC_DBI7
FB_EDC
OUT
FBC_EDC[7..0]
FBC_EDC0 FBC_EDC1 FBC_EDC2 FBC_EDC3 FBC_EDC4 FBC_EDC5 FBC_EDC6 FBC_EDC7
IN
FBC_CMD[52..0]
10,12
M6C
K4Z80325BC-HC16
FBGA180
COMMON
FBC_CMD1 H3 CA0_A
FBC_CMD13 G11 CA1_A
FBC_CMD12 G4 CA2_A
FBC_CMD24 H12 CA3_A
FBC_CMD11 H5 CA4_A
FBC_CMD15 H10 CA5_A
FBC_CMD22 J12 CA6_A
FBC_CMD23 J11 CA7_A
FBC_CMD0 J4 CA8_A
FBC_CMD2 J3 CA9_A
FBC_CMD10 J5 CABI_A
FBC_CMD14 G10 CKE_A
FBC_CMD5 L3 CA0_B
FBC_CMD18 M11 CA1_B
FBC_CMD7 M4 CA2_B
FBC_CMD20 L12 CA3_B
FBC_CMD8 L5 CA4_B
FBC_CMD16 L10 CA5_B
FBC_CMD21 K12 CA6_B
FBC_CMD19 K11 CA7_B
FBC_CMD6 K4 CA8_B
FBC_CMD4 K3 CA9_B
FBC_CMD9 K5 CABI_B
FBC_CMD17 M10 CKE_B
FBC_CMD3 J1 RESET
IN FBC_CLK0* 10 K10 CLK_c
IN FBC_CLK0 10 J10 CLK_t
VREFC K1 FBC_VREFC
nv_res
R317
1K/4/1
5%
402
COMMON
TCK N5 SNN_FBCL_TCK_M
TDI F10 SNN_FBCL_TDI_M
TDO N10 SNN_FBCL_TDO_M
TMS F5 SNN_FBCL_TMS_M
ZQ_A J14 FBC_ZQ_1_A
ZQ_B K14 FBC_ZQ_1_B
R329 121/4/1 402 1% COMMON
R328 121/4/1 402 1% COMMON
RFU_A G5 SNN_FBCL_RFU_A_M
RFU_B M5 SNN_FBCL_RFU_B_M
FBVDDQ
18x 0402 1uF
C657 1u/4/X5R/6.3V/K
C283 1u/4/X5R/6.3V/K
C282 1u/4/X5R/6.3V/K
C293 1u/4/X5R/6.3V/K
C610 1u/4/X5R/6.3V/K
C579 1uF/X
C623 1uF/X
C584 1u/4/X5R/6.3V/K
C626 1uF/X
C618 1u/4/X5R/6.3V/K
C637 1u/4/X5R/6.3V/K
C604 1u/4/X5R/6.3V/K
C632 1u/4/X5R/6.3V/K
C277 1u/4/X5R/6.3V/K
C580 1uF/X
C611 1u/4/X5R/6.3V/K
C3 1u/4/X5R/6.3V/K
C303 1u/4/X5R/6.3V/K
6.3V 10% X6S 402 COMMON
4x 0603 10uF
C572 10u/6/X5R/6.3V/M
C597 10u/6/X5R/6.3V/M
C608 10u/6/X5R/6.3V/M
C642 10u/6/X5R/6.3V/M
4V 20% X6S 603 COMMON
CLOSE OR UNDER DRAM
6x 0603W 22uF
C620 22u/6/X5R/6.3V/M
C315 22u/6/X5R/6.3V/M
C589 22u/6/X5R/6.3V/M
C628 22u/6/X5R/6.3V/M
C342 22u/6/X5R/6.3V/M
C603 22u/6/X5R/6.3V/M
4V 20% X6S 0603W COMMON
2x 0603 10uF; 1x POSCAP
C596 10u/6/X5R/6.3V/M
C617 10u/6/X5R/6.3V/M
C566 220uF/X
COMMON 20% 2V@105degC AL-Polymer 3A@105degC,100KHz 0.009ohm SMD_7343
AROUND DRAM
1V8
4x 0402 1uF
C591 1u/4/X5R/6.3V/K
C289 1u/4/X5R/6.3V/K
C300 1u/4/X5R/6.3V/K
C650 1u/4/X5R/6.3V/K
CLOSE OR UNDER DRAM
GND

ASSEMBLY <ASSEMBLY_DESCRIPTION>
PAGE DETAIL MEMORY: FBC[31:0]

ALL NVIDIA DESIGN SPECIFICATIONS, REFERENCE SPECIFICATIONS, REFERENCE BOARDS, FILES, DRAWINGS, DIAGNOSTICS, LISTS AND OTHER DOCUMENTS OR INFORMATION (TOGETHER AND SEPARATELY, 'MATERIALS') ARE BEING PROVIDED 'AS IS'. THE MATERIALS MAY CONTAIN KNOWN AND UNKNOWN VIOLATIONS OR DEVIATIONS OF INDUSTRY STANDARDS AND SPECIFICATIONS. NVIDIA MAKES NO WARRANTIES, EXPRESSED, IMPLIED, STATUTORY OR OTHERWISE WITH RESPECT TO THE MATERIALS OR OTHERWISE, AND EXPRESSLY DISCLAIMS ALL IMPLIED WARRANTIES INCLUDING, WITHOUT LIMITATION, THE WARRANTIES OF DESIGN, OF NONINFRINGEMENT, MERCHANTABILITY OR FITNESS FOR A PARTICULAR PURPOSE, OR ARISING FROM A COURSE OF DEALING, TRADE USAGE, TRADE PRACTICE, OR INDUSTRY STANDARDS.

GIGABYTE

Title
Page11: MEMORY: FBC Partition 31..0

Size Custom
Document Number GV-N3070AORUS M-8GD
Rev 1.0
Date: Tuesday, August 04, 2020
Sheet 11 of 57

Page12: MEMORY: FBC Partition 63..32

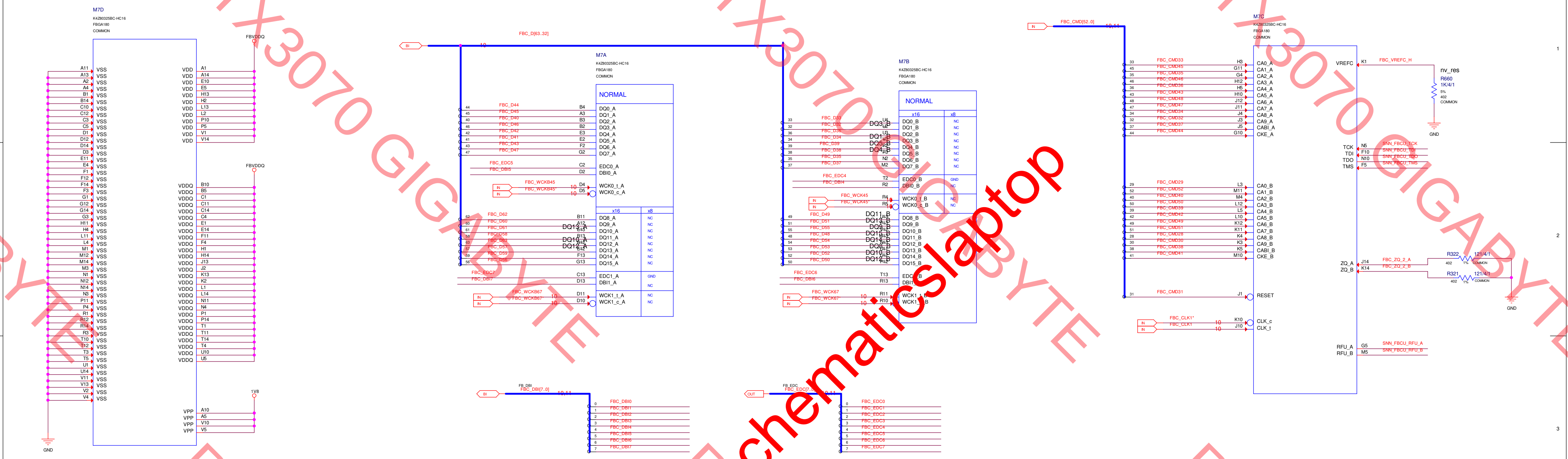
M7D
K4Z80325BC-HC16
FBGA180
COMMON
VSS: A11 A13 A2 A4 B1 B14 C10 C12 C3 C5 D1 D12 D14 D3 E11 E4 F1 F12 F14 F3 G1 G12 G14 G3 H11 H4 L11 L4 M1 M12 M14 M3 N1 N12 N14 N3 P11 P4 R1 R12 R14 R3 T10 T12 T3 T5 U1 U14 V11 V13 V2 V4
GND
FBVDDQ
VDD: A1 A14 E10 E5 H13 H2 L13 L2 P10 P5 V1 V14
FBVDDQ
VDDQ: B10 B5 C1 C11 C14 C4 E1 E14 F11 F4 H1 H14 J13 J2 K13 K2 L1 L14 N11 N4 P1 P14 T1 T11 T14 T4 U10 U5
1V8
VPP: A10 A5 V10 V5
FBC_D[63..32]
BI
10
M7A
K4Z80325BC-HC16
FBGA180
COMMON
NORMAL
44 FBC_D44 B4 DQ0_A
45 FBC_D45 A3 DQ1_A
40 FBC_D40 B3 DQ2_A
46 FBC_D46 B2 DQ3_A
42 FBC_D42 E3 DQ4_A
41 FBC_D41 E2 DQ5_A
43 FBC_D43 F2 DQ6_A
47 FBC_D47 G2 DQ7_A
FBC_EDC5 C2 EDC0_A
FBC_DBI5 D2 DBI0_A
IN FBC_WCKB45 10 D4 WCK0_t_A
IN FBC_WCKB45* 10 D5 WCK0_c_A
x16 x8
62 FBC_D62 B11 DQ8_A NC
60 FBC_D60 A12 DQ9_A NC
61 FBC_D61 E13 DQ10_A NC
58 FBC_D58 B13 DQ11_A NC
63 FBC_D63 B12 DQ12_A NC
57 FBC_D57 E12 DQ13_A NC
59 FBC_D59 F13 DQ14_A NC
56 FBC_D56 G13 DQ15_A NC
DQ13_A DQ10_A DQ12_A
FBC_EDC7 C13 EDC1_A GND
FBC_DBI7 D13 DBI1_A NC
IN FBC_WCKB67 10 D11 WCK1_t_A NC
IN FBC_WCKB67* 10 D10 WCK1_c_A NC
M7B
K4Z80325BC-HC16
FBGA180
COMMON
NORMAL
x16 x8
33 FBC_D33 U4 DQ0_B NC
32 FBC_D32 U2 DQ1_B NC
36 FBC_D36 U3 DQ2_B NC
34 FBC_D34 V3 DQ3_B NC
39 FBC_D39 P2 DQ4_B NC
38 FBC_D38 P3 DQ5_B NC
35 FBC_D35 N2 DQ6_B NC
37 FBC_D37 M2 DQ7_B NC
DQ3_B DQ1_B DQ5_B DQ4_B
FBC_EDC4 T2 EDC0_B GND
FBC_DBI4 R2 DBI0_B NC
IN FBC_WCK45 10 R4 WCK0_t_B NC
IN FBC_WCK45* 10 R5 WCK0_c_B NC
49 FBC_D49 DQ8_B
51 FBC_D51 DQ9_B
55 FBC_D55 DQ10_B
48 FBC_D48 DQ11_B
54 FBC_D54 DQ12_B
53 FBC_D53 DQ13_B
52 FBC_D52 DQ14_B
50 FBC_D50 P12 DQ15_B
DQ11_B DQ13_B DQ9_B DQ15_B DQ14_B DQ8_B DQ10_B DQ12_B
FBC_EDC6 T13 EDC1_B
FBC_DBI6 R13 DBI1_B
IN FBC_WCK67 10 R11 WCK1_t_B
IN FBC_WCK67* 10 R10 WCK1_c_B
FB_DBI
FBC_DBI[7..0]
BI
10,11
0 FBC_DBI0
1 FBC_DBI1
2 FBC_DBI2
3 FBC_DBI3
4 FBC_DBI4
5 FBC_DBI5
6 FBC_DBI6
7 FBC_DBI7
FB_EDC
FBC_EDC[7..0]
OUT
10,11
0 FBC_EDC0
1 FBC_EDC1
2 FBC_EDC2
3 FBC_EDC3
4 FBC_EDC4
5 FBC_EDC5
6 FBC_EDC6
7 FBC_EDC7
IN FBC_CMD[52..0] 10,11
M7C
K4Z80325BC-HC16
FBGA180
COMMON
33 FBC_CMD33 H3 CA0_A
45 FBC_CMD45 G11 CA1_A
35 FBC_CMD35 G4 CA2_A
46 FBC_CMD46 H12 CA3_A
36 FBC_CMD36 H5 CA4_A
43 FBC_CMD43 H10 CA5_A
48 FBC_CMD48 J12 CA6_A
47 FBC_CMD47 J11 CA7_A
34 FBC_CMD34 J4 CA8_A
32 FBC_CMD32 J3 CA9_A
37 FBC_CMD37 J5 CABI_A
44 FBC_CMD44 G10 CKE_A
29 FBC_CMD29 L3 CA0_B
52 FBC_CMD52 M11 CA1_B
40 FBC_CMD40 M4 CA2_B
50 FBC_CMD50 L12 CA3_B
39 FBC_CMD39 L5 CA4_B
42 FBC_CMD42 L10 CA5_B
49 FBC_CMD49 K12 CA6_B
51 FBC_CMD51 K11 CA7_B
28 FBC_CMD28 K4 CA8_B
30 FBC_CMD30 K3 CA9_B
38 FBC_CMD38 K5 CABI_B
41 FBC_CMD41 M10 CKE_B
31 FBC_CMD31 J1 RESET
IN FBC_CLK1* 10 K10 CLK_c
IN FBC_CLK1 10 J10 CLK_t
VREFC K1 FBC_VREFC_H
nv_res
R660
1K/4/1
5%
402
COMMON
GND
TCK N5 SNN_FBCU_TCK
TDI F10 SNN_FBCU_TDI
TDO N10 SNN_FBCU_TDO
TMS F5 SNN_FBCU_TMS
ZQ_A J14 FBC_ZQ_2_A
ZQ_B K14 FBC_ZQ_2_B
R322 121/4/1 402 1% COMMON
R321 121/4/1 402 1% COMMON
GND
RFU_A G5 SNN_FBCU_RFU_A
RFU_B M5 SNN_FBCU_RFU_B

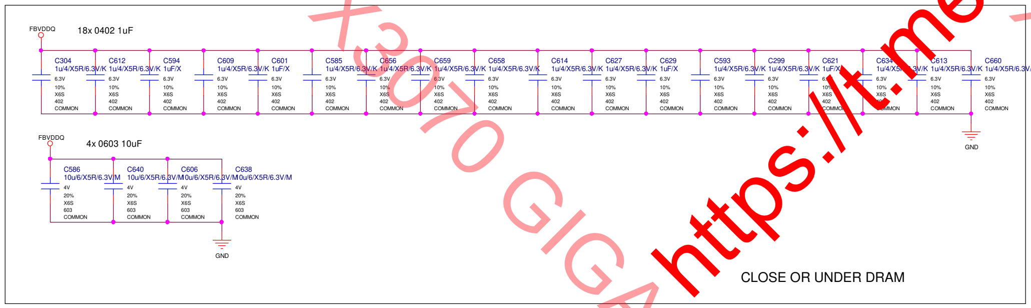
FBVDDQ
18x 0402 1uF
C304 1u/4/X5R/6.3V/K
C612 1u/4/X5R/6.3V/K
C594 1uF/X
C609 1u/4/X5R/6.3V/K
C601 1uF/X
C585 1u/4/X5R/6.3V/K
C656 1u/4/X5R/6.3V/K
C659 1u/4/X5R/6.3V/K
C658 1u/4/X5R/6.3V/K
C614 1u/4/X5R/6.3V/K
C627 1u/4/X5R/6.3V/K
C629 1uF/X
C593 1u/4/X5R/6.3V/K
C299 1u/4/X5R/6.3V/K
C621 1uF/X
C634 1u/4/X5R/6.3V/K
C613 1u/4/X5R/6.3V/K
C660 1u/4/X5R/6.3V/K
6.3V 10% X6S 402 COMMON
GND
FBVDDQ
4x 0603 10uF
C586 10u/6/X5R/6.3V/M
C640 10u/6/X5R/6.3V/M
C606 10u/6/X5R/6.3V/M
C638 10u/6/X5R/6.3V/M
4V 20% X6S 603 COMMON
GND
CLOSE OR UNDER DRAM

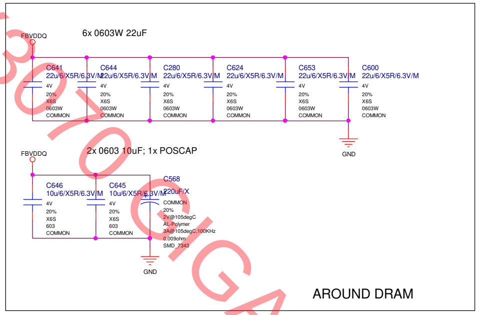
FBVDDQ
6x 0603W 22uF
C641 22u/6/X5R/6.3V/M
C644 22u/6/X5R/6.3V/M
C280 22u/6/X5R/6.3V/M
C624 22u/6/X5R/6.3V/M
C653 22u/6/X5R/6.3V/M
C600 22u/6/X5R/6.3V/M
4V 20% X6S 0603W COMMON
GND
FBVDDQ
2x 0603 10uF; 1x POSCAP
C646 10u/6/X5R/6.3V/M
C645 10u/6/X5R/6.3V/M
4V 20% X6S 603 COMMON
C568 220uF/X
COMMON
20%
2V@105degC
AL-Polymer
3A@105degC,100KHz
0.009ohm
SMD_7343
GND
AROUND DRAM

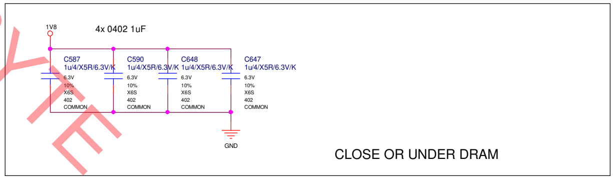
1V8
4x 0402 1uF
C587 1u/4/X5R/6.3V/K
C590 1u/4/X5R/6.3V/K
C648 1u/4/X5R/6.3V/K
C647 1u/4/X5R/6.3V/K
6.3V 10% X6S 402 COMMON
GND
CLOSE OR UNDER DRAM

ASSEMBLY <ASSEMBLY_DESCRIPTION>
PAGE DETAIL MEMORY: FBC[63:32]

ALL NVIDIA DESIGN SPECIFICATIONS, REFERENCE SPECIFICATIONS, REFERENCE BOARDS, FILES, DRAWINGS, DIAGNOSTICS, LISTS AND OTHER DOCUMENTS OR INFORMATION (TOGETHER AND SEPARATELY, 'MATERIALS') ARE BEING PROVIDED 'AS IS'. THE MATERIALS MAY CONTAIN KNOWN AND UNKNOWN VIOLATIONS OR DEVIATIONS OF INDUSTRY STANDARDS AND SPECIFICATIONS. NVIDIA MAKES NO WARRANTIES, EXPRESSED, IMPLIED, STATUTORY OR OTHERWISE WITH RESPECT TO THE MATERIALS OR OTHERWISE, AND EXPRESSLY DISCLAIMS ALL IMPLIED WARRANTIES INCLUDING, WITHOUT LIMITATION, THE WARRANTIES OF DESIGN, OF NONINFRINGEMENT, MERCHANTABILITY OR FITNESS FOR A PARTICULAR PURPOSE, OR ARISING FROM A COURSE OF DEALING, TRADE USAGE, TRADE PRACTICE, OR INDUSTRY STANDARDS.

GIGABYTE

Title
Page12: MEMORY: FBC Partition 63..32

Size Custom
Document Number GV-N3070AORUS M-8GD
Rev 1.0

Date: Tuesday, August 04, 2020

Page13: MEMORY: FBD Partition 31..0

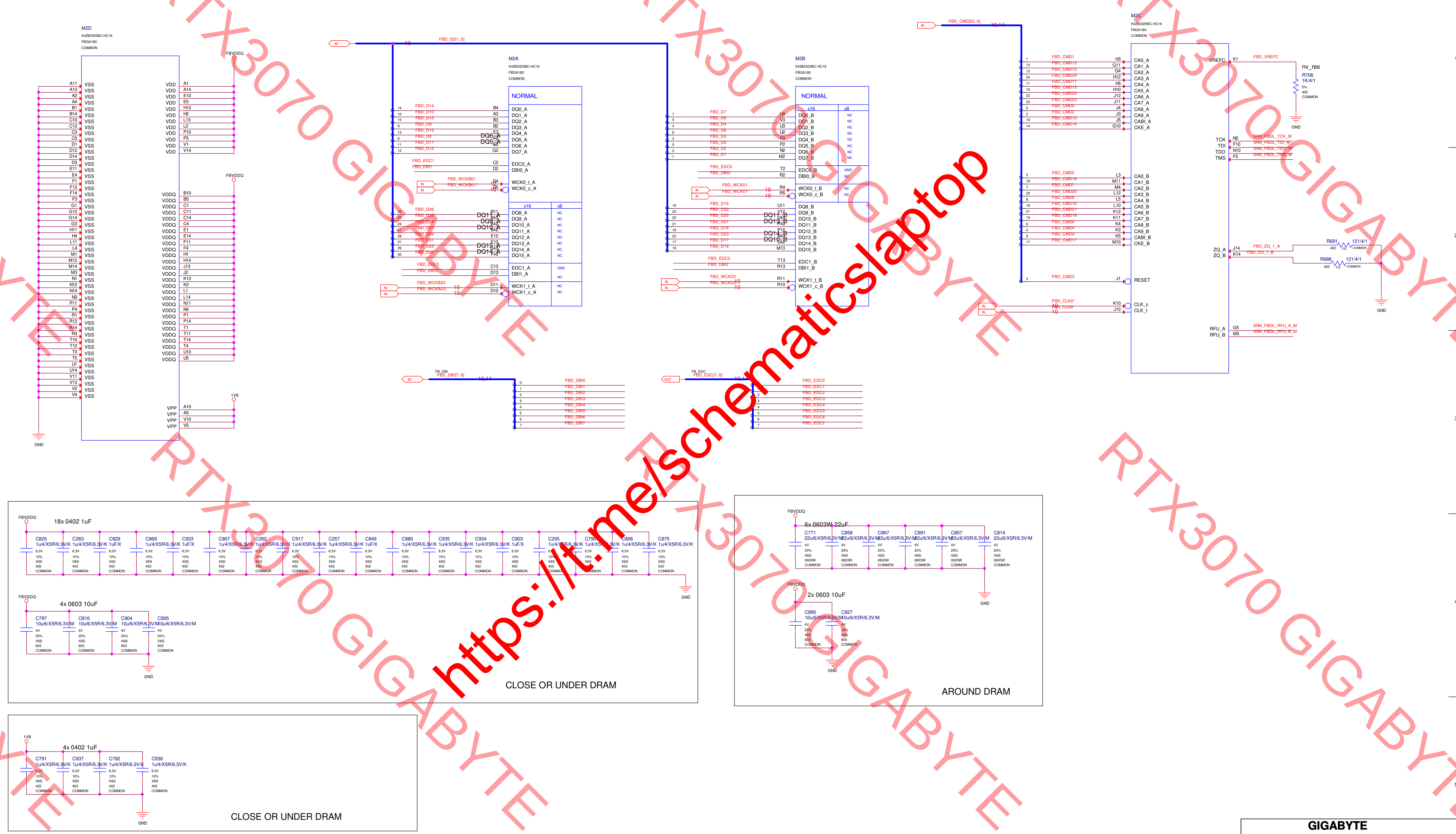

M2D
K4Z80325BC-HC16
FBGA180
COMMON
VSS
VDD
VDDQ
VPP
FBVDDQ
1V8
GND
A11 A13 A2 A4 B1 B14 C10 C12 C3 C5 D1 D12 D14 D3 E11 E4 F1 F12 F14 F3 G1 G12 G14 G3 H11 H4 L11 L4 M1 M12 M14 M3 N1 N12 N14 N3 P11 P4 R1 R12 R14 R3 T10 T12 T3 T5 U1 U14 V11 V13 V2 V4
A1 A14 E10 E5 H13 H2 L13 L2 P10 P5 V1 V14
B10 B5 C1 C11 C14 C4 E1 E14 F11 F4 H1 H14 J13 J2 K13 K2 L1 L14 N11 N4 P1 P14 T1 T11 T14 T4 U10 U5
A10 A5 V10 V5
BI
FBD_D[31..0]
M2A
K4Z80325BC-HC16
FBGA180
COMMON
NORMAL
DQ0_A DQ1_A DQ2_A DQ3_A DQ4_A DQ5_A DQ6_A DQ7_A
EDC0_A
DBI0_A
WCK0_t_A
WCK0_c_A
x16
x8
DQ8_A DQ9_A DQ10_A DQ11_A DQ12_A DQ13_A DQ14_A DQ15_A
EDC1_A
DBI1_A
WCK1_t_A
WCK1_c_A
NC
GND
FBD_D14 FBD_D10 FBD_D15 FBD_D9 FBD_D13 FBD_D8 FBD_D11 FBD_D12
FBD_EDC1
FBD_DBI1
FBD_WCKB01
FBD_WCKB01*
FBD_D26 FBD_D25 FBD_D24 FBD_D27 FBD_D28 FBD_D31 FBD_D29 FBD_D30
FBD_EDC3
FBD_DBI3
FBD_WCKB23
FBD_WCKB23*
IN
M2B
K4Z80325BC-HC16
FBGA180
COMMON
NORMAL
DQ0_B DQ1_B DQ2_B DQ3_B DQ4_B DQ5_B DQ6_B DQ7_B
EDC0_B
DBI0_B
WCK0_t_B
WCK0_c_B
DQ8_B DQ9_B DQ10_B DQ11_B DQ12_B DQ13_B DQ14_B DQ15_B
EDC1_B
DBI1_B
WCK1_t_B
WCK1_c_B
FBD_D7 FBD_D5 FBD_D4 FBD_D6 FBD_D3 FBD_D0 FBD_D2 FBD_D1
FBD_EDC0
FBD_DBI0
FBD_WCK01
FBD_WCK01*
FBD_D16 FBD_D22 FBD_D20 FBD_D21 FBD_D18 FBD_D23 FBD_D17 FBD_D19
FBD_EDC2
FBD_DBI2
FBD_WCK23
FBD_WCK23*
FB_DBI
FBD_DBI[7..0]
FBD_DBI0 FBD_DBI1 FBD_DBI2 FBD_DBI3 FBD_DBI4 FBD_DBI5 FBD_DBI6 FBD_DBI7
FB_EDC
FBD_EDC[7..0]
OUT
FBD_EDC0 FBD_EDC1 FBD_EDC2 FBD_EDC3 FBD_EDC4 FBD_EDC5 FBD_EDC6 FBD_EDC7
FBD_CMD[52..0]
M2C
K4Z80325BC-HC16
FBGA180
COMMON
CA0_A CA1_A CA2_A CA3_A CA4_A CA5_A CA6_A CA7_A CA8_A CA9_A CABI_A CKE_A
FBD_CMD1 FBD_CMD13 FBD_CMD12 FBD_CMD24 FBD_CMD11 FBD_CMD15 FBD_CMD22 FBD_CMD23 FBD_CMD0 FBD_CMD2 FBD_CMD10 FBD_CMD14
H3 G11 G4 H12 H5 H10 J12 J11 J4 J3 J5 G10
CA0_B CA1_B CA2_B CA3_B CA4_B CA5_B CA6_B CA7_B CA8_B CA9_B CABI_B CKE_B
FBD_CMD5 FBD_CMD18 FBD_CMD7 FBD_CMD20 FBD_CMD8 FBD_CMD16 FBD_CMD21 FBD_CMD19 FBD_CMD6 FBD_CMD4 FBD_CMD9 FBD_CMD17
L3 M11 M4 L12 L5 L10 K12 K11 K4 K3 K5 M10
FBD_CMD3
J1
RESET
FBD_CLK0*
FBD_CLK0
K10
J10
CLK_c
CLK_t
VREFC
K1
FBD_VREFC
nv_res
R706
1K/4/1
5%
402
COMMON
TCK TDI TDO TMS
N5 F10 N10 F5
SNN_FBDL_TCK_M
SNN_FBDL_TDI_M
SNN_FBDL_TDO_M
SNN_FBDL_TMS_M
ZQ_A
ZQ_B
J14
K14
FBD_ZQ_1_A
FBD_ZQ_1_B
R691
121/4/1
R686
121/4/1
402
1%
COMMON
RFU_A
RFU_B
G5
M5
SNN_FBDL_RFU_A_M
SNN_FBDL_RFU_B_M
18x 0402 1uF
C825 C263 C829 C869 C933 C807 C262 C917 C257 C849 C880 C935 C934 C903 C255 C790 C806 C875
1u/4/X5R/6.3V/K
1uF/X
6.3V
10%
X6S
402
COMMON
4x 0603 10uF
C797 C816 C904 C905
10u/6/X5R/6.3V/M
4V
20%
603
CLOSE OR UNDER DRAM
6x 0603W 22uF
C771 C858 C867 C891 C857 C814
22u/6/X5R/6.3V/M
0603W
2x 0603 10uF
C895 C827
AROUND DRAM
4x 0402 1uF
C791 C937 C792 C936
CLOSE OR UNDER DRAM

ASSEMBLY
PAGE DETAIL

<ASSEMBLY_DESCRIPTION>
MEMORY: FBD[31:0]

ALL NVIDIA DESIGN SPECIFICATIONS, REFERENCE SPECIFICATIONS, REFERENCE BOARDS, FILES, DRAWINGS, DIAGNOSTICS, LISTS AND OTHER DOCUMENTS OR INFORMATION (TOGETHER AND SEPARATELY, 'MATERIALS') ARE BEING PROVIDED 'AS IS'. THE MATERIALS MAY CONTAIN KNOWN AND UNKNOWN VIOLATIONS OR DEVIATIONS OF INDUSTRY STANDARDS AND SPECIFICATIONS. NVIDIA MAKES NO WARRANTIES, EXPRESSED, IMPLIED, STATUTORY OR OTHERWISE WITH RESPECT TO THE MATERIALS OR OTHERWISE, AND EXPRESSLY DISCLAIMS ALL IMPLIED WARRANTIES INCLUDING, WITHOUT LIMITATION, THE WARRANTIES OF DESIGN, OF NONINFRINGEMENT, MERCHANTABILITY OR FITNESS FOR A PARTICULAR PURPOSE, OR ARISING FROM A COURSE OF DEALING, TRADE USAGE, TRADE PRACTICE, OR INDUSTRY STANDARDS.

GIGABYTE

Title		
Page13: MEMORY: FBD Partition 31..0		
Size Custom	Document Number GV-N3070AORUS M-8GD	Rev 1.0
Date: Tuesday, August 04, 2020	Sheet 13 of 57	

Page14: MEMORY: FBD Partition 63..32

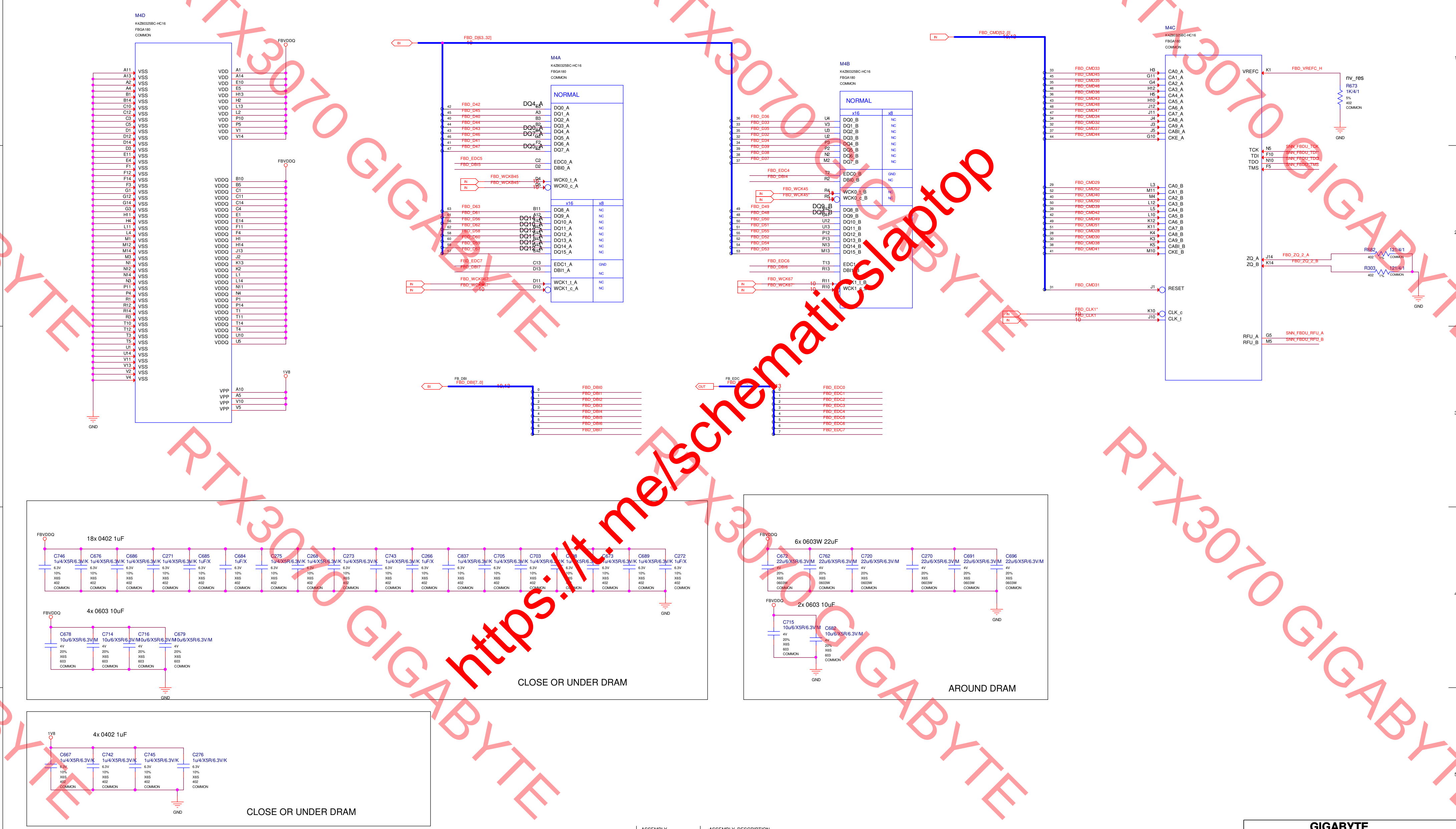

M4D
K4Z80325BC-HC16
FBGA180
COMMON
A11 A13 A2 A4 B1 B14 C10 C12 C3 C5 D1 D12 D14 D3 E11 E4 F1 F12 F14 F3 G1 G12 G14 G3 H11 H4 L11 L4 M1 M12 M14 M3 N1 N12 N14 N3 P11 P4 R1 R12 R14 R3 T10 T12 T3 T5 U1 U14 V11 V13 V2 V4 VSS
GND
FBVDDQ
VDD A1 A14 E10 E5 H13 H2 L13 L2 P10 P5 V1 V14
FBVDDQ
VDDQ B10 B5 C1 C11 C14 C4 E1 E14 F11 F4 H1 H14 J13 J2 K13 K2 L1 L14 N11 N4 P1 P14 T1 T11 T14 T4 U10 U5
1V8
VPP A10 A5 V10 V5
BI
FBD_D[63..32]
10
M4A
K4Z80325BC-HC16
FBGA180
COMMON
NORMAL
42 FBD_D42 E3 DQ0_A
45 FBD_D45 A3 DQ1_A
40 FBD_D40 B3 DQ2_A
44 FBD_D44 B2 DQ3_A
43 FBD_D43 B4 DQ4_A
46 FBD_D46 G2 DQ5_A
41 FBD_D41 F2 DQ6_A
47 FBD_D47 E2 DQ7_A
FBD_EDC5 C2 EDC0_A
FBD_DBI5 D2 DBI0_A
IN FBD_WCKB45 D4 WCK0_t_A
IN FBD_WCKB45* D5 WCK0_c_A
x16 x8
63 FBD_D63 B11 DQ8_A NC
61 FBD_D61 A12 DQ9_A NC
56 FBD_D56 E13 DQ10_A NC
62 FBD_D62 B12 DQ11_A NC
58 FBD_D58 F13 DQ12_A NC
60 FBD_D60 B13 DQ13_A NC
59 FBD_D59 G13 DQ14_A NC
57 FBD_D57 E12 DQ15_A NC
FBD_EDC7 C13 EDC1_A GND
FBD_DBI7 D13 DBI1_A NC
IN FBD_WCKB67 D11 WCK1_t_A NC
IN FBD_WCKB67* D10 WCK1_c_A NC
M4B
K4Z80325BC-HC16
FBGA180
COMMON
NORMAL
x16 x8
36 FBD_D36 U4 DQ0_B NC
33 FBD_D33 V3 DQ1_B NC
35 FBD_D35 U3 DQ2_B NC
32 FBD_D32 U2 DQ3_B NC
34 FBD_D34 P3 DQ4_B NC
39 FBD_D39 P2 DQ5_B NC
38 FBD_D38 N2 DQ6_B NC
37 FBD_D37 M2 DQ7_B NC
FBD_EDC4 T2 EDC0_B GND
FBD_DBI4 R2 DBI0_B NC
IN FBD_WCK45 R4 WCK0_t_B NC
IN FBD_WCK45* R5 WCK0_c_B NC
49 FBD_D49 V12 DQ8_B
48 FBD_D48 U11 DQ9_B
50 FBD_D50 U12 DQ10_B
51 FBD_D51 U13 DQ11_B
55 FBD_D55 P12 DQ12_B
52 FBD_D52 P13 DQ13_B
54 FBD_D54 N13 DQ14_B
53 FBD_D53 M13 DQ15_B
FBD_EDC6 T13 EDC1_B
FBD_DBI6 R13 DBI1_B
IN FBD_WCK67 R11 WCK1_t_B
IN FBD_WCK67* R10 WCK1_c_B
IN
FBD_CMD[52..0]
10,12
M4C
K4Z80325BC-HC16
FBGA180
COMMON
33 FBD_CMD33 H3 CA0_A
45 FBD_CMD45 G11 CA1_A
35 FBD_CMD35 G4 CA2_A
46 FBD_CMD46 H12 CA3_A
36 FBD_CMD36 H5 CA4_A
43 FBD_CMD43 H10 CA5_A
48 FBD_CMD48 J12 CA6_A
47 FBD_CMD47 J11 CA7_A
34 FBD_CMD34 J4 CA8_A
32 FBD_CMD32 J3 CA9_A
37 FBD_CMD37 J5 CABI_A
44 FBD_CMD44 G10 CKE_A
29 FBD_CMD29 L3 CA0_B
52 FBD_CMD52 M11 CA1_B
40 FBD_CMD40 M4 CA2_B
50 FBD_CMD50 L12 CA3_B
39 FBD_CMD39 L5 CA4_B
42 FBD_CMD42 L10 CA5_B
49 FBD_CMD49 K12 CA6_B
51 FBD_CMD51 K11 CA7_B
28 FBD_CMD28 K4 CA8_B
30 FBD_CMD30 K3 CA9_B
38 FBD_CMD38 K5 CABI_B
41 FBD_CMD41 M10 CKE_B
31 FBD_CMD31 J1 RESET
IN FBD_CLK1* K10 CLK_c
IN FBD_CLK1 J10 CLK_t
VREFC K1 FBD_VREFC_H
nv_res
R673
1K/4/1
5%
402
COMMON
GND
TCK N5 SNN_FBDU_TCK
TDI F10 SNN_FBDU_TDI
TDO N10 SNN_FBDU_TDO
TMS F5 SNN_FBDU_TMS
ZQ_A J14 FBD_ZQ_2_A
ZQ_B K14 FBD_ZQ_2_B
R682 121/4/1 402 1% COMMON
R303 121/4/1 402 1% COMMON
GND
RFU_A G5 SNN_FBDU_RFU_A
RFU_B M5 SNN_FBDU_RFU_B
BI
FB_DBI
FBD_DBI[7..0]
10,12
0 FBD_DBI0
1 FBD_DBI1
2 FBD_DBI2
3 FBD_DBI3
4 FBD_DBI4
5 FBD_DBI5
6 FBD_DBI6
7 FBD_DBI7
OUT
FB_EDC
FBD_EDC[7..0]
13
0 FBD_EDC0
1 FBD_EDC1
2 FBD_EDC2
3 FBD_EDC3
4 FBD_EDC4
5 FBD_EDC5
6 FBD_EDC6
7 FBD_EDC7
FBVDDQ
18x 0402 1uF
C746 1u/4/X5R/6.3V/K
C676 1u/4/X5R/6.3V/K
C686 1u/4/X5R/6.3V/K
C271 1u/4/X5R/6.3V/K
C685 1uF/X
C684 1uF/X
C275 1u/4/X5R/6.3V/K
C268 1u/4/X5R/6.3V/K
C273 1u/4/X5R/6.3V/K
C743 1u/4/X5R/6.3V/K
C266 1uF/X
C837 1u/4/X5R/6.3V/K
C705 1u/4/X5R/6.3V/K
C703 1u/4/X5R/6.3V/K
C698 1u/4/X5R/6.3V/K
C673 1u/4/X5R/6.3V/K
C689 1u/4/X5R/6.3V/K
C272 1uF/X
6.3V 10% X6S 402 COMMON
GND
FBVDDQ
4x 0603 10uF
C678 10u/6/X5R/6.3V/M
C714 10u/6/X5R/6.3V/M
C716 10u/6/X5R/6.3V/M
C679 10u/6/X5R/6.3V/M
4V 20% X6S 603 COMMON
GND
CLOSE OR UNDER DRAM
FBVDDQ
6x 0603W 22uF
C672 22u/6/X5R/6.3V/M
C762 22u/6/X5R/6.3V/M
C720 22u/6/X5R/6.3V/M
C270 22u/6/X5R/6.3V/M
C691 22u/6/X5R/6.3V/M
C696 22u/6/X5R/6.3V/M
4V 20% X6S 0603W COMMON
GND
FBVDDQ
2x 0603 10uF
C715 10u/6/X5R/6.3V/M
C682 10u/6/X5R/6.3V/M
4V 20% X6S 603 COMMON
GND
AROUND DRAM
1V8
4x 0402 1uF
C667 1u/4/X5R/6.3V/K
C742 1u/4/X5R/6.3V/K
C745 1u/4/X5R/6.3V/K
C276 1u/4/X5R/6.3V/K
6.3V 10% X6S 402 COMMON
GND
CLOSE OR UNDER DRAM

ASSEMBLY <ASSEMBLY_DESCRIPTION>
PAGE DETAIL MEMORY: FBD[63:32]

ALL NVIDIA DESIGN SPECIFICATIONS, REFERENCE SPECIFICATIONS, REFERENCE BOARDS, FILES, DRAWINGS, DIAGNOSTICS, LISTS AND OTHER DOCUMENTS OR INFORMATION (TOGETHER AND SEPARATELY, 'MATERIALS') ARE BEING PROVIDED 'AS IS'. THE MATERIALS MAY CONTAIN KNOWN AND UNKNOWN VIOLATIONS OR DEVIATIONS OF INDUSTRY STANDARDS AND SPECIFICATIONS. NVIDIA MAKES NO WARRANTIES, EXPRESSED, IMPLIED, STATUTORY OR OTHERWISE WITH RESPECT TO THE MATERIALS OR OTHERWISE, AND EXPRESSLY DISCLAIMS ALL IMPLIED WARRANTIES INCLUDING, WITHOUT LIMITATION, THE WARRANTIES OF DESIGN, OF NONINFRINGEMENT, MERCHANTABILITY OR FITNESS FOR A PARTICULAR PURPOSE, OR ARISING FROM A COURSE OF DEALING, TRADE USAGE, TRADE PRACTICE, OR INDUSTRY STANDARDS.

GIGABYTE

Title
Page14: MEMORY: FBD Partition 63..32

Size	Document Number	Rev
Custom	GV-N3070AORUS M-8GD	1.0

Date: Tuesday, August 04, 2020 Sheet 14 of 57

Page15: GPU PWR and GND

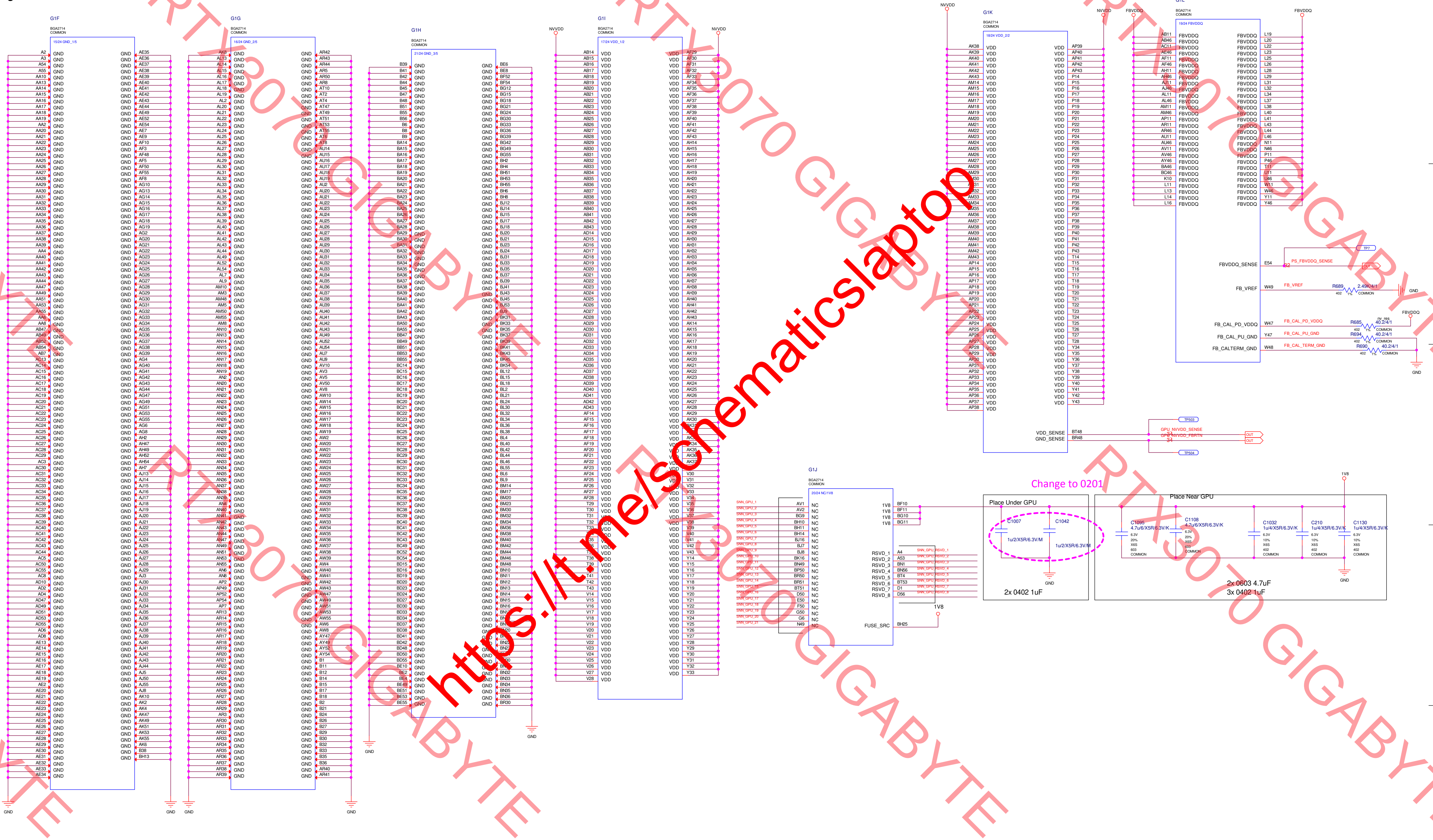
G1F
BGA2714
COMMON
15/24 GND_1/5
G1G
BGA2714
COMMON
16/24 GND_2/5
G1H
BGA2714
COMMON
21/24 GND_3/5
G1I
BGA2714
COMMON
17/24 VDD_1/2
G1K
BGA2714
COMMON
18/24 VDD_2/2
G1L
BGA2714
COMMON
19/24 FBVDDQ
G1J
BGA2714
COMMON
20/24 NC/1V8
GND
VDD
NVVDD
FBVDDQ
FBVDDQ_SENSE
E54
PS_FBVDDQ_SENSE
32
TP7
OUT
FB_VREF
W49
R689
2.49K/4/1
402
1%
COMMON
FB_CAL_PD_VDDQ
W47
FB_CAL_PD_VDDQ
R685
nv_res
40.2/4/1
FB_CAL_PU_GND
Y47
FB_CAL_PU_GND
R694
40.2/4/1
FB_CALTERM_GND
W48
FB_CAL_TERM_GND
R690
40.2/4/1
VDD_SENSE
GND_SENSE
BT48
BR48
TP503
TP504
GPU_NVVDD_SENSE
GPU_NVVDD_FBRTN
34
34
OUT
OUT
1V8
BF10
BF11
BG10
BG11
RSVD_1
RSVD_2
RSVD_3
RSVD_4
RSVD_5
RSVD_6
RSVD_7
RSVD_8
A4
A53
BN1
BN56
BT4
BT53
D1
D56
SNN_GPU_RSVD_1
SNN_GPU_RSVD_2
SNN_GPU_RSVD_3
SNN_GPU_RSVD_4
SNN_GPU_RSVD_5
SNN_GPU_RSVD_6
SNN_GPU_RSVD_7
SNN_GPU_RSVD_8
FUSE_SRC
BH25
NC
AV1
AV2
BG9
BH10
BH11
BH14
BJ16
BJ7
BJ8
BK16
BN49
BP50
BR50
BR51
BT51
D50
E50
F50
G50
G6
N49
SNN_GPU_1
SNN_GPU_2
SNN_GPU_3
SNN_GPU_4
SNN_GPU_5
SNN_GPU_6
SNN_GPU_7
SNN_GPU_8
SNN_GPU_9
SNN_GPU_10
SNN_GPU_11
SNN_GPU_12
SNN_GPU_13
SNN_GPU_14
SNN_GPU_15
SNN_GPU_16
SNN_GPU_17
SNN_GPU_18
SNN_GPU_19
SNN_GPU_20
SNN_GPU_21
Change to 0201
Place Under GPU
C1007
1u/2/X5R/6.3V/M
C1042
1u/2/X5R/6.3V/M
2x 0402 1uF
Place Near GPU
C1095
4.7u/6/X5R/6.3V/K
6.3V
20%
X6S
603
COMMON
C1108
4.7u/6/X5R/6.3V/K
C1032
1u/4/X5R/6.3V/K
10%
402
C210
1u/4/X5R/6.3V/K
C1130
1u/4/X5R/6.3V/K
2x 0603 4.7uF
3x 0402 1uF

ASSEMBLY
PAGE DETAIL

<ASSEMBLY_DESCRIPTION>
GPU PWR & GND
1

ALL NVIDIA DESIGN SPECIFICATIONS, REFERENCE SPECIFICATIONS, REFERENCE BOARDS, FILES, DRAWINGS, DIAGNOSTICS, LISTS AND OTHER DOCUMENTS OR INFORMATION (TOGETHER AND SEPARATELY, 'MATERIALS') ARE BEING PROVIDED 'AS IS'. THE MATERIALS MAY CONTAIN KNOWN AND UNKNOWN VIOLATIONS OR DEVIATIONS OF INDUSTRY STANDARDS AND SPECIFICATIONS. NVIDIA MAKES NO WARRANTIES, EXPRESSED, IMPLIED, STATUTORY OR OTHERWISE WITH RESPECT TO THE MATERIALS OR OTHERWISE, AND EXPRESSLY DISCLAIMS ALL IMPLIED WARRANTIES INCLUDING, WITHOUT LIMITATION, THE WARRANTIES OF DESIGN, OF NONINFRINGEMENT, MERCHANTABILITY OR FITNESS FOR A PARTICULAR PURPOSE, OR ARISING FROM A COURSE OF DEALING, TRADE USAGE, TRADE PRACTICE, OR INDUSTRY STANDARDS.

GIGABYTE

Title
Page15: GPU PWR and GND

Size: Custom
Document Number: GV-N3070AORUS M-8GD
Rev: 1.0
Date: Thursday, August 06, 2020
Sheet 15 of 57

Page16: GPU PWR and GND 2

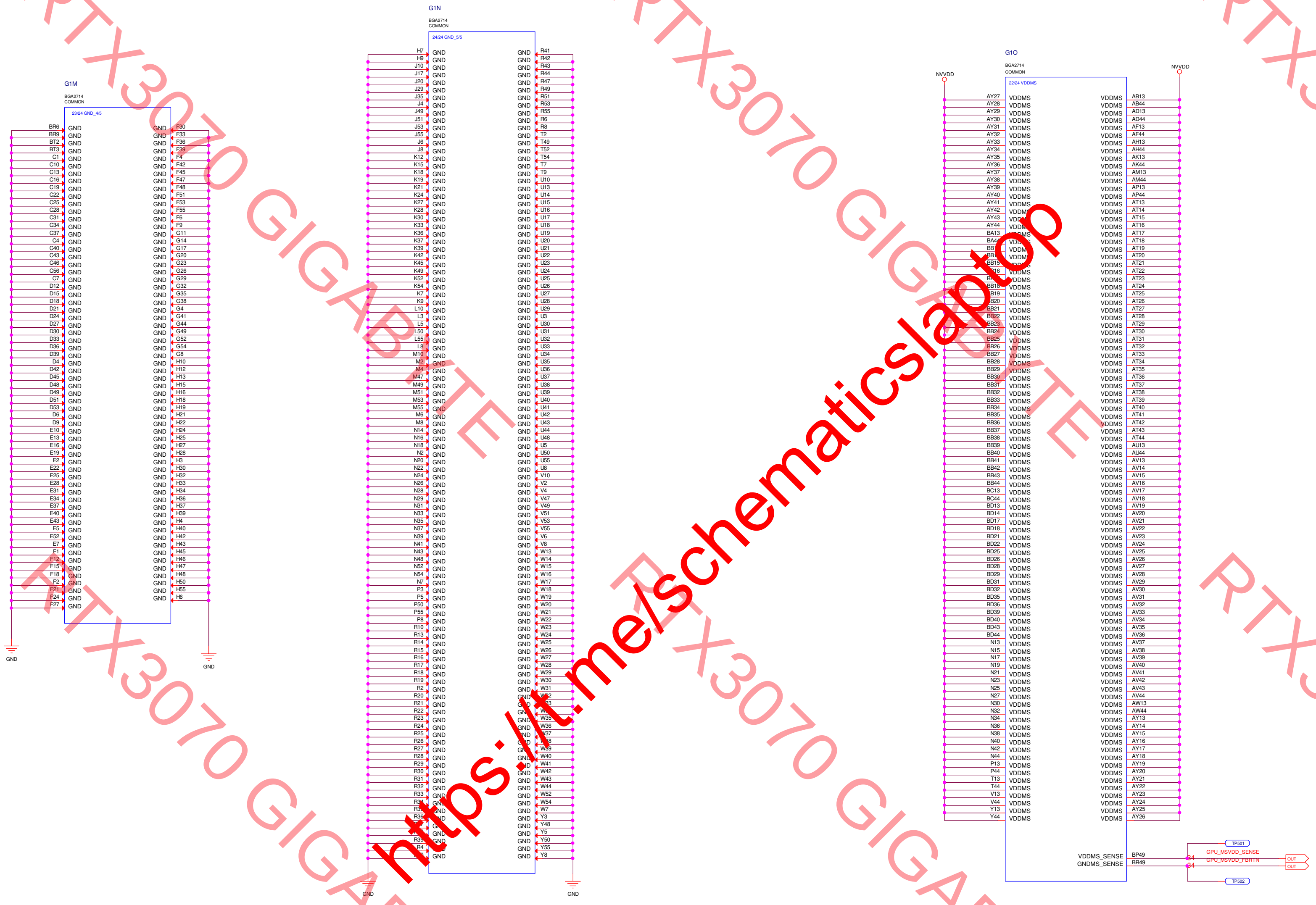
G1M
BGA2714
COMMON
23/24 GND_4/5
BR6 GND GND F30
BR9 GND GND F33
BT2 GND GND F36
BT3 GND GND F39
C1 GND GND F4
C10 GND GND F42
C13 GND GND F45
C16 GND GND F47
C19 GND GND F48
C22 GND GND F51
C25 GND GND F53
C28 GND GND F55
C31 GND GND F6
C34 GND GND F9
C37 GND GND G11
C4 GND GND G14
C40 GND GND G17
C43 GND GND G20
C46 GND GND G23
C56 GND GND G26
C7 GND GND G29
D12 GND GND G32
D15 GND GND G35
D18 GND GND G38
D21 GND GND G4
D24 GND GND G41
D27 GND GND G44
D30 GND GND G49
D33 GND GND G52
D36 GND GND G54
D39 GND GND G8
D4 GND GND H10
D42 GND GND H12
D45 GND GND H13
D48 GND GND H15
D49 GND GND H16
D51 GND GND H18
D53 GND GND H19
D6 GND GND H21
D9 GND GND H22
E10 GND GND H24
E13 GND GND H25
E16 GND GND H27
E19 GND GND H28
E2 GND GND H3
E22 GND GND H30
E25 GND GND H32
E28 GND GND H33
E31 GND GND H34
E34 GND GND H36
E37 GND GND H37
E40 GND GND H39
E43 GND GND H4
E5 GND GND H40
E52 GND GND H42
E7 GND GND H43
F1 GND GND H45
F12 GND GND H46
F15 GND GND H47
F18 GND GND H48
F2 GND GND H50
F21 GND GND H55
F24 GND GND H6
F27 GND
GND
GND
G1N
BGA2714
COMMON
24/24 GND_5/5
H7 GND GND R41
H9 GND GND R42
J10 GND GND R43
J17 GND GND R44
J20 GND GND R47
J29 GND GND R49
J35 GND GND R51
J4 GND GND R53
J49 GND GND R55
J51 GND GND R6
J53 GND GND R8
J55 GND GND T2
J6 GND GND T49
J8 GND GND T52
K12 GND GND T54
K15 GND GND T7
K18 GND GND T9
K19 GND GND U10
K21 GND GND U13
K24 GND GND U14
K27 GND GND U15
K28 GND GND U16
K30 GND GND U17
K33 GND GND U18
K36 GND GND U19
K37 GND GND U20
K39 GND GND U21
K42 GND GND U22
K45 GND GND U23
K49 GND GND U24
K52 GND GND U25
K54 GND GND U26
K7 GND GND U27
K9 GND GND U28
L10 GND GND U29
L3 GND GND U3
L5 GND GND U30
L50 GND GND U31
L55 GND GND U32
L8 GND GND U33
M10 GND GND U34
M2 GND GND U35
M4 GND GND U36
M47 GND GND U37
M49 GND GND U38
M51 GND GND U39
M53 GND GND U40
M55 GND GND U41
M6 GND GND U42
M8 GND GND U43
N14 GND GND U44
N16 GND GND U48
N18 GND GND U5
N2 GND GND U50
N20 GND GND U55
N22 GND GND U8
N24 GND GND V10
N26 GND GND V2
N28 GND GND V4
N29 GND GND V47
N31 GND GND V49
N33 GND GND V51
N35 GND GND V53
N37 GND GND V55
N39 GND GND V6
N41 GND GND V8
N43 GND GND W13
N48 GND GND W14
N52 GND GND W15
N54 GND GND W16
N7 GND GND W17
P3 GND GND W18
P5 GND GND W19
P50 GND GND W20
P55 GND GND W21
P8 GND GND W22
R10 GND GND W23
R13 GND GND W24
R14 GND GND W25
R15 GND GND W26
R16 GND GND W27
R17 GND GND W28
R18 GND GND W29
R19 GND GND W30
R2 GND GND W31
R20 GND GND W32
R21 GND GND W33
R22 GND GND
R23 GND GND W35
R24 GND GND W36
R25 GND GND W37
R26 GND GND W38
R27 GND GND W39
R28 GND GND W40
R29 GND GND W41
R30 GND GND W42
R31 GND GND W43
R32 GND GND W44
R33 GND GND W52
R34 GND GND W54
GND GND W7
R36 GND GND Y3
GND Y48
GND GND Y5
R39 GND GND Y50
R4 GND Y55
GND GND Y8
GND
GND
G1O
BGA2714
COMMON
22/24 VDDMS
NVVDD
NVVDD
AY27 VDDMS VDDMS AB13
AY28 VDDMS VDDMS AB44
AY29 VDDMS VDDMS AD13
AY30 VDDMS VDDMS AD44
AY31 VDDMS VDDMS AF13
AY32 VDDMS VDDMS AF44
AY33 VDDMS VDDMS AH13
AY34 VDDMS VDDMS AH44
AY35 VDDMS VDDMS AK13
AY36 VDDMS VDDMS AK44
AY37 VDDMS VDDMS AM13
AY38 VDDMS VDDMS AM44
AY39 VDDMS VDDMS AP13
AY40 VDDMS VDDMS AP44
AY41 VDDMS VDDMS AT13
AY42 VDDMS VDDMS AT14
AY43 VDDMS AT15
AY44 VDDMS AT16
BA13 VDDMS AT17
VDDMS AT18
VDDMS AT19
VDDMS AT20
BB15 VDDMS AT21
VDDMS VDDMS AT22
VDDMS VDDMS AT23
BB18 VDDMS VDDMS AT24
VDDMS VDDMS AT25
VDDMS VDDMS AT26
BB21 VDDMS VDDMS AT27
BB22 VDDMS VDDMS AT28
BB23 VDDMS VDDMS AT29
BB24 VDDMS VDDMS AT30
BB25 VDDMS VDDMS AT31
BB26 VDDMS VDDMS AT32
BB27 VDDMS VDDMS AT33
BB28 VDDMS VDDMS AT34
BB29 VDDMS VDDMS AT35
BB30 VDDMS VDDMS AT36
BB31 VDDMS VDDMS AT37
BB32 VDDMS VDDMS AT38
BB33 VDDMS VDDMS AT39
BB34 VDDMS VDDMS AT40
BB35 VDDMS VDDMS AT41
BB36 VDDMS VDDMS AT42
BB37 VDDMS VDDMS AT43
BB38 VDDMS VDDMS AT44
BB39 VDDMS VDDMS AU13
BB40 VDDMS VDDMS AU44
BB41 VDDMS VDDMS AV13
BB42 VDDMS VDDMS AV14
BB43 VDDMS VDDMS AV15
BB44 VDDMS VDDMS AV16
BC13 VDDMS VDDMS AV17
BC44 VDDMS VDDMS AV18
BD13 VDDMS VDDMS AV19
BD14 VDDMS VDDMS AV20
BD17 VDDMS VDDMS AV21
BD18 VDDMS VDDMS AV22
BD21 VDDMS VDDMS AV23
BD22 VDDMS VDDMS AV24
BD25 VDDMS VDDMS AV25
BD26 VDDMS VDDMS AV26
BD28 VDDMS VDDMS AV27
BD29 VDDMS VDDMS AV28
BD31 VDDMS VDDMS AV29
BD32 VDDMS VDDMS AV30
BD35 VDDMS VDDMS AV31
BD36 VDDMS VDDMS AV32
BD39 VDDMS VDDMS AV33
BD40 VDDMS VDDMS AV34
BD43 VDDMS VDDMS AV35
BD44 VDDMS VDDMS AV36
N13 VDDMS VDDMS AV37
N15 VDDMS VDDMS AV38
N17 VDDMS VDDMS AV39
N19 VDDMS VDDMS AV40
N21 VDDMS VDDMS AV41
N23 VDDMS VDDMS AV42
N25 VDDMS VDDMS AV43
N27 VDDMS VDDMS AV44
N30 VDDMS VDDMS AW13
N32 VDDMS VDDMS AW44
N34 VDDMS VDDMS AY13
N36 VDDMS VDDMS AY14
N38 VDDMS VDDMS AY15
N40 VDDMS VDDMS AY16
N42 VDDMS VDDMS AY17
N44 VDDMS VDDMS AY18
P13 VDDMS VDDMS AY19
P44 VDDMS VDDMS AY20
T13 VDDMS VDDMS AY21
T44 VDDMS VDDMS AY22
V13 VDDMS VDDMS AY23
V44 VDDMS VDDMS AY24
Y13 VDDMS VDDMS AY25
Y44 VDDMS VDDMS AY26
VDDMS_SENSE BP49
GNDMS_SENSE BR49
TP501
GPU_MSVDD_SENSE
GPU_MSVDD_FBRTN
34
34
OUT
OUT
TP502

ASSEMBLY <ASSEMBLY_DESCRIPTION>
PAGE DETAIL GPU PWR & GND
2

ALL NVIDIA DESIGN SPECIFICATIONS, REFERENCE SPECIFICATIONS, REFERENCE BOARDS, FILES, DRAWINGS, DIAGNOSTICS, LISTS AND OTHER DOCUMENTS OR INFORMATION (TOGETHER AND SEPARATELY, 'MATERIALS') ARE BEING PROVIDED 'AS IS'. THE MATERIALS MAY CONTAIN KNOWN AND UNKNOWN VIOLATIONS OR DEVIATIONS OF INDUSTRY STANDARDS AND SPECIFICATIONS. NVIDIA MAKES NO WARRANTIES, EXPRESSED, IMPLIED, STATUTORY OR OTHERWISE WITH RESPECT TO THE MATERIALS OR OTHERWISE, AND EXPRESSLY DISCLAIMS ALL IMPLIED WARRANTIES INCLUDING, WITHOUT LIMITATION, THE WARRANTIES OF DESIGN, OF NONINFRINGEMENT, MERCHANTABILITY OR FITNESS FOR A PARTICULAR PURPOSE, OR ARISING FROM A COURSE OF DEALING, TRADE USAGE, TRADE PRACTICE, OR INDUSTRY STANDARDS.

GIGABYTE

Title
Page16: GPU PWR and GND 2

Size	Document Number	Rev
Custom	GV-N3070AORUS M-8GD	1.0

Date: Thursday, August 06, 2020 Sheet 16 of 57

Page17: XVDD

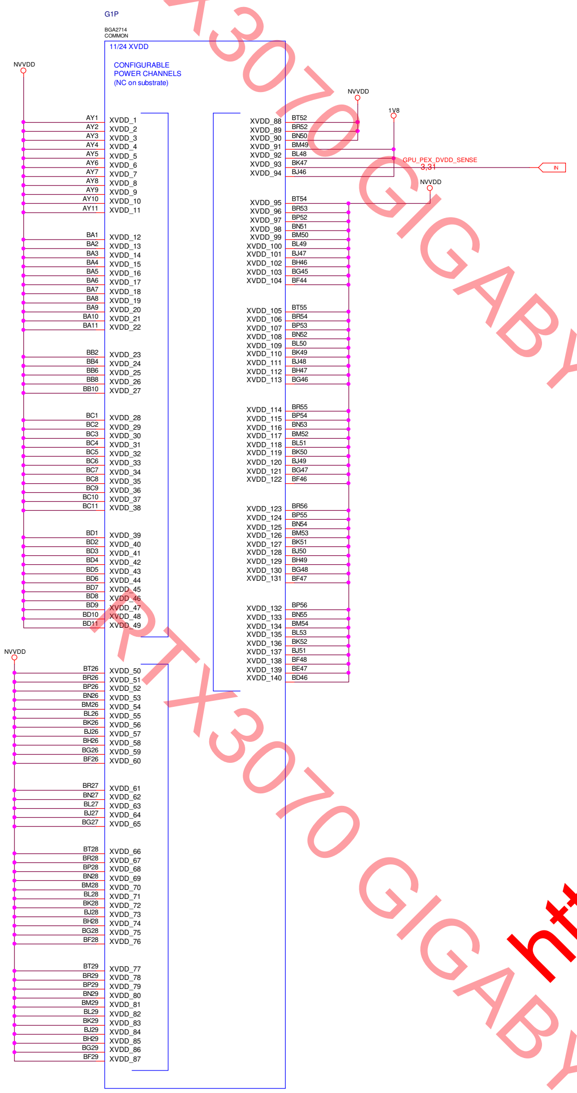
G1P
BGA2714
COMMON
11/24 XVDD
CONFIGURABLE
POWER CHANNELS
(NC on substrate)
NVVDD
AY1 XVDD_1
AY2 XVDD_2
AY3 XVDD_3
AY4 XVDD_4
AY5 XVDD_5
AY6 XVDD_6
AY7 XVDD_7
AY8 XVDD_8
AY9 XVDD_9
AY10 XVDD_10
AY11 XVDD_11
BA1 XVDD_12
BA2 XVDD_13
BA3 XVDD_14
BA4 XVDD_15
BA5 XVDD_16
BA6 XVDD_17
BA7 XVDD_18
BA8 XVDD_19
BA9 XVDD_20
BA10 XVDD_21
BA11 XVDD_22
BB2 XVDD_23
BB4 XVDD_24
BB6 XVDD_25
BB8 XVDD_26
BB10 XVDD_27
BC1 XVDD_28
BC2 XVDD_29
BC3 XVDD_30
BC4 XVDD_31
BC5 XVDD_32
BC6 XVDD_33
BC7 XVDD_34
BC8 XVDD_35
BC9 XVDD_36
BC10 XVDD_37
BC11 XVDD_38
BD1 XVDD_39
BD2 XVDD_40
BD3 XVDD_41
BD4 XVDD_42
BD5 XVDD_43
BD6 XVDD_44
BD7 XVDD_45
BD8 XVDD_46
BD9 XVDD_47
BD10 XVDD_48
BD11 XVDD_49
NVVDD
BT26 XVDD_50
BR26 XVDD_51
BP26 XVDD_52
BN26 XVDD_53
BM26 XVDD_54
BL26 XVDD_55
BK26 XVDD_56
BJ26 XVDD_57
BH26 XVDD_58
BG26 XVDD_59
BF26 XVDD_60
BR27 XVDD_61
BN27 XVDD_62
BL27 XVDD_63
BJ27 XVDD_64
BG27 XVDD_65
BT28 XVDD_66
BR28 XVDD_67
BP28 XVDD_68
BN28 XVDD_69
BM28 XVDD_70
BL28 XVDD_71
BK28 XVDD_72
BJ28 XVDD_73
BH28 XVDD_74
BG28 XVDD_75
BF28 XVDD_76
BT29 XVDD_77
BR29 XVDD_78
BP29 XVDD_79
BN29 XVDD_80
BM29 XVDD_81
BL29 XVDD_82
BK29 XVDD_83
BJ29 XVDD_84
BH29 XVDD_85
BG29 XVDD_86
BF29 XVDD_87
NVVDD
1V8
XVDD_88 BT52
XVDD_89 BR52
XVDD_90 BN50
XVDD_91 BM49
XVDD_92 BL48
XVDD_93 BK47
XVDD_94 BJ46
GPU_PEX_DVDD_SENSE
3,31
IN
NVVDD
XVDD_95 BT54
XVDD_96 BR53
XVDD_97 BP52
XVDD_98 BN51
XVDD_99 BM50
XVDD_100 BL49
XVDD_101 BJ47
XVDD_102 BH46
XVDD_103 BG45
XVDD_104 BF44
XVDD_105 BT55
XVDD_106 BR54
XVDD_107 BP53
XVDD_108 BN52
XVDD_109 BL50
XVDD_110 BK49
XVDD_111 BJ48
XVDD_112 BH47
XVDD_113 BG46
XVDD_114 BR55
XVDD_115 BP54
XVDD_116 BN53
XVDD_117 BM52
XVDD_118 BL51
XVDD_119 BK50
XVDD_120 BJ49
XVDD_121 BG47
XVDD_122 BF46
XVDD_123 BR56
XVDD_124 BP55
XVDD_125 BN54
XVDD_126 BM53
XVDD_127 BK51
XVDD_128 BJ50
XVDD_129 BH49
XVDD_130 BG48
XVDD_131 BF47
XVDD_132 BP56
XVDD_133 BN55
XVDD_134 BM54
XVDD_135 BL53
XVDD_136 BK52
XVDD_137 BJ51
XVDD_138 BF48
XVDD_139 BE47
XVDD_140 BD46

ASSEMBLY <ASSEMBLY_DESCRIPTION>

PAGE DETAIL GPU PWR & GND 3 (XVDD)

ALL NVIDIA DESIGN SPECIFICATIONS, REFERENCE SPECIFICATIONS, REFERENCE BOARDS, FILES, DRAWINGS, DIAGNOSTICS, LISTS AND OTHER DOCUMENTS OR INFORMATION (TOGETHER AND SEPARATELY, 'MATERIALS') ARE BEING PROVIDED 'AS IS'. THE MATERIALS MAY CONTAIN KNOWN AND UNKNOWN VIOLATIONS OR DEVIATIONS OF INDUSTRY STANDARDS AND SPECIFICATIONS. NVIDIA MAKES NO WARRANTIES, EXPRESSED, IMPLIED, STATUTORY OR OTHERWISE WITH RESPECT TO THE MATERIALS OR OTHERWISE, AND EXPRESSLY DISCLAIMS ALL IMPLIED WARRANTIES INCLUDING, WITHOUT LIMITATION, THE WARRANTIES OF DESIGN, OF NONINFRINGEMENT, MERCHANTABILITY OR FITNESS FOR A PARTICULAR PURPOSE, OR ARISING FROM A COURSE OF DEALING, TRADE USAGE, TRADE PRACTICE, OR INDUSTRY STANDARDS.

GIGABYTE

Title
Page17: XVDD

Size Custom
Document Number GV-N3070AORUS M-8GD
Rev 1.0

Date: Thursday, August 06, 2020
Sheet 17 of 57

Page18: GPU DECOUPLING FBVDDQ

FBVDDQ

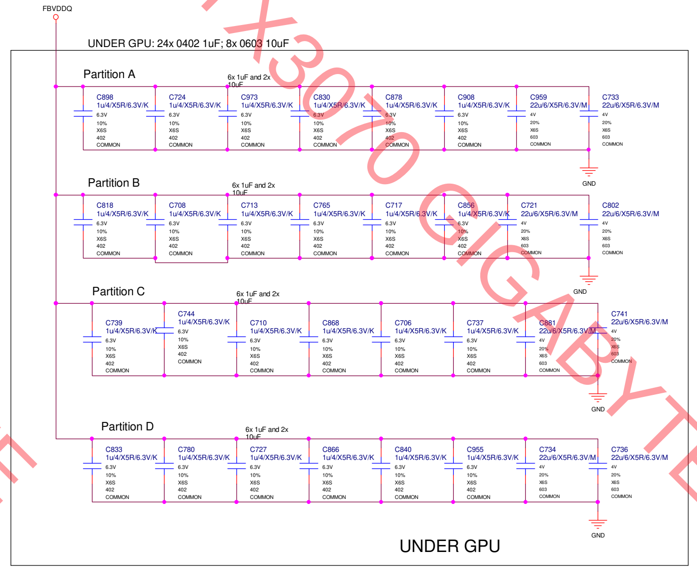
FBVDDQ
UNDER GPU: 24x 0402 1uF; 8x 0603 10uF
Partition A
6x 1uF and 2x 10uF
C898 1u/4/X5R/6.3V/K
C724 1u/4/X5R/6.3V/K
C973 1u/4/X5R/6.3V/K
C830 1u/4/X5R/6.3V/K
C878 1u/4/X5R/6.3V/K
C908 1u/4/X5R/6.3V/K
C959 22u/6/X5R/6.3V/M
C733 22u/6/X5R/6.3V/M
6.3V
10%
X6S
402
COMMON
4V
20%
X6S
603
COMMON
GND
Partition B
6x 1uF and 2x 10uF
C818 1u/4/X5R/6.3V/K
C708 1u/4/X5R/6.3V/K
C713 1u/4/X5R/6.3V/K
C765 1u/4/X5R/6.3V/K
C717 1u/4/X5R/6.3V/K
C856 1u/4/X5R/6.3V/K
C721 22u/6/X5R/6.3V/M
C802 22u/6/X5R/6.3V/M
GND
Partition C
6x 1uF and 2x 10uF
C739 1u/4/X5R/6.3V/K
C744 1u/4/X5R/6.3V/K
C710 1u/4/X5R/6.3V/K
C868 1u/4/X5R/6.3V/K
C706 1u/4/X5R/6.3V/K
C737 1u/4/X5R/6.3V/K
C881 22u/6/X5R/6.3V/M
C741 22u/6/X5R/6.3V/M
GND
Partition D
6x 1uF and 2x 10uF
C833 1u/4/X5R/6.3V/K
C780 1u/4/X5R/6.3V/K
C727 1u/4/X5R/6.3V/K
C866 1u/4/X5R/6.3V/K
C840 1u/4/X5R/6.3V/K
C955 1u/4/X5R/6.3V/K
C734 22u/6/X5R/6.3V/M
C736 22u/6/X5R/6.3V/M
GND
UNDER GPU

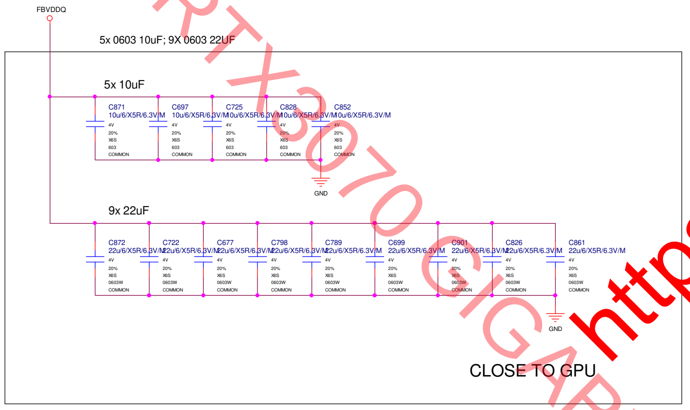
FBVDDQ
5x 0603 10uF; 9X 0603 22UF
5x 10uF
C871 10u/6/X5R/6.3V/M
C697 10u/6/X5R/6.3V/M
C725 10u/6/X5R/6.3V/M
C828 10u/6/X5R/6.3V/M
C852 10u/6/X5R/6.3V/M
4V
20%
X6S
603
COMMON
GND
9x 22uF
C872 22u/6/X5R/6.3V/M
C722 22u/6/X5R/6.3V/M
C677 22u/6/X5R/6.3V/M
C798 22u/6/X5R/6.3V/M
C789 22u/6/X5R/6.3V/M
C699 22u/6/X5R/6.3V/M
C901 22u/6/X5R/6.3V/M
C826 22u/6/X5R/6.3V/M
C861 22u/6/X5R/6.3V/M
4V
20%
X6S
0603W
COMMON
GND
CLOSE TO GPU

ASSEMBLY	<ASSEMBLY_DESCRIPTION>
PAGE DETAIL	GPU DECOUPLING FBVDDQ

ALL NVIDIA DESIGN SPECIFICATIONS, REFERENCE SPECIFICATIONS, REFERENCE BOARDS, FILES, DRAWINGS, DIAGNOSTICS, LISTS AND OTHER DOCUMENTS OR INFORMATION (TOGETHER AND SEPARATELY, 'MATERIALS') ARE BEING PROVIDED 'AS IS'. THE MATERIALS MAY CONTAIN KNOWN AND UNKNOWN VIOLATIONS OR DEVIATIONS OF INDUSTRY STANDARDS AND SPECIFICATIONS. NVIDIA MAKES NO WARRANTIES, EXPRESSED, IMPLIED, STATUTORY OR OTHERWISE WITH RESPECT TO THE MATERIALS OR OTHERWISE, AND EXPRESSLY DISCLAIMS ALL IMPLIED WARRANTIES INCLUDING, WITHOUT LIMITATION, THE WARRANTIES OF DESIGN, OF NONINFRINGEMENT, MERCHANTABILITY OR FITNESS FOR A PARTICULAR PURPOSE, OR ARISING FROM A COURSE OF DEALING, TRADE USAGE, TRADE PRACTICE, OR INDUSTRY STANDARDS.

GIGABYTE

Title
Page18: GPU DECOUPLING FBVDDQ

Size Custom
Document Number GV-N3070AORUS M-8GD
Rev 1.0

Date: Tuesday, August 04, 2020 Sheet 18 of 57

Page19: GPU DECOUPLING NVVDD

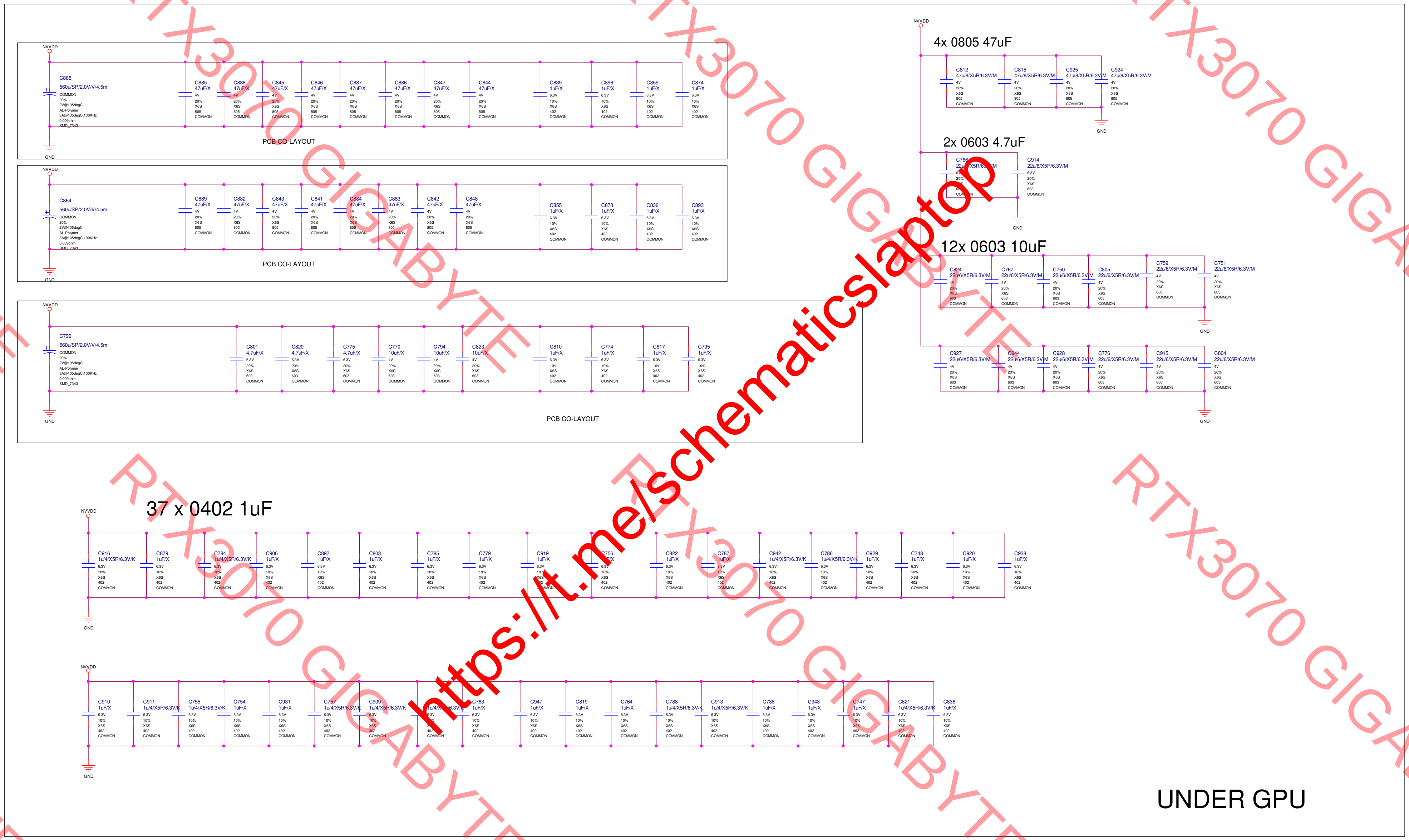
NVVDD
GND
C865 560u/SP/2.0V/V/4.5m COMMON 20% 2V@105degC AL-Polymer 3A@105degC,100KHz 0.009ohm SMD_7343
C885 47uF/X 4V 20% X6S 805 COMMON
C888 47uF/X
C845 47uF/X
C846 47uF/X
C887 47uF/X
C886 47uF/X
C847 47uF/X
C844 47uF/X
C839 1uF/X 6.3V 10% X6S 402 COMMON
C896 1uF/X
C859 1uF/X
C874 1uF/X
PCB CO-LAYOUT
C864 560u/SP/2.0V/V/4.5m COMMON 20% 2V@105degC AL-Polymer 3A@105degC,100KHz 0.009ohm SMD_7343
C889 47uF/X
C882 47uF/X
C843 47uF/X
C841 47uF/X
C884 47uF/X
C883 47uF/X
C842 47uF/X
C848 47uF/X
C855 1uF/X
C873 1uF/X
C836 1uF/X
C893 1uF/X
PCB CO-LAYOUT
C799 560u/SP/2.0V/V/4.5m COMMON 20% 2V@105degC AL-Polymer 3A@105degC,100KHz 0.009ohm SMD_7343
C801 4.7uF/X 6.3V 20% X6S 603 COMMON
C820 4.7uF/X
C775 4.7uF/X
C770 10uF/X 4V 20% X6S 603 COMMON
C794 10uF/X
C823 10uF/X
C810 1uF/X
C774 1uF/X
C817 1uF/X
C795 1uF/X
PCB CO-LAYOUT
4x 0805 47uF
C812 47u/8/X5R/6.3V/M 4V 20% X6S 805 COMMON
C815 47u/8/X5R/6.3V/M
C925 47u/8/X5R/6.3V/M
C924 47u/8/X5R/6.3V/M
2x 0603 4.7uF
C766 22u/6/X5R/6.3V/M
C914 22u/6/X5R/6.3V/M 6.3V 20% X6S 603 COMMON
12x 0603 10uF
C824 22u/6/X5R/6.3V/M 4V 20% X6S 603 COMMON
C767 22u/6/X5R/6.3V/M
C750 22u/6/X5R/6.3V/M
C805 22u/6/X5R/6.3V/M
C759 22u/6/X5R/6.3V/M
C751 22u/6/X5R/6.3V/M
C927 22u/6/X5R/6.3V/M
C944 22u/6/X5R/6.3V/M
C928 22u/6/X5R/6.3V/M
C776 22u/6/X5R/6.3V/M
C915 22u/6/X5R/6.3V/M
C804 22u/6/X5R/6.3V/M
37 x 0402 1uF
C916 1u/4/X5R/6.3V/K 6.3V 10% X6S 402 COMMON
C879 1uF/X
C784 1u/4/X5R/6.3V/K
C906 1uF/X
C897 1uF/X
C803 1uF/X
C785 1uF/X
C779 1uF/X
C919 1uF/X
C756 1uF/X
C822 1uF/X
C787 1uF/X
C942 1u/4/X5R/6.3V/K
C786 1u/4/X5R/6.3V/K
C929 1uF/X
C748 1uF/X
C920 1uF/X
C938 1uF/X
C910 1uF/X
C911 1u/4/X5R/6.3V/K
C755 1u/4/X5R/6.3V/K
C754 1uF/X
C931 1uF/X
C757 1u/4/X5R/6.3V/K
C909 1u/4/X5R/6.3V/K
1u/4/X5R/6.3V/K
C763 1uF/X
C947 1uF/X
C819 1uF/X
C764 1uF/X
C788 1u/4/X5R/6.3V/K
C913 1u/4/X5R/6.3V/K
C738 1uF/X
C943 1uF/X
C747 1uF/X
C821 1u/4/X5R/6.3V/K
C838 1uF/X
UNDER GPU

ASSEMBLY <ASSEMBLY_DESCRIPTION>
PAGE DETAIL GPU DECOUPLING NVVDD

ALL NVIDIA DESIGN SPECIFICATIONS, REFERENCE SPECIFICATIONS, REFERENCE BOARDS, FILES, DRAWINGS, DIAGNOSTICS, LISTS AND OTHER DOCUMENTS OR INFORMATION (TOGETHER AND SEPARATELY, 'MATERIALS') ARE BEING PROVIDED 'AS IS'. THE MATERIALS MAY CONTAIN KNOWN AND UNKNOWN VIOLATIONS OR DEVIATIONS OF INDUSTRY STANDARDS AND SPECIFICATIONS. NVIDIA MAKES NO WARRANTIES, EXPRESSED, IMPLIED, STATUTORY OR OTHERWISE WITH RESPECT TO THE MATERIALS OR OTHERWISE, AND EXPRESSLY DISCLAIMS ALL IMPLIED WARRANTIES INCLUDING, WITHOUT LIMITATION, THE WARRANTIES OF DESIGN, OF NONINFRINGEMENT, MERCHANTABILITY OR FITNESS FOR A PARTICULAR PURPOSE, OR ARISING FROM A COURSE OF DEALING, TRADE USAGE, TRADE PRACTICE, OR INDUSTRY STANDARDS.

GIGABYTE
Title: Page19: GPU DECOUPLING NVVDD
Size: Custom
Document Number: GV-N3070AORUS M-8GD
Rev: 1.0
Date: Tuesday, August 04, 2020
Sheet 19 of 57

Page20: GPU DECOUPLING NVVDD

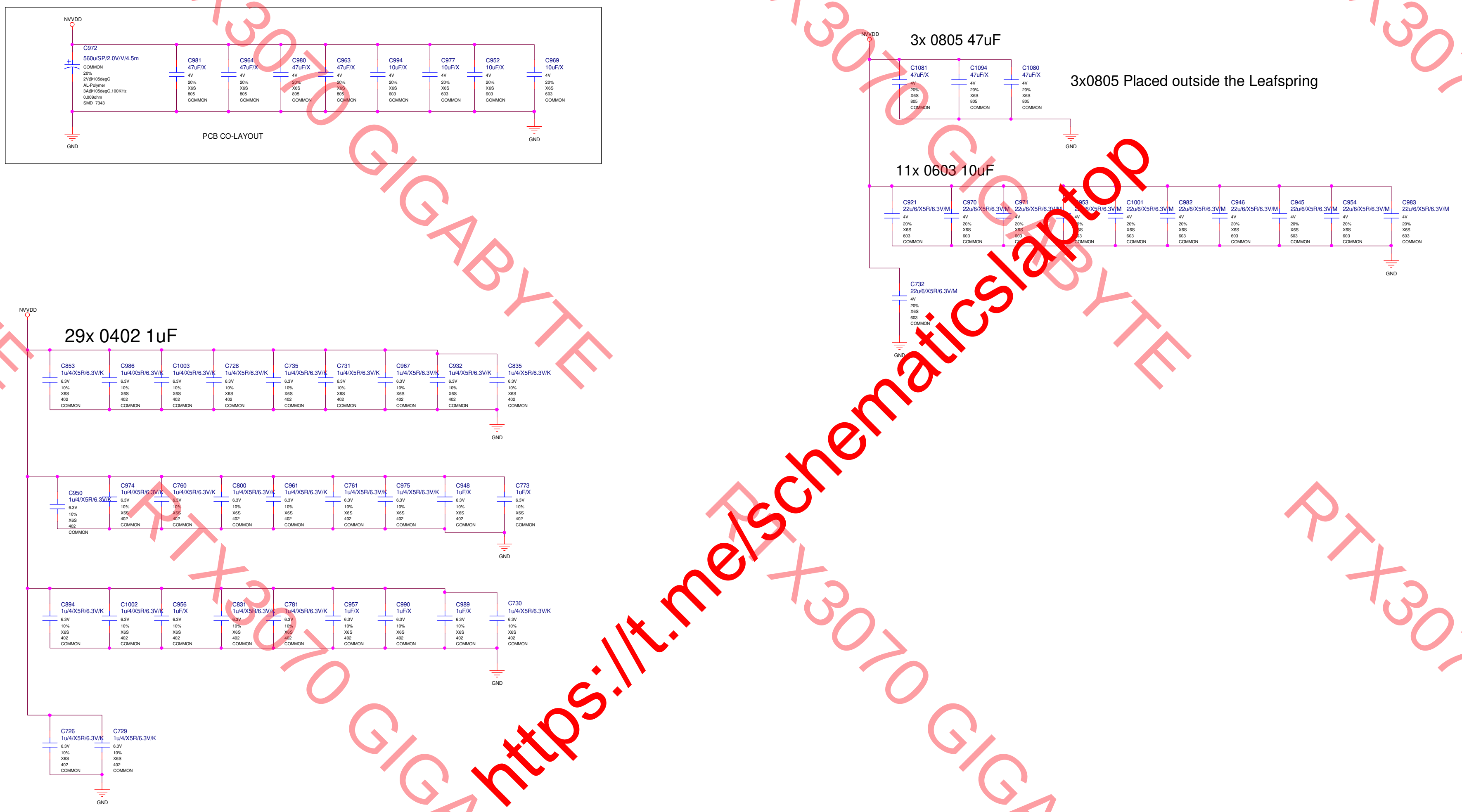
NVVDD
C972 560u/SP/2.0V/V/4.5m COMMON 20% 2V@105degC AL-Polymer 3A@105degC,100KHz 0.009ohm SMD_7343
C981 47uF/X 4V 20% X6S 805 COMMON
C964 47uF/X 4V 20% X6S 805 COMMON
C980 47uF/X 4V 20% X6S 805 COMMON
C963 47uF/X 4V 20% X6S 805 COMMON
C994 10uF/X 4V 20% X6S 603 COMMON
C977 10uF/X 4V 20% X6S 603 COMMON
C952 10uF/X 4V 20% X6S 603 COMMON
C969 10uF/X 4V 20% X6S 603 COMMON
GND
PCB CO-LAYOUT
GND
NVVDD
3x 0805 47uF
C1081 47uF/X 4V 20% X6S 805 COMMON
C1094 47uF/X 4V 20% X6S 805 COMMON
C1080 47uF/X 4V 20% X6S 805 COMMON
3x0805 Placed outside the Leafspring
GND
11x 0603 10uF
C921 22u/6/X5R/6.3V/M 4V 20% X6S 603 COMMON
C970 22u/6/X5R/6.3V/M 4V 20% X6S 603 COMMON
C971 22u/6/X5R/6.3V/M 4V 20% X6S 603 COMMON
C953 22u/6/X5R/6.3V/M 4V 20% X6S 603 COMMON
C1001 22u/6/X5R/6.3V/M 4V 20% X6S 603 COMMON
C982 22u/6/X5R/6.3V/M 4V 20% X6S 603 COMMON
C946 22u/6/X5R/6.3V/M 4V 20% X6S 603 COMMON
C945 22u/6/X5R/6.3V/M 4V 20% X6S 603 COMMON
C954 22u/6/X5R/6.3V/M 4V 20% X6S 603 COMMON
C983 22u/6/X5R/6.3V/M 4V 20% X6S 603 COMMON
GND
C732 22u/6/X5R/6.3V/M 4V 20% X6S 603 COMMON
GND
NVVDD
29x 0402 1uF
C853 1u/4/X5R/6.3V/K 6.3V 10% X6S 402 COMMON
C986 1u/4/X5R/6.3V/K 6.3V 10% X6S 402 COMMON
C1003 1u/4/X5R/6.3V/K 6.3V 10% X6S 402 COMMON
C728 1u/4/X5R/6.3V/K 6.3V 10% X6S 402 COMMON
C735 1u/4/X5R/6.3V/K 6.3V 10% X6S 402 COMMON
C731 1u/4/X5R/6.3V/K 6.3V 10% X6S 402 COMMON
C967 1u/4/X5R/6.3V/K 6.3V 10% X6S 402 COMMON
C932 1u/4/X5R/6.3V/K 6.3V 10% X6S 402 COMMON
C835 1u/4/X5R/6.3V/K 6.3V 10% X6S 402 COMMON
GND
C950 1u/4/X5R/6.3V/K 6.3V 10% X6S 402 COMMON
C974 1u/4/X5R/6.3V/K 6.3V 10% X6S 402 COMMON
C760 1u/4/X5R/6.3V/K 6.3V 10% X6S 402 COMMON
C800 1u/4/X5R/6.3V/K 6.3V 10% X6S 402 COMMON
C961 1u/4/X5R/6.3V/K 6.3V 10% X6S 402 COMMON
C761 1u/4/X5R/6.3V/K 6.3V 10% X6S 402 COMMON
C975 1u/4/X5R/6.3V/K 6.3V 10% X6S 402 COMMON
C948 1uF/X 6.3V 10% X6S 402 COMMON
C773 1uF/X 6.3V 10% X6S 402 COMMON
GND
C894 1u/4/X5R/6.3V/K 6.3V 10% X6S 402 COMMON
C1002 1u/4/X5R/6.3V/K 6.3V 10% X6S 402 COMMON
C956 1uF/X 6.3V 10% X6S 402 COMMON
C831 1u/4/X5R/6.3V/K 6.3V 10% X6S 402 COMMON
C781 1u/4/X5R/6.3V/K 6.3V 10% X6S 402 COMMON
C957 1uF/X 6.3V 10% X6S 402 COMMON
C990 1uF/X 6.3V 10% X6S 402 COMMON
C989 1uF/X 6.3V 10% X6S 402 COMMON
C730 1u/4/X5R/6.3V/K 6.3V 10% X6S 402 COMMON
GND
C726 1u/4/X5R/6.3V/K 6.3V 10% X6S 402 COMMON
C729 1u/4/X5R/6.3V/K 6.3V 10% X6S 402 COMMON
GND

UNDER GPU

ASSEMBLY <ASSEMBLY_DESCRIPTION>
PAGE DETAIL GPU DECOUPLING NVVDD

ALL NVIDIA DESIGN SPECIFICATIONS, REFERENCE SPECIFICATIONS, REFERENCE BOARDS, FILES, DRAWINGS, DIAGNOSTICS, LISTS AND OTHER DOCUMENTS OR INFORMATION (TOGETHER AND SEPARATELY, 'MATERIALS') ARE BEING PROVIDED 'AS IS'. THE MATERIALS MAY CONTAIN KNOWN AND UNKNOWN VIOLATIONS OR DEVIATIONS OF INDUSTRY STANDARDS AND SPECIFICATIONS. NVIDIA MAKES NO WARRANTIES, EXPRESSED, IMPLIED, STATUTORY OR OTHERWISE WITH RESPECT TO THE MATERIALS OR OTHERWISE, AND EXPRESSLY DISCLAIMS ALL IMPLIED WARRANTIES INCLUDING, WITHOUT LIMITATION, THE WARRANTIES OF DESIGN, OF NONINFRINGEMENT, MERCHANTABILITY OR FITNESS FOR A PARTICULAR PURPOSE, OR ARISING FROM A COURSE OF DEALING, TRADE USAGE, TRADE PRACTICE, OR INDUSTRY STANDARDS.

GIGABYTE
Title
Page20: GPU DECOUPLING NVVDD
Size Custom
Document Number GV-N3070AORUS M-8GD
Rev 1.0
Date: Tuesday, August 04, 2020
Sheet 20 of 57

Page21: IFPAB DVI-D-DL

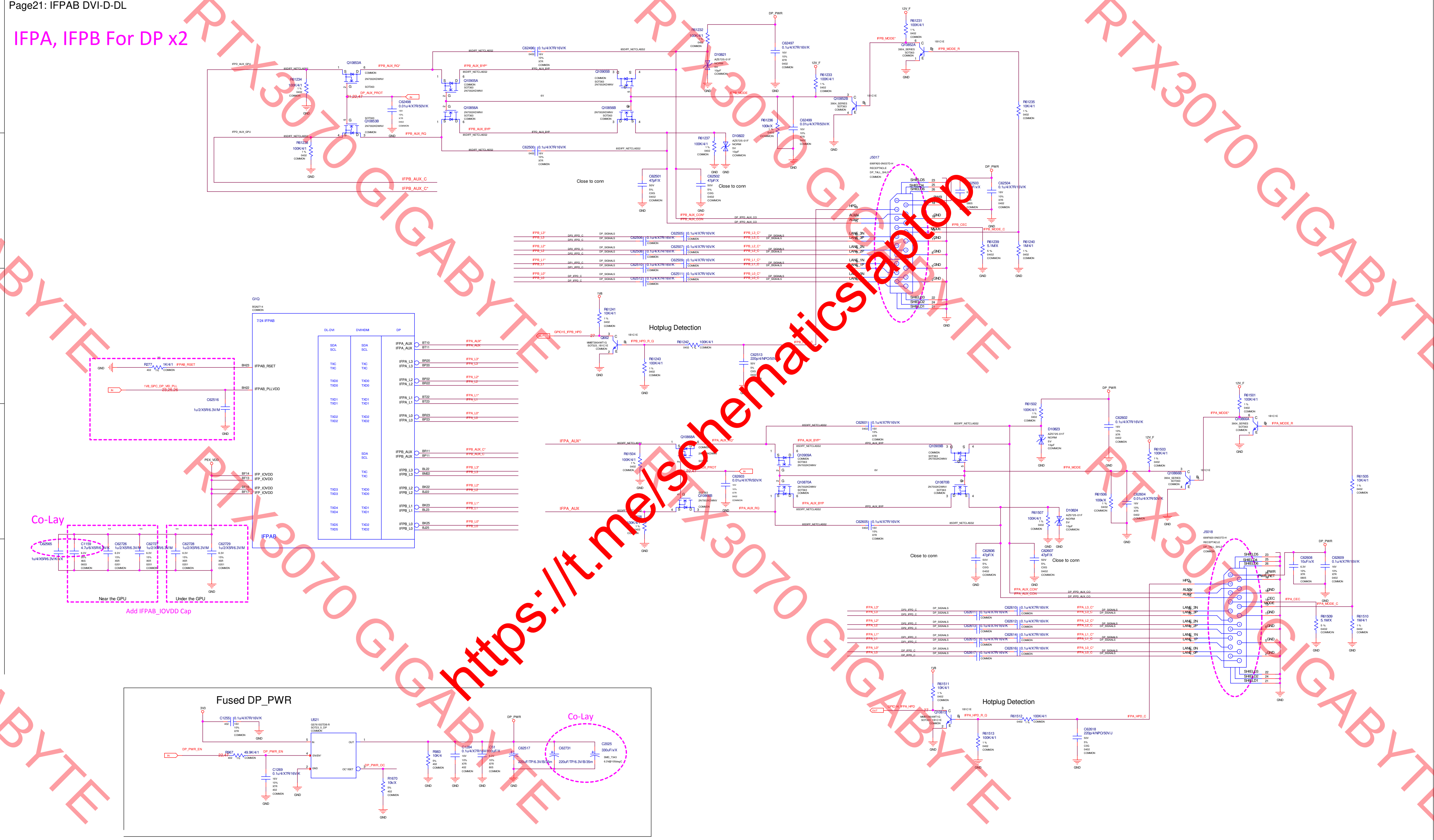

IFPA, IFPB For DP x2

A
B
C
D
E
F
G
H
1
2
3
4
5
IFPD_AUX_GPU
85DIFF_NETCLASS2
Q10853A
IFPB_AUX_RQ*
COMMON
2N7002KDWNV
SOT363
R61234
100K/4/1
1 %
0402
COMMON
GND
DP_AUX_PROT
21,22,47
IN
C62498
0.01u/4/X7R/50V/K
16V
10%
X7R
0402
SOT363
Q10853B
2N7002KDWNV
IFPB_AUX_RQ
R61238
100K/4/1
IFPB_AUX_C
IFPB_AUX_C*
IFPB_AUX_BYP*
Q10905A
Q10856A
IFPB_AUX_BYP
IFPD_AUX_BYP
6V
C62496
0.1u/4/X7R/16V/K
Q10905B
Q10856B
C62500
0.1u/4/X7R/16V/K
DP_PWR
R61232
100K/4/1
D10821
AZ5725-01F
NORM
5V
10pF
C62497
0.1u/4/X7R/16V/K
IFPB_MODE
12V_F
R61233
100K/4/1
R61231
100K/4/1
IFPB_MODE*
Q10852A
3904_SERIES
1B1C1E
IFPB_MODE_R
Q10852B
R61235
10K/4/1
R61236
100k/X
C62499
0.01u/4/X7R/50V/K
R61237
100K/4/1
D10822
AZ5725-01F
C62501
47pF/X
50V
5%
C0G
C62502
47pF/X
Close to conn
Close to conn
IFPB_AUX_CON*
IFPB_AUX_CON
DP_IFPD_AUX_CO
J5017
699FA20-0N037D-H
RECEPTACLE
DP_TALL_SHLD
SHIELD5
SHIELD4
SHIELD6
PWR
HPD
AUXN
AUXP
MODE
LANE_3N
LANE_3P
LANE_2N
LANE_2P
LANE_1N
LANE_1P
LANE_0N
LANE_0P
GND
SHIELD3
SHIELD2
SHIELD1
C62503
C62504
0.1u/4/X7R/16V/K
0805
IFPB_CEC
IFPB_MODE_C
R61239
5.1M/X
5 %
R61240
1M/4/1
IFPB_L3*
IFPB_L3
IFPB_L2*
IFPB_L2
IFPB_L1*
IFPB_L1
IFPB_L0*
IFPB_L0
DP3_IFPD_C
DP2_IFPD_C
DP1_IFPD_C
DP_IFPD_C
DP_SIGNALS
C62505
C62506
C62507
C62508
C62509
C62510
C62511
C62512
0.1u/4/X7R/16V/K
IFPB_L3_C*
IFPB_L3_C
IFPB_L2_C*
IFPB_L2_C
IFPB_L1_C*
IFPB_L1_C
IFPB_L0_C*
IFPB_L0_C
1V8
R61241
10K/4/1
GPIO15_IFPB_HPD
OUT
27
Q662
MMBT3904WT1G
SOT323_1B1C1E
Hotplug Detection
IFPB_HPD_R_Q
R61242
100K/4/1
R61243
100K/4/1
C62513
220p/4/NPO/50V
IFPB_HPD_C
G1Q
BGA2714
COMMON
7/24 IFPAB
DL-DVI
DVI/HDMI
DP
SDA
SCL
TXC
TXD0
TXD1
TXD2
TXD3
TXD4
TXD5
IFPA_AUX
IFPA_L3
IFPA_L2
IFPA_L1
IFPA_L0
IFPB_AUX
IFPB_L3
IFPB_L2
IFPB_L1
IFPB_L0
BT10
BT11
BR20
BP20
BP22
BR22
BT22
BT23
BR23
BP23
BR11
BP11
BL22
BM22
BK22
BJ22
BK23
BL23
BK25
BJ25
IFPA_AUX*
IFPA_L3*
IFPA_L2*
IFPA_L1*
IFPA_L0*
IFPB_AUX_C*
IFPB_AUX_C
IFPAB_RSET
IFPAB_PLLVDD
BH23
BH22
R277
1K/4/1
402
1%
1V8_GPC_DP_VID_PLL
23,25,26
C62516
1u/2/X5R/6.3V/M
PEX_VDD
BF14
BF13
BF16
BF17
IFP_IOVDD
IFPAB
Co-Lay
C62565
1u/4/X5R/6.3V/K/x/X
C1159
4.7u/6/X5R/6.3V/K
C62726
1u/2/X5R/6.3V/M
C62727
1u/2/X5R/6.3V/M
C62728
1u/2/X5R/6.3V/M
C62729
1u/2/X5R/6.3V/M
N/A
Near the GPU
Under the GPU
Add IFPAB_IOVDD Cap
Q10868A
IFPA_AUX_RQ*
R61504
100K/4/1
C62603
0.01u/4/X7R/50V/K
Q10868B
IFPA_AUX_RQ
R61508
100K/4/1
C62601
0.1u/4/X7R/16V/K
IFPA_AUX_BYP*
Q10909A
Q10909B
Q10870A
Q10870B
IFPA_AUX_BYP
C62605
0.1u/4/X7R/16V/K
R61502
100K/4/1
D10823
AZ5725-01F
C62602
0.1u/4/X7R/16V/K
IFPA_MODE
R61503
100K/4/1
R61501
100K/4/1
IFPA_MODE*
Q10866A
IFPA_MODE_R
Q10866B
R61505
10K/4/1
R61506
100k/X
C62604
0.01u/4/X7R/50V/K
R61507
100K/4/1
D10824
AZ5725-01F
C62606
47pF/X
C62607
47pF/X
Close to conn
IFPA_AUX_CON*
IFPA_AUX_CON
J5018
699FA20-0N037D-H
PWR_RET
CEC
C62608
10uF/x/X
6.3V
C62609
0.1u/4/X7R/16V/K
IFPA_CEC
IFPA_MODE_C
R61509
5.1M/X
R61510
1M/4/1
C62610
C62611
C62612
C62613
C62614
C62615
C62616
C62617
IFPA_L3_C*
IFPA_L3_C
IFPA_L2_C*
IFPA_L2_C
IFPA_L1_C*
IFPA_L1_C
IFPA_L0_C*
IFPA_L0_C
R61511
10K/4/1
GPIO14_IFPA_HPD
Q10872
Hotplug Detection
IFPA_HPD_R_Q
R61512
100K/4/1
R61513
100K/4/1
C62618
220p/4/NPO/50V/J
IFPA_HPD_C
Fused DP_PWR
3V3
C1255
0.1u/4/X7R/16V/K
U521
GS7615STDB-R
SOT23_5_DP
IN
OUT
EN/EN*
GND
OC*/ISET
DP_PWR_EN
22,47
R967
49.9K/4/1
C1269
0.1u/4/X7R/16V/K
DP_PWR_OC
R1670
10k/X
R983
10K/4
C1284
0.1u/4/X7R/16V/K
C51
10uF/X
C62517
220uF/TP/6.3V/B/35m
Co-Lay
C62731
220uF/TP/6.3V/B/35m
C2025
330uF/x/X
SMD_7343
6.3V@105degC

GIGABYTE

Title
Page21: IFPAB DVI-D-DL

Size	Document Number	Rev
D	GV-N3070AORUS M-8GD	1.0

Date: Thursday, August 06, 2020 Sheet 21 of 57

Page22: IFPF DP

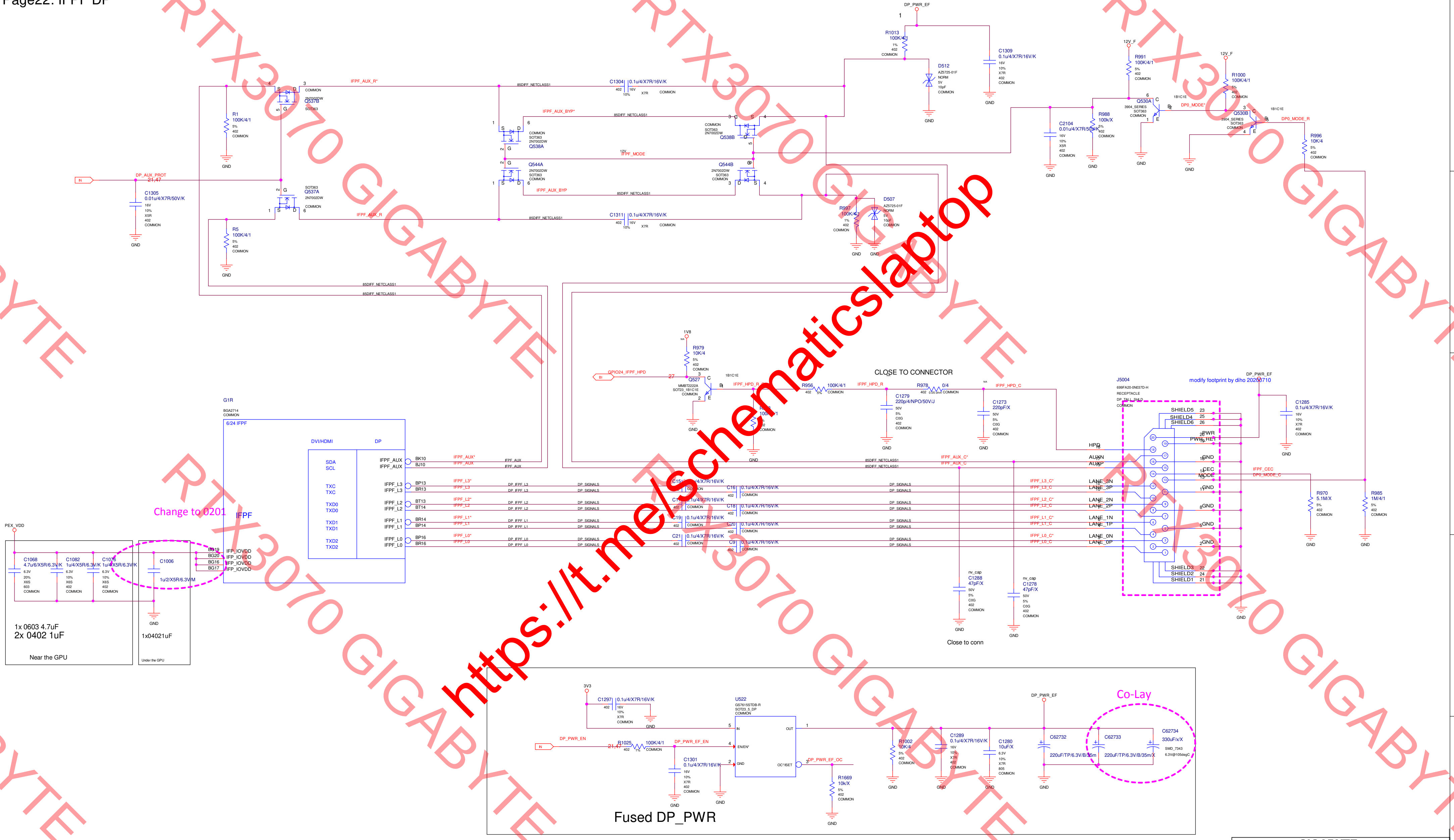

DP_PWR_EF
R1013 100K/4/1 1% 402 COMMON
D512 AZ5725-01F NORM 5V 10pF COMMON
C1309 0.1u/4/X7R/16V/K 16V 10% X7R 402 COMMON
GND
IFPF_AUX_R*
85DIFF_NETCLASS1
C1304 0.1u/4/X7R/16V/K 402 16V 10% X7R COMMON
Q537B 2N7002DW SOT363
R1 100K/4/1 5% 402 COMMON
IFPF_AUX_BYP*
Q538A SOT363 2N7002DW COMMON
Q538B SOT363 2N7002DW COMMON
IFPF_MODE
Q544A 2N7002DW SOT363 COMMON
Q544B 2N7002DW SOT363 COMMON
IFPF_AUX_BYP
IFPF_AUX_R
DP_AUX_PROT 21,47
IN
C1305 0.01u/4/X7R/50V/K 16V 10% X5R 402 COMMON
SOT363 Q537A 2N7002DW COMMON
R5 100K/4/1 5% 402 COMMON
C1311 0.1u/4/X7R/16V/K 402 16V 10% X7R COMMON
R997 100K/4/1 1% 402 COMMON
D507 AZ5725-01F NORM 5V 10pF COMMON
12V_F
R991 100K/4/1 5% 402 COMMON
Q530A 3904_SERIES SOT363 COMMON
DP0_MODE*
1B1C1E
R1000 100K/4/1 5% 402 COMMON
Q530B 3904_SERIES SOT363 COMMON
DP0_MODE_R
C2104 0.01u/4/X7R/50V/K 16V 10% X5R 402 COMMON
R988 100k/X 5% 402 COMMON
R996 10K/4 5% 402 COMMON
1V8
R979 10K/4 5% 402 COMMON
GPIO24_IFPF_HPD 27
Q527 MMBT2222A SOT23_1B1C1E COMMON
IFPF_HPD_R
R956 100K/4/1 402 COMMON
CLOSE TO CONNECTOR
R978 0/4 402 COMMON
IFPF_HPD_C
C1279 220p/4/NPO/50V/J 50V 5% C0G 402 COMMON
C1273 220pF/X 50V 5% C0G 402 COMMON
J5004 699FA20-0N037D-H RECEPTACLE DP_TALL_SHLD COMMON
modify footprint by diho 20200710
C1285 0.1u/4/X7R/16V/K 16V 10% X7R 402 COMMON
SHIELD5 23
SHIELD4 25
SHIELD6 26
PWR
PWR_RET
HPD
AUXN
AUXP
CEC
MODE
LANE_3N
LANE_3P
LANE_2N
LANE_2P
LANE_1N
LANE_1P
LANE_0N
LANE_0P
SHIELD3 22
SHIELD2 24
SHIELD1 21
IFPF_CEC
DP0_MODE_C
R970 5.1M/X 5% 402 COMMON
R985 1M/4/1 5% 402 COMMON
G1R BGA2714 COMMON
6/24 IFPF
DVI/HDMI
DP
SDA SCL TXC TXC TXD0 TXD0 TXD1 TXD1 TXD2 TXD2
IFPF_AUX IFPF_AUX
IFPF_L3 IFPF_L3 IFPF_L2 IFPF_L2 IFPF_L1 IFPF_L1 IFPF_L0 IFPF_L0
BK10 BJ10 BP13 BR13 BT13 BT14 BR14 BP14 BP16 BR16
IFPF_AUX* IFPF_AUX
IFPF_L3* IFPF_L3 IFPF_L2* IFPF_L2 IFPF_L1* IFPF_L1 IFPF_L0* IFPF_L0
DP_IFPF_L3 DP_IFPF_L2 DP_IFPF_L1 DP_IFPF_L0
DP_SIGNALS
C15 C16 C17 C18 C19 C20 C21 C9 0.1u/4/X7R/16V/K 402 COMMON
IFPF_AUX_C* IFPF_AUX_C
IFPF_L3_C* IFPF_L3_C IFPF_L2_C* IFPF_L2_C IFPF_L1_C* IFPF_L1_C IFPF_L0_C* IFPF_L0_C
nv_cap C1288 47pF/X 50V 5% C0G 402 COMMON
nv_cap C1278 47pF/X 50V 5% C0G 402 COMMON
Close to conn
Change to 0201
IFPF
PEX_VDD
C1068 4.7u/6/X5R/6.3V/K 6.3V 20% X6S 603 COMMON
C1082 1u/4/X5R/6.3V/K 6.3V 10% X6S 402 COMMON
C1076 1u/4/X5R/6.3V/K 6.3V 10% X6S 402 COMMON
C1006 1u/2/X5R/6.3V/M
BG19 BG20 BG16 BG17
IFP_IOVDD IFP_IOVDD IFP_IOVDD IFP_IOVDD
1x 0603 4.7uF
2x 0402 1uF
Near the GPU
1x04021uF
Under the GPU
3V3
C1297 0.1u/4/X7R/16V/K 402 16V 10% X7R COMMON
U522 GS7615STDB-R SOT23_5_DP COMMON
IN OUT EN/EN* GND OC*/ISET
DP_PWR_EN 21,47
R1025 100K/4/1 402 1% COMMON
DP_PWR_EF_EN
C1301 0.1u/4/X7R/16V/K 16V 10% X7R 402 COMMON
DP_PWR_EF_OC
R1669 10k/X 5% 402 COMMON
R1002 10K/4 5% 402 COMMON
C1289 0.1u/4/X7R/16V/K 16V 10% X7R 402 COMMON
C1280 10uF/X 6.3V 10% X7R 805 COMMON
C62732 220uF/TP/6.3V/B/35m
C62733 220uF/TP/6.3V/B/35m/X
C62734 330uF/x/X SMD_7343 6.3V@105degC
Co-Lay
Fused DP_PWR

ASSEMBLY <ASSEMBLY_DESCRIPTION>
PAGE DETAIL IO: IFPF DP

ALL NVIDIA DESIGN SPECIFICATIONS, REFERENCE SPECIFICATIONS, REFERENCE BOARDS, FILES, DRAWINGS, DIAGNOSTICS, LISTS AND OTHER DOCUMENTS OR INFORMATION (TOGETHER AND SEPARATELY, 'MATERIALS') ARE BEING PROVIDED 'AS IS'. THE MATERIALS MAY CONTAIN KNOWN AND UNKNOWN VIOLATIONS OR DEVIATIONS OF INDUSTRY STANDARDS AND SPECIFICATIONS. NVIDIA MAKES NO WARRANTIES, EXPRESSED, IMPLIED, STATUTORY OR OTHERWISE WITH RESPECT TO THE MATERIALS OR OTHERWISE, AND EXPRESSLY DISCLAIMS ALL IMPLIED WARRANTIES INCLUDING, WITHOUT LIMITATION, THE WARRANTIES OF DESIGN, OF NONINFRINGEMENT, MERCHANTABILITY OR FITNESS FOR A PARTICULAR PURPOSE, OR ARISING FROM A COURSE OF DEALING, TRADE USAGE, TRADE PRACTICE, OR INDUSTRY STANDARDS.

GIGABYTE

Title	Page22: IFPF DP	
Size Custom	Document Number GV-N3070AORUS M-8GD	Rev 1.0
Date: Thursday, August 06, 2020	Sheet 22 of 57	

Page23: IFPE DP

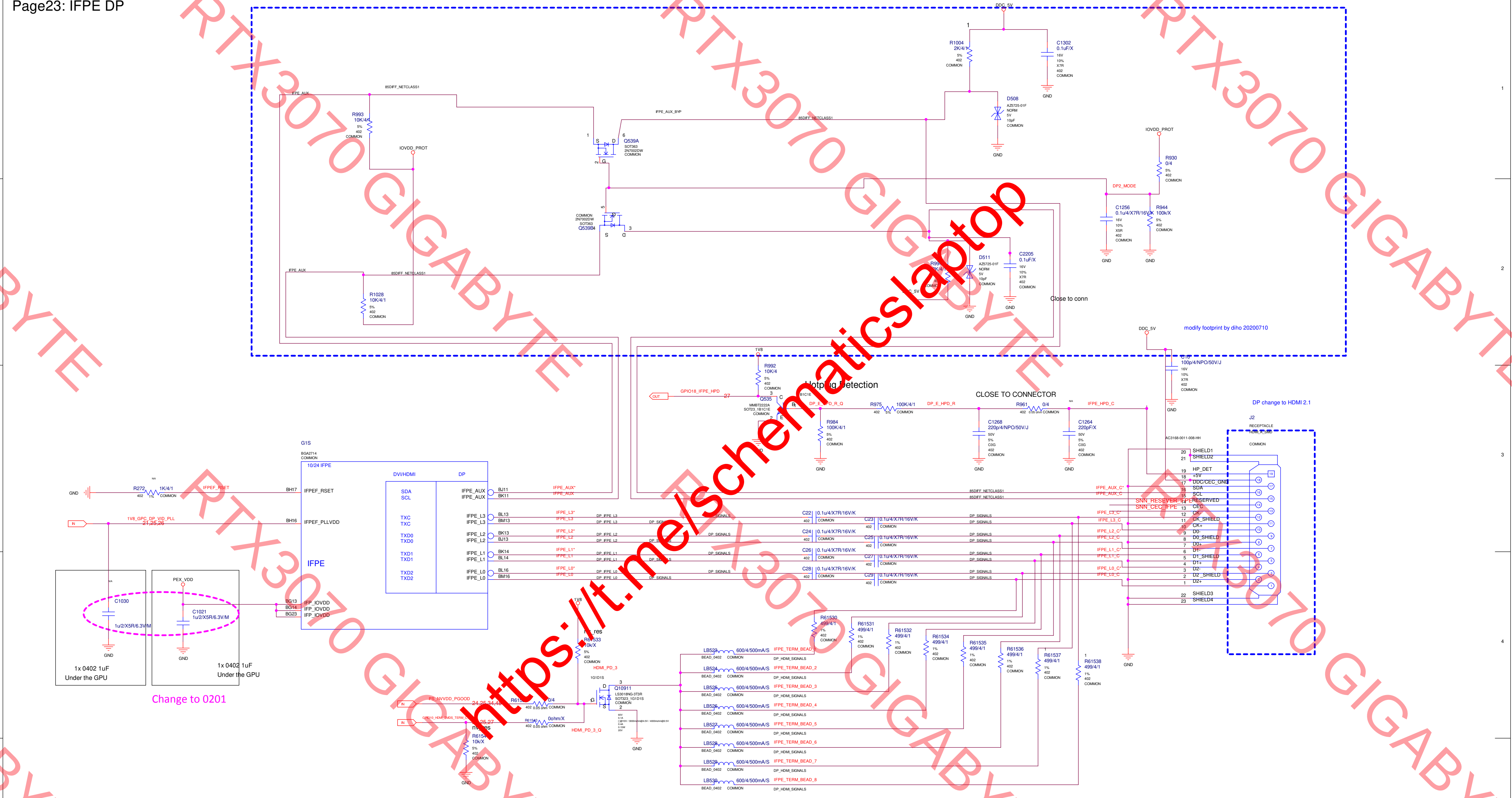

DDC_5V
R1004
2K/4/1
C1302
0.1uF/X
D508
AZ5725-01F
IFPE_AUX
85DIFF_NETCLASS1
IFPE_AUX_BYP
R993
10K/4/1
IOVDD_PROT
Q539A
SOT363
2N7002DW
Q539B
R930
0/4
DP2_MODE
C1256
0.1u/4/X7R/16V/K
R944
100k/X
C2205
0.1uF/X
D511
AZ5725-01F
R1028
10K/4/1
Close to conn
modify footprint by diho 20200710
C10
100p/4/NPO/50V/J
1V8
R992
10K/4
GPIO18_IFPE_HPD
OUT
Q535
MMBT2222A
Hotplug Detection
CLOSE TO CONNECTOR
R975
100K/4/1
DP_E_HPD_R
R961
0/4
IFPE_HPD_C
R984
100K/4/1
C1268
220p/4/NPO/50V/J
C1264
220pF/X
DP change to HDMI 2.1
J2
RECEPTACLE
AC3168-0011-008-HH
G1S
BGA2714
10/24 IFPE
DVI/HDMI
DP
IFPEF_RSET
IFPEF_PLLVDD
IFPE_AUX
SDA
SCL
TXC
TXD0
TXD1
TXD2
IFPE_L3
IFPE_L2
IFPE_L1
IFPE_L0
IFPE
IFP_IOVDD
R272
1K/4/1
GND
1V8_GPC_DP_VID_PLL
IN
C1030
1u/2/X5R/6.3V/M
PEX_VDD
C1021
1u/2/X5R/6.3V/M
1x 0402 1uF
Under the GPU
1x 0402 1uF
Under the GPU
Change to 0201
C22 C23 C24 C25 C26 C27 C28 C29
0.1u/4/X7R/16V/K
DP_SIGNALS
IFPE_AUX_C
IFPE_L3_C
IFPE_L2_C
IFPE_L1_C
IFPE_L0_C
SNN_RESERVED_IFPE
SNN_CEC_IFPE
SHIELD1
SHIELD2
HP_DET
+5V
DDC/CEC_GND
SDA
SCL
RESERVED
CEC
CK-
CK_SHIELD
CK+
D0-
D0_SHIELD
D0+
D1-
D1_SHIELD
D1+
D2-
D2_SHIELD
D2+
SHIELD3
SHIELD4
R61530 R61531 R61532 R61534 R61535 R61536 R61537 R61538
499/4/1
LB523 LB524 LB525 LB526 LB527 LB528 LB529 LB530
600/4/500mA/S
BEAD_0402
IFPE_TERM_BEAD_1
IFPE_TERM_BEAD_2
IFPE_TERM_BEAD_3
IFPE_TERM_BEAD_4
IFPE_TERM_BEAD_5
IFPE_TERM_BEAD_6
IFPE_TERM_BEAD_7
IFPE_TERM_BEAD_8
DP_HDMI_SIGNALS
R61533
10k/X
HDMI_PD_3
Q10911
LS3018NG-3T3R
SOT323_1G1D1S
PS_NVVDD_PGOOD
R6154
10k/X
HDMI_PD_3_Q
0ohm/X
COMMON

ASSEMBLY
PAGE DETAIL

<ASSEMBLY_DESCRIPTION>
IO: IFPE DP

ALL NVIDIA DESIGN SPECIFICATIONS, REFERENCE SPECIFICATIONS, REFERENCE BOARDS, FILES, DRAWINGS, DIAGNOSTICS, LISTS AND OTHER DOCUMENTS OR INFORMATION (TOGETHER AND SEPARATELY, 'MATERIALS') ARE BEING PROVIDED 'AS IS'. THE MATERIALS MAY CONTAIN KNOWN AND UNKNOWN VIOLATIONS OR DEVIATIONS OF INDUSTRY STANDARDS AND SPECIFICATIONS. NVIDIA MAKES NO WARRANTIES, EXPRESSED, IMPLIED, STATUTORY OR OTHERWISE WITH RESPECT TO THE MATERIALS OR OTHERWISE, AND EXPRESSLY DISCLAIMS ALL IMPLIED WARRANTIES INCLUDING, WITHOUT LIMITATION, THE WARRANTIES OF DESIGN, OF NONINFRINGEMENT, MERCHANTABILITY OR FITNESS FOR A PARTICULAR PURPOSE, OR ARISING FROM A COURSE OF DEALING, TRADE USAGE, TRADE PRACTICE, OR INDUSTRY STANDARDS.

GIGABYTE

Title	Page23: IFPE DP	
Size Custom	Document Number GV-N3070AORUS M-8GD	Rev 1.0
Date: Thursday, August 06, 2020	Sheet 23 of 57	

Page24: IFPD DP

1. DP AUX to DP connector: AUX AC coupled
2. DP AUX to DP-DVI dongle: AUX pass through

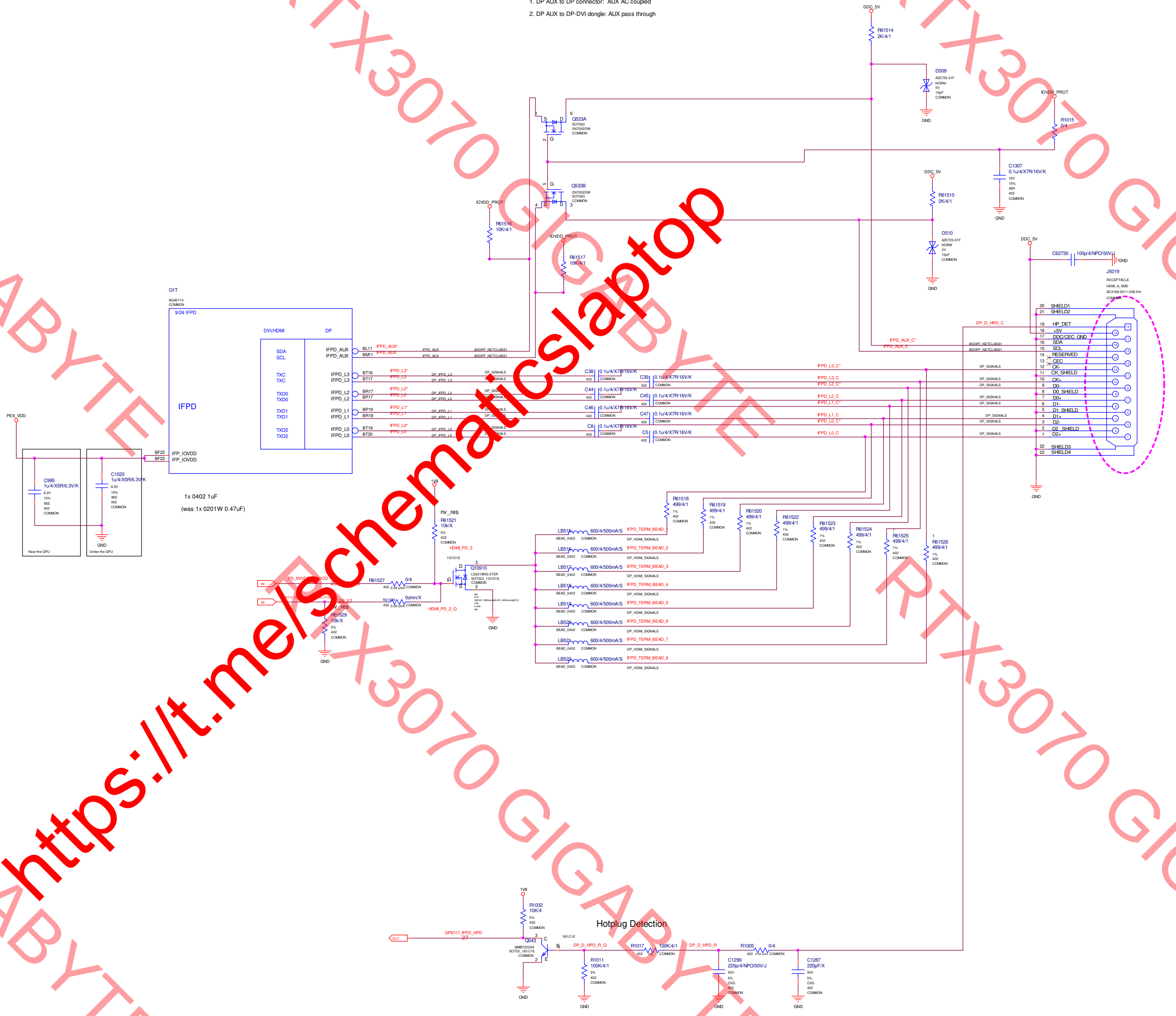

DDC_5V
R61514
2K/4/1
D509
AZ5725-01F
NORM
5V
10pF
COMMON
GND
IOVDD_PROT
R1015
0/4
Q533A
SOT363
2N7002DW
S
D
G
Q533B
C1307
0.1u/4/X7R/16V/K
16V
10%
X5R
402
DDC_5V
R61515
2K/4/1
D510
AZ5725-01F
IOVDD_PROT
R61516
10K/4/1
R61517
10K/4/1
C62730
100p/4/NPO/50V/J
J5019
RECEPTACLE
HDMI_A_SMD
AC3168-0011-008-HH
20 SHIELD1
21 SHIELD2
19 HP_DET
18 +5V
17 DDC/CEC_GND
16 SDA
15 SCL
14 RESERVED
13 CEC
12 CK-
11 CK_SHIELD
10 CK+
9 D0-
8 D0_SHIELD
7 D0+
6 D1-
5 D1_SHIELD
4 D1+
3 D2-
2 D2_SHIELD
1 D2+
22 SHIELD3
23 SHIELD4
DP_D_HPD_C
IFPD_AUX_C*
IFPD_AUX_C
85DIFF_NETCLASS1
DP_SIGNALS
G1T
BGA2714
COMMON
9/24 IFPD
IFPD
DVI/HDMI
DP
SDA
SCL
TXC
TXC
TXD0
TXD0
TXD1
TXD1
TXD2
TXD2
IFPD_AUX
IFPD_AUX
IFPD_L3
IFPD_L3
IFPD_L2
IFPD_L2
IFPD_L1
IFPD_L1
IFPD_L0
IFPD_L0
BL11
BM11
BT16
BT17
BR17
BP17
BP19
BR19
BT19
BT20
IFPD_AUX*
IFPD_AUX
IFPD_L3*
IFPD_L2*
IFPD_L1*
IFPD_L0*
DP_IFPD_L3
DP_IFPD_L2
DP_IFPD_L1
DP_IFPD_L0
C38 0.1u/4/X7R/16V/K
C39 0.1u/4/X7R/16V/K
C44 0.1u/4/X7R/16V/K
C45 0.1u/4/X7R/16V/K
C46 0.1u/4/X7R/16V/K
C47 0.1u/4/X7R/16V/K
C8 0.1u/4/X7R/16V/K
C5 0.1u/4/X7R/16V/K
IFPD_L3_C*
IFPD_L3_C
IFPD_L2_C*
IFPD_L2_C
IFPD_L1_C*
IFPD_L1_C
IFPD_L0_C*
IFPD_L0_C
PEX_VDD
BF22
BF23
IFP_IOVDD
IFP_IOVDD
C995
1u/4/X5R/6.3V/K
6.3V
10%
X6S
Near the GPU
C1025
1u/4/X5R/6.3V/K
Under the GPU
1x 0402 1uF
(was 1x 0201W 0.47uF)
1V8
nv_res
R61521
10k/X
5%
HDMI_PD_2
1G1D1S
Q10910
LS3018NG-3T3R
SOT323_1G1D1S
IN
PS_NVVDD_GOOD
R61527
0/4
0.05 ohm
IN
R61528
0ohm/X
HDMI_PD_2_Q
nv_res
R61529
10k/X
GND
R61518 499/4/1
R61519 499/4/1
R61520 499/4/1
R61522 499/4/1
R61523 499/4/1
R61524 499/4/1
R61525 499/4/1
R61526 499/4/1
1%
LB515 600/4/500mA/S
LB516 600/4/500mA/S
LB517 600/4/500mA/S
LB518 600/4/500mA/S
LB519 600/4/500mA/S
LB520 600/4/500mA/S
LB521 600/4/500mA/S
LB522 600/4/500mA/S
BEAD_0402
IFPD_TERM_BEAD_1
IFPD_TERM_BEAD_2
IFPD_TERM_BEAD_3
IFPD_TERM_BEAD_4
IFPD_TERM_BEAD_5
IFPD_TERM_BEAD_6
IFPD_TERM_BEAD_7
IFPD_TERM_BEAD_8
DP_HDMI_SIGNALS
Hotplug Detection
1V8
R1032
10K/4
OUT
GPIO17_IFPD_HPD
27
Q543
MMBT2222A
SOT23_1B1C1E
1B1C1E
C
B
E
DP_D_HPD_R_Q
R1011
100K/4/1
R1017
100K/4/1
DP_D_HPD_R
R1005
0/4
C1299
220p/4/NPO/50V/J
50V
5%
C0G
C1287
220pF/X

GIGABYTE		
Title	Page24: IFPD DP	
Size D	Document Number GV-N3070AORUS M-8GD	Rev 1.0
Date: Thursday, August 06, 2020	Sheet 24 of 57	

Page25: IFPC HDMI/DP

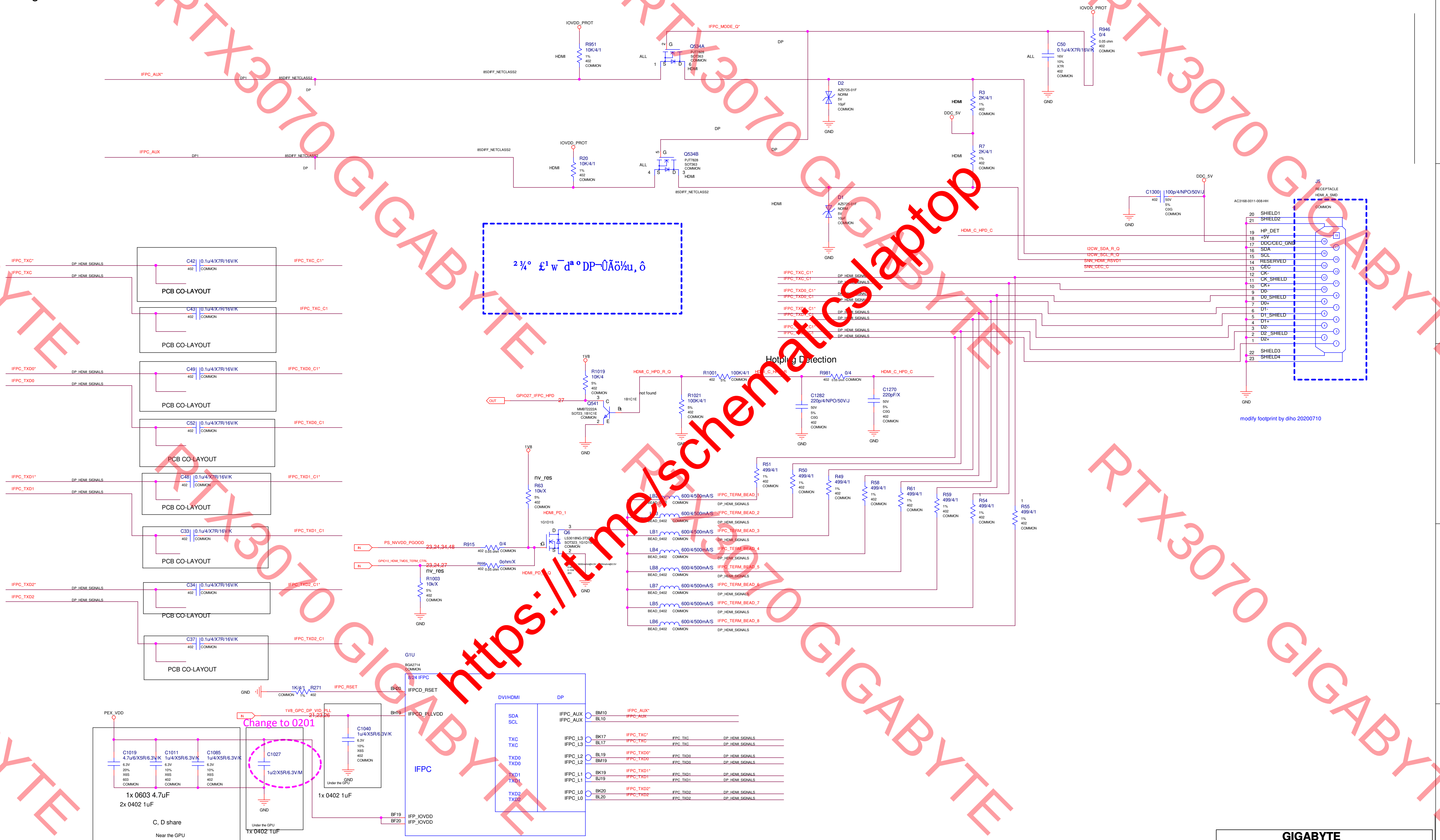
IFPC_AUX*
DP1
85DIFF_NETCLASS2
DP
IFPC_AUX
IOVDD_PROT
R951
10K/4/1
1%
402
COMMON
HDMI
ALL
IFPC_MODE_Q*
Q534A
PJT7828
SOT363
COMMON
G
S
D
R20
10K/4/1
Q534B
D2
AZ5725-01F
NORM
5V
10pF
GND
D1
R3
2K/4/1
R7
2K/4/1
DDC_5V
C50
0.1u/4/X7R/16V/K
16V
10%
X7R
R946
0/4
0.05 ohm
C1300
100p/4/NPO/50V/J
50V
5%
C0G
J5
RECEPTACLE
HDMI_A_SMD
AC3168-0011-008-HH
SHIELD1
SHIELD2
HP_DET
+5V
DDC/CEC_GND
SDA
SCL
RESERVED
CEC
CK-
CK_SHIELD
CK+
D0-
D0_SHIELD
D0+
D1-
D1_SHIELD
D1+
D2-
D2_SHIELD
D2+
SHIELD3
SHIELD4
HDMI_C_HPD_C
I2CW_SDA_R_Q
I2CW_SCL_R_Q
SNN_HDMI_RSVD1
SNN_CEC_C
modify footprint by diho 20200710
² ¾° £¹ w ¯ dª º DP¬ÛÃö½u, ô
IFPC_TXC*
IFPC_TXC
IFPC_TXD0*
IFPC_TXD0
IFPC_TXD1*
IFPC_TXD1
IFPC_TXD2*
IFPC_TXD2
DP_HDMI_SIGNALS
C42
C43
C49
C52
C48
C33
C34
C37
0.1u/4/X7R/16V/K
PCB CO-LAYOUT
IFPC_TXC_C1*
IFPC_TXC_C1
IFPC_TXD0_C1*
IFPC_TXD0_C1
IFPC_TXD1_C1*
IFPC_TXD1_C1
IFPC_TXD2_C1*
IFPC_TXD2_C1
Hotplug Detection
1V8
R1019
10K/4
GPIO27_IFPC_HPD
OUT
27
Q541
MMBT2222A
SOT23_1B1C1E
1B1C1E
not found
HDMI_C_HPD_R_Q
R1001
100K/4/1
R1021
100K/4/1
C1282
220p/4/NPO/50V/J
R981
0/4
C1270
220pF/X
R51
R50
R49
R58
R61
R59
R54
R55
499/4/1
nv_res
R63
10k/X
HDMI_PD_1
1G1D1S
Q6
LS3018NG-3T3R
SOT323_1G1D1S
PS_NVVDD_PGOOD
23,24,34,48
R915
GPIO10_HDMI_TMDS_TERM_CTRL
23,24,27
R998
0ohm/X
R1003
10k/X
HDMI_PD_Q
IN
LB2
LB3
LB1
LB4
LB8
LB7
LB5
LB6
600/4/500mA/S
BEAD_0402
IFPC_TERM_BEAD_1
IFPC_TERM_BEAD_2
IFPC_TERM_BEAD_3
IFPC_TERM_BEAD_4
IFPC_TERM_BEAD_5
IFPC_TERM_BEAD_6
IFPC_TERM_BEAD_7
IFPC_TERM_BEAD_8
G1U
BGA2714
COMMON
8/24 IFPC
IFPCD_RSET
IFPCD_PLLVDD
IFP_IOVDD
IFPC
DVI/HDMI
DP
SDA
SCL
TXC
TXD0
TXD1
TXD2
IFPC_AUX
IFPC_L3
IFPC_L2
IFPC_L1
IFPC_L0
BH20
BH19
BF19
BF20
BM10
BL10
BK17
BL17
BL19
BM19
BK19
BJ19
BK20
BL20
R271
1K/4/1
IFPC_RSET
1V8_GPC_DP_VID_PLL
21,23,26
Change to 0201
PEX_VDD
C1019
4.7u/6/X5R/6.3V/K
C1011
1u/4/X5R/6.3V/K
C1085
1u/4/X5R/6.3V/K
C1027
1u/2/X5R/6.3V/M
C1040
1u/4/X5R/6.3V/K
1x 0603 4.7uF
2x 0402 1uF
C, D share
Near the GPU
Under the GPU
1x 0402 1uF

ASSEMBLY
PAGE DETAIL

<ASSEMBLY_DESCRIPTION>
IO: IFPC HDMI/DP

ALL NVIDIA DESIGN SPECIFICATIONS, REFERENCE SPECIFICATIONS, REFERENCE BOARDS, FILES, DRAWINGS, DIAGNOSTICS, LISTS AND OTHER DOCUMENTS OR INFORMATION (TOGETHER AND SEPARATELY, 'MATERIALS') ARE BEING PROVIDED 'AS IS'. THE MATERIALS MAY CONTAIN KNOWN AND UNKNOWN VIOLATIONS OR DEVIATIONS OF INDUSTRY STANDARDS AND SPECIFICATIONS. NVIDIA MAKES NO WARRANTIES, EXPRESSED, IMPLIED, STATUTORY OR OTHERWISE WITH RESPECT TO THE MATERIALS OR OTHERWISE, AND EXPRESSLY DISCLAIMS ALL IMPLIED WARRANTIES INCLUDING, WITHOUT LIMITATION, THE WARRANTIES OF DESIGN, OF NONINFRINGEMENT, MERCHANTABILITY OR FITNESS FOR A PARTICULAR PURPOSE, OR ARISING FROM A COURSE OF DEALING, TRADE USAGE, TRADE PRACTICE, OR INDUSTRY STANDARDS.

GIGABYTE

Title
Page25: IFPC HDMI/DP
Size Custom
Document Number GV-N3070AORUS M-8GD
Rev 1.0
Date: Thursday, August 06, 2020
Sheet 25 of 57

Page26: MISC2: ROM, XTAL, Straps

STRAP2	STRAP1	STRAP0	RAMCFG[4:0]	
L	L	L	00000	RAMCFG SAMSUNG 8Gb 7GHz
L	L	H	00001	RAMCFG MICRON 8Gb 7GHz
L	H	L	00010	RAMCFG HYNIX 8Gb 7GHz
H	H	L	00110	RAMCFG SAMSUNG 16Gb 8GHz
		TBD		

H=High :Tied to 1.8V
M=Middle:Tied to 0.9V
L=Low :Tied to 0V

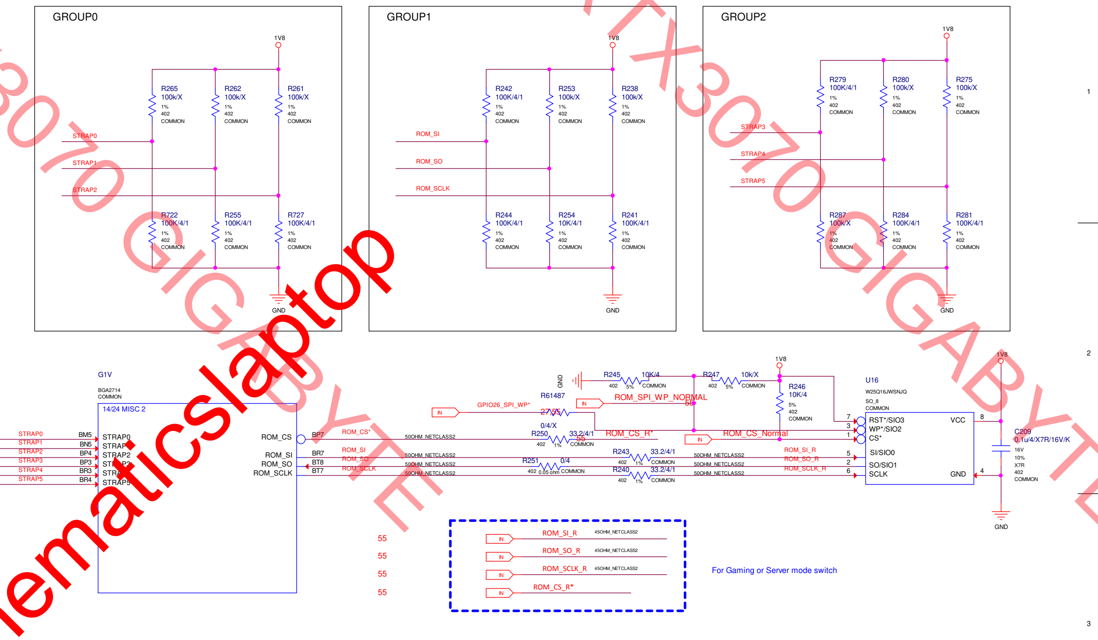
GROUP0
1V8
R265 100k/X 1% 402 COMMON
R262 100k/X 1% 402 COMMON
R261 100k/X 1% 402 COMMON
STRAP0
STRAP1
STRAP2
R722 100K/4/1 1% 402 COMMON
R255 100K/4/1 1% 402 COMMON
R727 100K/4/1 1% 402 COMMON
GND
GROUP1
1V8
R242 100K/4/1 1% 402 COMMON
R253 100k/X 1% 402 COMMON
R238 100k/X 1% 402 COMMON
ROM_SI
ROM_SO
ROM_SCLK
R244 100K/4/1 1% 402 COMMON
R254 10K/4/1 1% 402 COMMON
R241 100K/4/1 1% 402 COMMON
GND
GROUP2
1V8
R279 100K/4/1 1% 402 COMMON
R280 100k/X 1% 402 COMMON
R275 100k/X 1% 402 COMMON
STRAP3
STRAP4
STRAP5
R287 100k/X 1% 402 COMMON
R284 100K/4/1 1% 402 COMMON
R281 100K/4/1 1% 402 COMMON
GND
G1V
BGA2714
COMMON
14/24 MISC 2
STRAP0 BM5
STRAP1 BN5
STRAP2 BP4
STRAP3 BP3
STRAP4 BR3
STRAP5 BR4
ROM_CS BP7
ROM_SI BR7
ROM_SO BT8
ROM_SCLK BT7
ROM_CS*
50OHM_NETCLASS2
GND
R245 10K/4 402 5% COMMON
R247 10k/X 402 5% COMMON
1V8
R246 10K/4 5% 402 COMMON
R61487
GPIO26_SPI_WP*
27/55
ROM_SPI_WP_NORMAL
55
0/4/X
R250 33.2/4/1 402 1% COMMON
55
ROM_CS_R*
ROM_CS_Normal
R251 0/4 402 0.05 ohm COMMON
R243 33.2/4/1 402 1% COMMON
R240 33.2/4/1 402 1% COMMON
ROM_SI_R
ROM_SO_R
ROM_SCLK_R
IN
U16
W25Q16JWSNJQ
SO_8
COMMON
7 RST*/SIO3
3 WP*/SIO2
1 CS*
5 SI/SIO0
2 SO/SIO1
6 SCLK
8 VCC
4 GND
1V8
C209 0.1u/4/X7R/16V/K 16V 10% X7R 402 COMMON
GND
55
55
55
55
ROM_SI_R 45OHM_NETCLASS2
ROM_SO_R 45OHM_NETCLASS2
ROM_SCLK_R 45OHM_NETCLASS2
ROM_CS_R*

For Gaming or Server mode switch

ROM_SO	ROM_SI	ROM_SCLK	SMARTFAN[2:0],FS_OVERT	1:ENABLE 0:DISABLE	
H	H	H	0111	FS_OVERT ENABLE	DEFAULT
H	H	M	0000	FS_OVERT DISABLE	

STRAP5	STRAP4	STRAP3	SMB_ALT_ADDR	DEVID_SEL	PCIE_CFG	VGA_DEVICE
M	H	H	1	1	1	1
M	H	L	1	1	1	0
M	L	H	1	1	0	1
M	L	L	1	1	0	0
L	H	M	1	0	1	1
L	M	H	1	0	1	0
L	M	L	1	0	0	[illegible]
L	L	M	1	0	0	0
H	H	H	0	1	1	1
H	H	L	0	1	1	0
H	L	H	0	1	0	1
H	L	L	0	1	0	0
L	H	H	0	0	1	1
L	H	L	0	0	1	0
L	L	H	0	0	0	1 DEFAULT
L	L	L	0	0	0	0

H=High :Tied to 1.8V
M=Middle:Tied to 0.9V
L=Low :Tied to 0V

1:SMB_ALT_ADDR ENABLE
0:SMB_ALT_ADDR DISABLE

1:DEVID_SEL REBRAND
0:DEVID_SEL ORIGNAL

1:PCIE_CFG LOW POWER
0:PCIE_CFG HIGH POWER

1:VGA_DEVICE ENABLE
0:VGA_DEVICE DISABLE

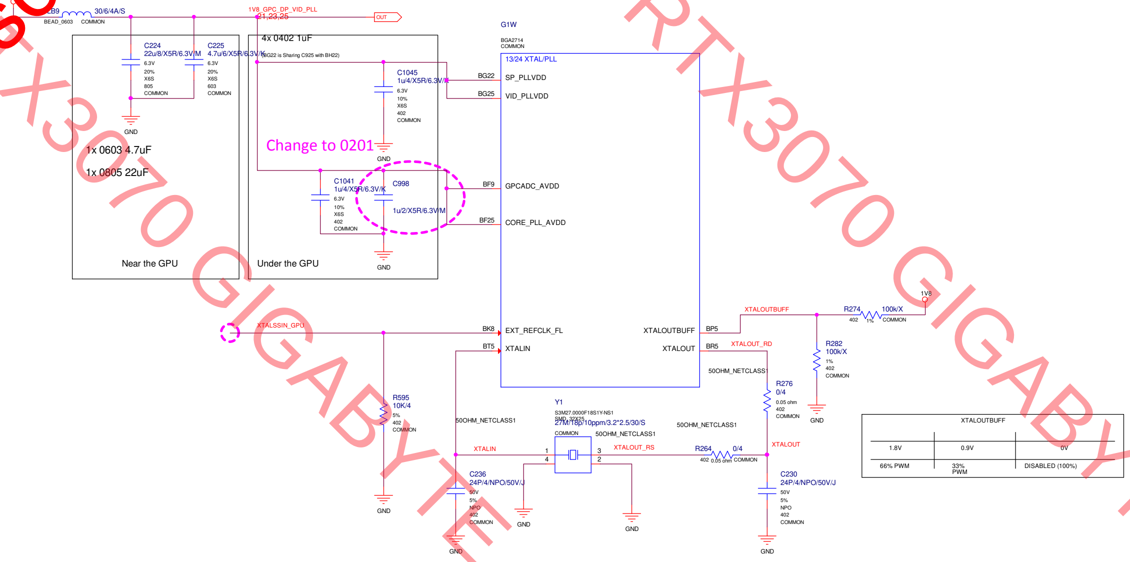
1V8
LB9 30/6/4A/S
BEAD_0603 COMMON
1V8_GPC_DP_VID_PLL
21,23,25
OUT
C224 22u/8/X5R/6.3V/M 6.3V 20% X6S 805 COMMON
C225 4.7u/6/X5R/6.3V/K 6.3V 20% X6S 603 COMMON
GND
1x 0603 4.7uF
1x 0805 22uF
Near the GPU
4x 0402 1uF
(BG22 is Sharing C925 with BH22)
C1045 1u/4/X5R/6.3V/K 6.3V 10% X6S 402 COMMON
Change to 0201
GND
C1041 1u/4/X5R/6.3V/K 6.3V 10% X6S 402 COMMON
C998 1u/2/X5R/6.3V/M
GND
Under the GPU
G1W
BGA2714
COMMON
13/24 XTAL/PLL
BG22 SP_PLLVDD
BG25 VID_PLLVDD
BF9 GPCADC_AVDD
BF25 CORE_PLL_AVDD
BK8 EXT_REFCLK_FL
BT5 XTALIN
XTALOUTBUFF BP5
XTALOUT BR5
XTALSSIN_GPU
R595 10K/4 5% 402 COMMON
GND
50OHM_NETCLASS1
XTALIN
Y1
S3M27.0000F18S1Y-NS1
SMD_32X25
27M/18p/10ppm/3.2*2.5/30/S
COMMON
50OHM_NETCLASS1
XTALOUT_RS
C236 24P/4/NPO/50V/J 50V 5% NPO 402 COMMON
GND
XTALOUTBUFF
R274 100k/X 402 1% COMMON
1V8
R282 100k/X 1% 402 COMMON
GND
XTALOUT_RD
50OHM_NETCLASS1
R276 0/4 0.05 ohm 402 COMMON
R264 0/4 402 0.05 ohm COMMON
XTALOUT
C230 24P/4/NPO/50V/J 50V 5% NPO 402 COMMON
GND

XTALOUTBUFF		
1.8V	0.9V	0V
66% PWM	33% PWM	DISABLED (100%)

ASSEMBLY <ASSEMBLY_DESCRIPTION>
PAGE DETAIL MISC1: ROM, XTAL,STRAPS

ALL NVIDIA DESIGN SPECIFICATIONS, REFERENCE SPECIFICATIONS, REFERENCE BOARDS, FILES, DRAWINGS, DIAGNOSTICS, LISTS AND OTHER DOCUMENTS OR INFORMATION (TOGETHER AND SEPARATELY, 'MATERIALS') ARE BEING PROVIDED 'AS IS'. THE MATERIALS MAY CONTAIN KNOWN AND UNKNOWN VIOLATIONS OR DEVIATIONS OF INDUSTRY STANDARDS AND SPECIFICATIONS. NVIDIA MAKES NO WARRANTIES, EXPRESSED, IMPLIED, STATUTORY OR OTHERWISE WITH RESPECT TO THE MATERIALS OR OTHERWISE, AND EXPRESSLY DISCLAIMS ALL IMPLIED WARRANTIES INCLUDING, WITHOUT LIMITATION, THE WARRANTIES OF DESIGN, OF NONINFRINGEMENT, MERCHANTABILITY OR FITNESS FOR A PARTICULAR PURPOSE, OR ARISING FROM A COURSE OF DEALING, TRADE USAGE, TRADE PRACTICE, OR INDUSTRY STANDARDS.

GIGABYTE
Title Page26: MISC2: ROM, XTAL, Straps
Size Custom
Document Number GV-N3070AORUS M-8GD
Rev 1.0
Date: Tuesday, September 08, 2020

Page27: MISC1: JTAG, GPIO, ADC, I2C, OVERT

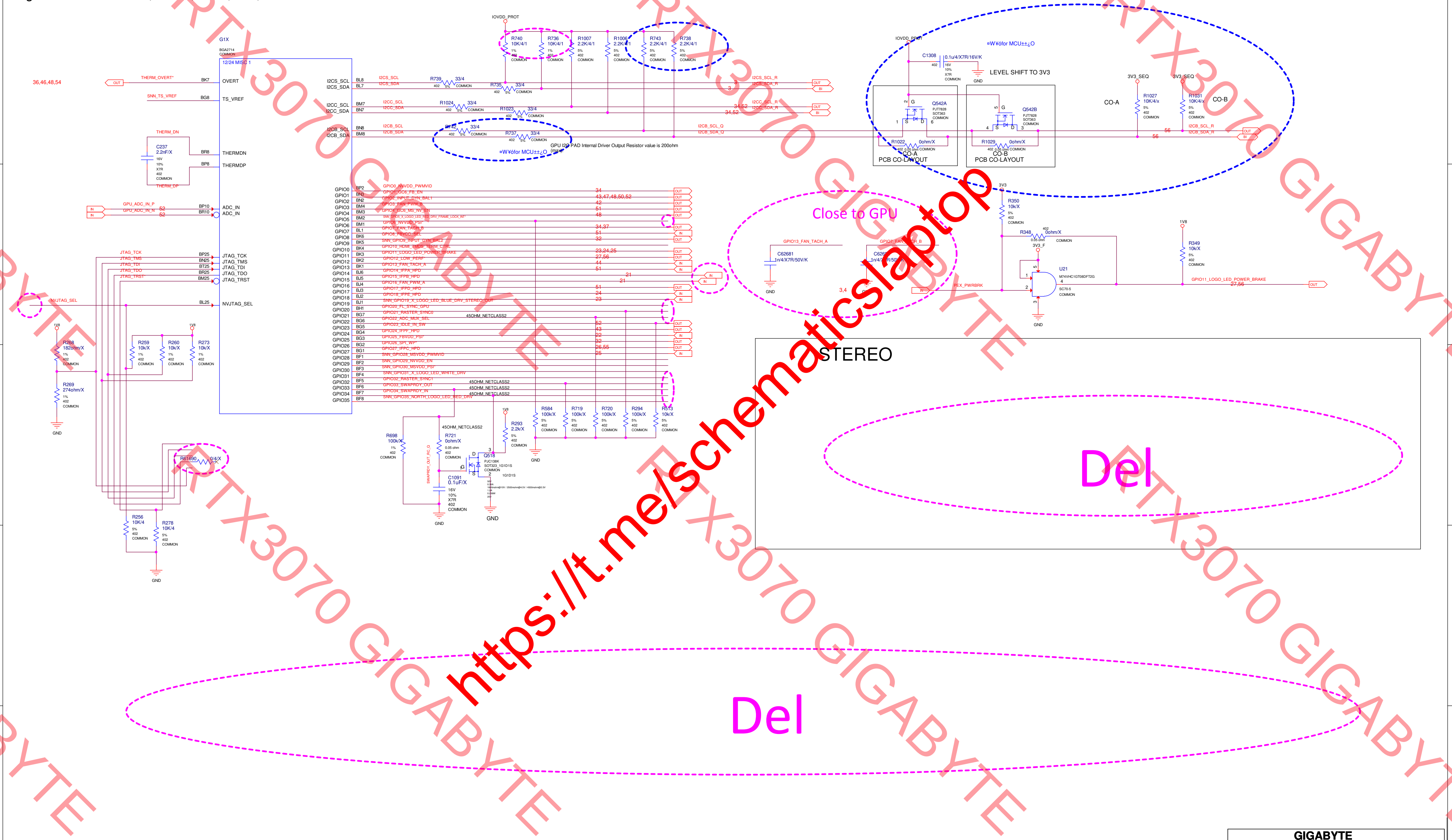
G1X
BGA2714
COMMON
12/24 MISC 1
IOVDD_PROT
R740 10K/4/1
R736 10K/4/1
R1007 2.2K/4/1
R1006 2.2K/4/1
R743 2.2K/4/1
R738 2.2K/4/1
36,46,48,54
THERM_OVERT*
BK7 OVERT
SNN_TS_VREF
BG8 TS_VREF
I2CS_SCL BL8
I2CS_SDA BL7
R739 33/4
R735 33/4
I2CC_SCL BM7
I2CC_SDA BN7
R1024 33/4
R1023 33/4
I2CB_SCL BN8
I2CB_SDA BM8
R742 33/4
R737 33/4
I2CS_SCL_R
I2CS_SDA_R
I2CC_SCL_R
I2CC_SDA_R
34,52
34,52
I2CB_SCL_Q
I2CB_SDA_Q
GPU I2C PAD Internal Driver Output Resistor value is 200ohm (max).
¤W¥ófor MCU±±¿O
THERM_DN
C237 2.2nF/X
BR8 THERMDN
BP8 THERMDP
THERM_DP
GPU_ADC_IN_P
GPU_ADC_IN_N
52
52
BP10 ADC_IN
BR10 ADC_IN
JTAG_TCK BP25
JTAG_TMS BN25
JTAG_TDI BT25
JTAG_TDO BR25
JTAG_TRST* BM25
NVJTAG_SEL BL25
R268 182ohm/X
R269 274ohm/X
R259 10k/X
R260 10k/X
R273 10k/X
R61690 0/4/X
R256 10K/4
R278 10K/4
GND
GPIO0 BP2 GPIO0_NVVDD_PWMVID 34
GPIO1 BN3 GPIO1_GC6_FB_EN 43,47,48,50,52
GPIO2 BN2 GPIO2_INPUT_DYN_BAL1 42
GPIO3 BM4 GPIO3_FAN_PWM_B 51
GPIO4 BM3 GPIO4_GC6_MS_NV_EN 48
GPIO5 BM2 SNN_GPIO5_X_LOGO_LED_RED_DRV_FRAME_LOCK_INT*
GPIO6 BM1 GPIO6_NVVDD_PSI* 34,37
GPIO7 BL1 GPIO7_FAN_TACH_B 51
GPIO8 BK6 GPIO8_FBVDD_SEL 32
GPIO9 BK5 SNN_GPIO9_INPUT_DYN_BAL2
GPIO10 BK4 GPIO10_HDMI_TMDS_TERM_CTRL 23,24,25
GPIO11 BK3 GPIO11_LOGO_LED_POWER_BRAKE 27,56
GPIO12 BK2 GPIO12_LOW_PERF* 44
GPIO13 BK1 GPIO13_FAN_TACH_A 51
GPIO14 BJ6 GPIO14_IFPA_HPD 21
GPIO15 BJ5 GPIO15_IFPB_HPD 21
GPIO16 BJ4 GPIO16_FAN_PWM_A 51
GPIO17 BJ3 GPIO17_IFPD_HPD 24
GPIO18 BJ2 GPIO18_IFPE_HPD 23
GPIO19 BJ1 SNN_GPIO19_X_LOGO_LED_BLUE_DRV_STEREO_OUT
GPIO20 BH1 GPIO20_FL_SYNC_GPU
GPIO21 BG7 GPIO21_RASTER_SYNC0
GPIO22 BG6 GPIO22_ADC_MUX_SEL 52
GPIO23 BG5 GPIO23_IDLE_IN_SW 43
GPIO24 BG4 GPIO24_IFPF_HPD 22
GPIO25 BG3 GPIO25_FBVDD_PSI* 32
GPIO26 BG2 GPIO26_SPI_WP* 26,55
GPIO27 BG1 GPIO27_IFPC_HPD 25
GPIO28 BF1 SNN_GPIO28_MSVDD_PWMVID
GPIO29 BF2 SNN_GPIO29_NVVDD_EN
GPIO30 BF3 SNN_GPIO30_MSVDD_PSI*
GPIO31 BF4 SNN_GPIO31_X_LOGO_LED_WHITE_DRV
GPIO32 BF5 GPIO32_RASTER_SYNC1
GPIO33 BF6 GPIO33_SWAPRDY_OUT
GPIO34 BF7 GPIO34_SWAPRDY_IN
GPIO35 BF8 SNN_GPIO35_NORTH_LOGO_LED_RED_DRV
45OHM_NETCLASS2
R584 100k/X
R719 100k/X
R720 100k/X
R294 100k/X
R513 10k/X
R293 2.2k/X
R698 100k/X
R721 0ohm/X
SWAPRDY_OUT_RC_Q
C1091 0.1uF/X
Q518 PJC138K SOT323_1G1D1S
IN
OUT
BI
IOVDD_PROT
C1308 0.1u/4/X7R/16V/K
LEVEL SHIFT TO 3V3
¤W¥ófor MCU±±¿O
Q542A PJT7828 SOT363
Q542B PJT7828 SOT363
R1022 0ohm/X
R1029 0ohm/X
CO-A
CO-B
PCB CO-LAYOUT
PCB CO-LAYOUT
3V3_SEQ
R1027 10K/4/x
R1031 10K/4/x
I2CB_SCL_R
I2CB_SDA_R
56
56
Close to GPU
GPIO13_FAN_TACH_A
GPIO7_FAN_TACH_B
C62681 1n/4/X7R/50V/K
C62682 1n/4/X7R/50V/K
3,4
PEX_PWRBRK
3V3
R350 10k/X
R348 0ohm/X
3V3_F
U21 M74VHC1G08DFT2G SC70-5
1V8
R349 10k/X
GPIO11_LOGO_LED_POWER_BRAKE
27,56
STEREO
Del
Del

ASSEMBLY <ASSEMBLY_DESCRIPTION>
PAGE DETAIL MISC2: JTAG,GPIO,ADC,I2C,FL,STEERO

ALL NVIDIA DESIGN SPECIFICATIONS, REFERENCE SPECIFICATIONS, REFERENCE BOARDS, FILES, DRAWINGS, DIAGNOSTICS, LISTS AND OTHER DOCUMENTS OR INFORMATION (TOGETHER AND SEPARATELY, 'MATERIALS') ARE BEING PROVIDED 'AS IS'. THE MATERIALS MAY CONTAIN KNOWN AND UNKNOWN VIOLATIONS OR DEVIATIONS OF INDUSTRY STANDARDS AND SPECIFICATIONS. NVIDIA MAKES NO WARRANTIES, EXPRESSED, IMPLIED, STATUTORY OR OTHERWISE WITH RESPECT TO THE MATERIALS OR OTHERWISE, AND EXPRESSLY DISCLAIMS ALL IMPLIED WARRANTIES INCLUDING, WITHOUT LIMITATION, THE WARRANTIES OF DESIGN, OF NONINFRINGEMENT, MERCHANTABILITY OR FITNESS FOR A PARTICULAR PURPOSE, OR ARISING FROM A COURSE OF DEALING, TRADE USAGE, TRADE PRACTICE, OR INDUSTRY STANDARDS.

GIGABYTE
Title
Page27: MISC1: JTAG, GPIO, ADC, I2C, OVERT
Size Custom
Document Number GV-N3070AORUS M-8GD
Rev 1.0
Date: Friday, August 28, 2020
Sheet 27 of 57

Page28: RGB

Del NV LED

WHITE DRIVE

LOGO LED WHITE

LOGO LED RED

GREEN DRIVE

BLUE DRIVE

RED DRIVE

ASSEMBLY	<ASSEMBLY_DESCRIPTION>
PAGE DETAIL	MISC3: RGB

ALL NVIDIA DESIGN SPECIFICATIONS, REFERENCE SPECIFICATIONS, REFERENCE BOARDS, FILES, DRAWINGS, DIAGNOSTICS, LISTS AND OTHER DOCUMENTS OR INFORMATION (TOGETHER AND SEPARATELY, 'MATERIALS') ARE BEING PROVIDED 'AS IS'. THE MATERIALS MAY CONTAIN KNOWN AND UNKNOWN VIOLATIONS OR DEVIATIONS OF INDUSTRY STANDARDS AND SPECIFICATIONS. NVIDIA MAKES NO WARRANTIES, EXPRESSED, IMPLIED, STATUTORY OR OTHERWISE WITH RESPECT TO THE MATERIALS OR OTHERWISE, AND EXPRESSLY DISCLAIMS ALL IMPLIED WARRANTIES INCLUDING, WITHOUT LIMITATION, THE WARRANTIES OF DESIGN, OF NONINFRINGEMENT, MERCHANTABILITY OR FITNESS FOR A PARTICULAR PURPOSE, OR ARISING FROM A COURSE OF DEALING, TRADE USAGE, TRADE PRACTICE, OR INDUSTRY STANDARDS.

GIGABYTE

Title
Page28: RGB

Size	Document Number	Rev
Custom	GV-N3070AORUS M-8GD	1.0

Date: Tuesday, July 21, 2020
Sheet 28 of 57

Page29: PS: 1V8

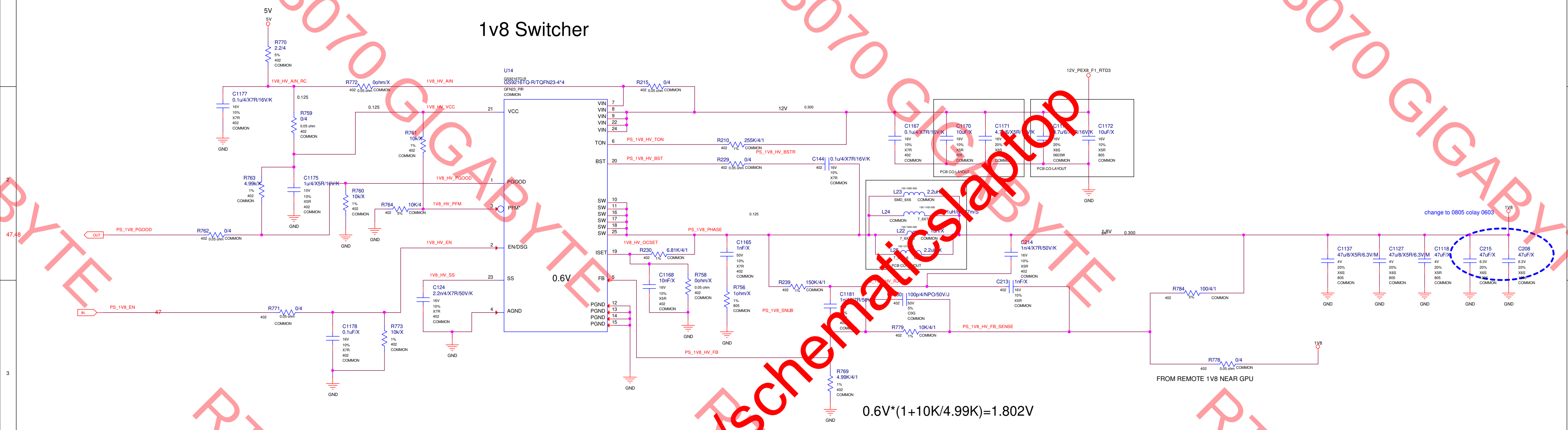
1v8 Switcher

0.6V*(1+10K/4.99K)=1.802V

FROM REMOTE 1V8 NEAR GPU

change to 0805 colay 0603

5V
R770 2.2/4 5% 402 COMMON
1V8_HV_AIN_RC
C1177 0.1u/4/X7R/16V/K 16V 10% X7R 402 COMMON
GND
0.125
R759 0/4 0.05 ohm 402 COMMON
R763 4.99k/X 1% 402 COMMON
C1175 1u/4/X5R/16V/K 10V 10% X5R 402 COMMON
R760 10k/X 1% 402 COMMON
R761 10k/X 1% 402 COMMON
R764 10K/4 402 5% COMMON
R762 0/4 402 0.05 ohm COMMON
PS_1V8_PGOOD
OUT
47,48
PS_1V8_EN
IN
47
R771 0/4 402 0.05 ohm COMMON
C1178 0.1uF/X 16V 10% X7R 402 COMMON
R773 10k/X 1% 402 COMMON
R772 0ohm/X 402 0.05 ohm COMMON
1V8_HV_AIN
1V8_HV_VCC
1V8_HV_PGOOD
1V8_HV_PFM
1V8_HV_EN
1V8_HV_SS
C124 2.2n/4/X7R/50V/K 16V 10% X7R 402 COMMON
U14
GS9216TQ-R
GS9216TQ-R/TQFN23-4*4
QFN23_PIR
COMMON
21 VCC
1 PGOOD
3 PFM*
2 EN/DSG
23 SS
4 AGND
VIN 7
VIN 8
VIN 9
VIN 22
VIN 24
TON 6
BST 20
SW 10
SW 11
SW 16
SW 17
SW 18
SW 25
ISET 19
FB 5
PGND 12
PGND 13
PGND 14
PGND 15
0.6V
R215 0/4 402 0.05 ohm COMMON
12V 0.300
12V_PEX8_F1_RTD3
PS_1V8_HV_TON
R210 255K/4/1 402 1% COMMON
PS_1V8_HV_BSTR
PS_1V8_HV_BST
R229 0/4 402 0.05 ohm COMMON
C144 0.1u/4/X7R/16V/K 402 16V 10% X7R COMMON
C1167 0.1u/4/X7R/16V/K 16V 10% X7R 402 COMMON
C1170 10uF/X 16V 10% X5R 805 COMMON
C1171 16V 20% X6S
PCB CO-LAYOUT
16V 20% X6S 0603W COMMON
C1172 10uF/X 16V 10% X5R 805 COMMON
PCB CO-LAYOUT
GND
L23 130-1283-000 2.2uH SMD_6X6 COMMON
L24 130-1162-000 COMMON 7_6X7
L22 130-1025-000 7_6X COMMON
L25 2.2u
PCB CO
0.125
PS_1V8_PHASE
1V8_HV_OCSET
R230 6.81K/4/1 402 1% COMMON
C1168 10nF/X 16V 10% X5R 402 COMMON
R758 0ohm/X 0.05 ohm 402 COMMON
C1165 1nF/X 50V 10% X7R 402 COMMON
R756 1ohm/X 1% 805 COMMON
PS_1V8_SNUB
R239 150K/4/1 402 1% COMMON
C1181
100p/4/NPO/50V/J 402 50V 5% C0G COMMON
R779 10K/4/1 402 1% COMMON
PS_1V8_HV_FB_SENSE
PS_1V8_HV_FB
R769 4.99K/4/1 1% 402 COMMON
C214 1n/4/X7R/50V/K 16V 10% X5R 402 COMMON
C213 1nF/X 402 16V 10% X5R COMMON
1.8V 8A 0.300
R784 100/4/1 402 5% COMMON
R778 0/4 402 0.05 ohm COMMON
1V8
C1137 47u/8/X5R/6.3V/M 4V 20% X6S 805 COMMON
C1127 47u/8/X5R/6.3V/M 4V 20% X6S 805 COMMON
C1118 47uF/X 4V 20% X5R 805 COMMON
C215 47uF/X 6.3V 20% X6S 1206 COMMON
C208 47uF/X 6.3V 20% X6S 1206 COMMON
1V8
GND

ASSEMBLY <ASSEMBLY_DESCRIPTION>
PAGE DETAIL PS: 1V8

ALL NVIDIA DESIGN SPECIFICATIONS, REFERENCE SPECIFICATIONS, REFERENCE BOARDS, FILES, DRAWINGS, DIAGNOSTICS, LISTS AND OTHER DOCUMENTS OR INFORMATION (TOGETHER AND SEPARATELY, 'MATERIALS') ARE BEING PROVIDED 'AS IS'. THE MATERIALS MAY CONTAIN KNOWN AND UNKNOWN VIOLATIONS OR DEVIATIONS OF INDUSTRY STANDARDS AND SPECIFICATIONS. NVIDIA MAKES NO WARRANTIES, EXPRESSED, IMPLIED, STATUTORY OR OTHERWISE WITH RESPECT TO THE MATERIALS OR OTHERWISE, AND EXPRESSLY DISCLAIMS ALL IMPLIED WARRANTIES INCLUDING, WITHOUT LIMITATION, THE WARRANTIES OF DESIGN, OF NONINFRINGEMENT, MERCHANTABILITY OR FITNESS FOR A PARTICULAR PURPOSE, OR ARISING FROM A COURSE OF DEALING, TRADE USAGE, TRADE PRACTICE, OR INDUSTRY STANDARDS.

GIGABYTE

Title
Page29: PS: 1V8

Size	Document Number	Rev
Custom	GV-N3070AORUS M-8GD	1.0

Date: Tuesday, August 04, 2020 Sheet 29 of 57

Page30: PS: 5V

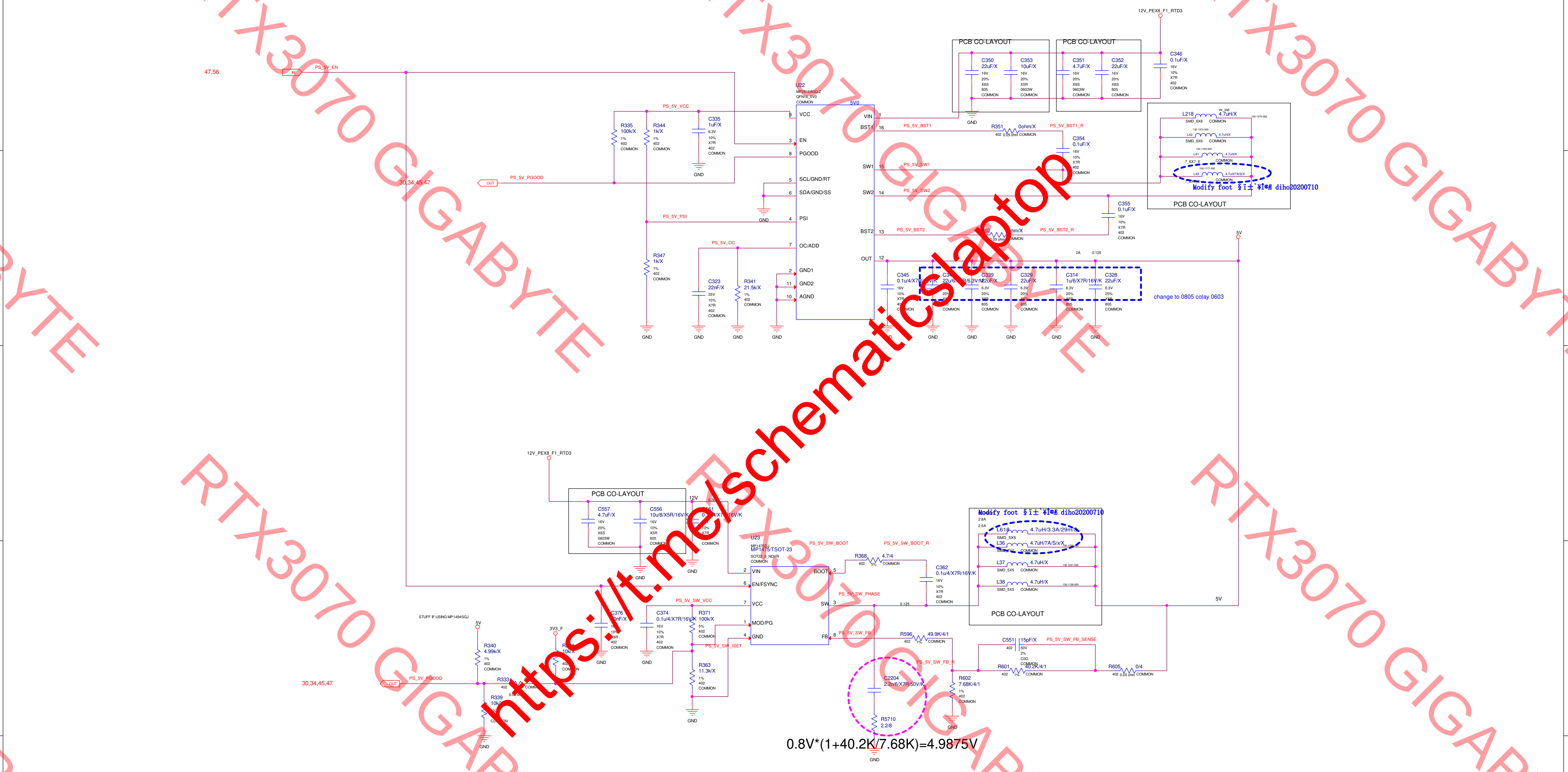

47,56
IN
PS_5V_EN
PS_5V_VCC
R335
100k/X
1%
402
COMMON
R344
1k/X
1%
402
COMMON
C335
1uF/X
6.3V
10%
X7R
402
COMMON
GND
30,34,45,47
OUT
PS_5V_PGOOD
PS_5V_PSI
R347
1k/X
1%
402
COMMON
PS_5V_OC
C323
22nF/X
25V
10%
X7R
402
COMMON
R341
21.5k/X
1%
402
COMMON
U22
MP28168GQ-Z
QFN16_5V0
COMMON
5V0
VCC
EN
PGOOD
SCL/GND/RT
SDA/GND/SS
PSI
OC/ADD
GND1
GND2
AGND
VIN
BST1
SW1
SW2
BST2
OUT
PS_5V_BST1
R351
0ohm/X
402 0.05 ohm COMMON
PS_5V_BST1_R
C354
0.1uF/X
16V
10%
X7R
402
COMMON
PS_5V_SW1
PS_5V_SW2
C355
0.1uF/X
16V
10%
X7R
402
COMMON
PS_5V_BST2
PS_5V_BST2_R
12V_PEX8_F1_RTD3
PCB CO-LAYOUT
C350
22uF/X
16V
20%
X6S
805
COMMON
C353
10uF/X
16V
20%
X5R
0603W
COMMON
C351
4.7uF/X
16V
20%
X6S
0603W
COMMON
C352
22uF/X
16V
20%
X6S
805
COMMON
C346
0.1uF/X
16V
10%
X7R
402
COMMON
L218
nv_ind
4.7uH/X
SMD_6X6
COMMON
130-1375-000
L42
4.7uH/X
L41
4.7uH/X
7_6X7_6
130-1193-000
L43
4.7uH/7A/S/X
130-1177-000
Modify foot §ï±`¥Î®Æ diho20200710
5V
2A
0.125
C345
0.1u/4/X7R/16V/K
C339
22uF/X
C329
22uF/X
C314
1u/6/X7R/16V/K
C328
22uF/X
6.3V
20%
X6S
805
COMMON
change to 0805 colay 0603
C557
4.7uF/X
16V
20%
X6S
0603W
COMMON
C556
10u/8/X5R/16V/K
16V
10%
X5R
805
COMMON
12V
C561
0.1u/4/X7R/16V/K
U23
MP1475DJ
MP1475/TSOT-23
SOT23_8_NOVR
COMMON
VIN
EN/FSYNC
VCC
MOD/PG
GND
BOOT
SW
FB
PS_5V_SW_BOOT
PS_5V_SW_BOOT_R
R368
4.7/4
402 5% COMMON
C362
0.1u/4/X7R/16V/K
16V
10%
X7R
402
COMMON
PS_5V_SW_PHASE
0.125
PS_5V_SW_VCC
C376
10nF/X
C374
0.1u/4/X7R/16V/K
16V
10%
X7R
402
COMMON
R371
100k/X
5%
402
COMMON
PS_5V_SW_ISET
R363
11.3k/X
1%
402
COMMON
STUFF IF USING MP1494SGJ
5V
R340
4.99k/X
1%
402
COMMON
3V3_F
R334
10k/X
R333
R339
10k/X
PS_5V_SW_FB
R596
49.9K/4/1
402 1% COMMON
C2204
2.2n/6/X7R/50V/K
R5710
2.2/8
PS_5V_SW_FB_R
R602
7.68K/4/1
1%
402
COMMON
C551
15pF/X
402
50V
2%
C0G
COMMON
PS_5V_SW_FB_SENSE
R601
40.2K/4/1
402 1% COMMON
R605
0/4
402 0.05 ohm COMMON
Modify foot §ï±`¥Î®Æ diho20200710
2.8A
2.5A
L618
4.7uH/3.3A/29m/S
SMD_5X5
L36
4.7uH/7A/S/x/X
SMD_7X7
130-1260-000
L37
4.7uH/X
SMD_5X5
130-1241-000
L38
4.7uH/X
SMD_5X5
130-1138-000
PCB CO-LAYOUT
0.8V*(1+40.2K/7.68K)=4.9875V

ASSEMBLY
PAGE DETAIL

<ASSEMBLY_DESCRIPTION>
PS: 5V

ALL NVIDIA DESIGN SPECIFICATIONS, REFERENCE SPECIFICATIONS, REFERENCE BOARDS, FILES, DRAWINGS, DIAGNOSTICS, LISTS AND OTHER DOCUMENTS OR INFORMATION (TOGETHER AND SEPARATELY, 'MATERIALS') ARE BEING PROVIDED 'AS IS'. THE MATERIALS MAY CONTAIN KNOWN AND UNKNOWN VIOLATIONS OR DEVIATIONS OF INDUSTRY STANDARDS AND SPECIFICATIONS. NVIDIA MAKES NO WARRANTIES, EXPRESSED, IMPLIED, STATUTORY OR OTHERWISE WITH RESPECT TO THE MATERIALS OR OTHERWISE, AND EXPRESSLY DISCLAIMS ALL IMPLIED WARRANTIES INCLUDING, WITHOUT LIMITATION, THE WARRANTIES OF DESIGN, OF NONINFRINGEMENT, MERCHANTABILITY OR FITNESS FOR A PARTICULAR PURPOSE, OR ARISING FROM A COURSE OF DEALING, TRADE USAGE, TRADE PRACTICE, OR INDUSTRY STANDARDS.

GIGABYTE

Title
Page30: PS: 5V

Size: Custom
Document Number: GV-N3070AORUS M-8GD
Rev: 1.0
Date: Thursday, August 06, 2020
Sheet 30 of 57

Page31: PS: PEXVDD

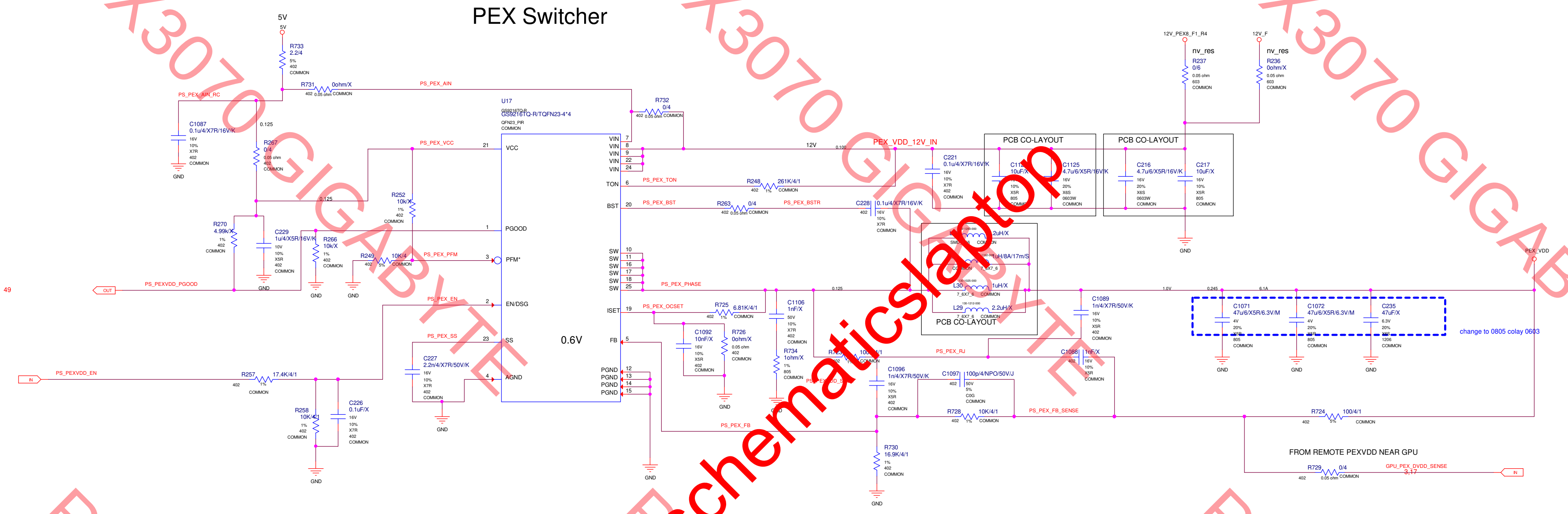
PEX Switcher
5V
R733
2.2/4
5%
402
COMMON
R731
0ohm/X
402 0.05 ohm COMMON
PS_PEX_AIN
PS_PEX_AIN_RC
C1087
0.1u/4/X7R/16V/K
16V
10%
X7R
402
COMMON
GND
0.125
R267
0/4
0.05 ohm
402
COMMON
PS_PEX_VCC
0.125
R252
10k/X
1%
402
COMMON
R270
4.99k/X
C229
1u/4/X5R/16V/K
10V
10%
X5R
R266
10k/X
R249
10K/4
5%
PS_PEX_PFM
49
OUT
PS_PEXVDD_PGOOD
PS_PEX_EN
PS_PEX_SS
C227
2.2n/4/X7R/50V/K
48
IN
PS_PEXVDD_EN
R257
17.4K/4/1
R258
10K/4/1
C226
0.1uF/X
U17
GS9216TQ-R
GS9216TQ-R/TQFN23-4*4
QFN23_PIR
COMMON
21 VCC
1 PGOOD
3 PFM*
2 EN/DSG
23 SS
4 AGND
0.6V
VIN 7
VIN 8
VIN 9
VIN 22
VIN 24
TON 6
BST 20
SW 10
SW 11
SW 16
SW 17
SW 18
SW 25
ISET 19
FB 5
PGND 12
PGND 13
PGND 14
PGND 15
R732
0/4
12V
0.100
PEX_VDD_12V_IN
PS_PEX_TON
R248
261K/4/1
PS_PEX_BST
R263
0/4
PS_PEX_BSTR
C228
0.1u/4/X7R/16V/K
C221
0.1u/4/X7R/16V/K
PCB CO-LAYOUT
C112
10uF/X
805
C1125
4.7u/6/X5R/16V/K
X6S
0603W
PCB CO-LAYOUT
C216
4.7u/6/X5R/16V/K
C217
10uF/X
12V_PEX8_F1_R4
12V_F
nv_res
R237
0/6
603
nv_res
R236
0ohm/X
2uH/X
SMD
1uH/8A/17m/S
7_6X7_6
L30
1uH/X
L29
2.2uH/X
PCB CO-LAYOUT
PS_PEX_PHASE
0.125
PS_PEX_OCSET
R725
6.81K/4/1
C1092
10nF/X
R726
0ohm/X
C1106
1nF/X
50V
R734
1ohm/X
R723
100/4/1
PS_PEX_RJ
C1096
1n/4/X7R/50V/K
C1097
100p/4/NPO/50V/J
C0G
R728
10K/4/1
PS_PEX_FB_SENSE
PS_PEX_FB
R730
16.9K/4/1
C1089
1n/4/X7R/50V/K
C1088
1nF/X
1.0V
0.245
6.1A
C1071
47u/6/X5R/6.3V/M
4V
C1072
47u/6/X5R/6.3V/M
C235
47uF/X
6.3V
1206
change to 0805 colay 0603
PEX_VDD
R724
100/4/1
FROM REMOTE PEXVDD NEAR GPU
R729
0/4
GPU_PEX_DVDD_SENSE
3,17
IN
GND

0.6V*(1+10K/16.9K)=0.955V

ASSEMBLY <ASSEMBLY_DESCRIPTION>
PAGE DETAIL PS: PEXVDD

ALL NVIDIA DESIGN SPECIFICATIONS, REFERENCE SPECIFICATIONS, REFERENCE BOARDS, FILES, DRAWINGS, DIAGNOSTICS, LISTS AND OTHER DOCUMENTS OR INFORMATION (TOGETHER AND SEPARATELY, 'MATERIALS') ARE BEING PROVIDED 'AS IS'. THE MATERIALS MAY CONTAIN KNOWN AND UNKNOWN VIOLATIONS OR DEVIATIONS OF INDUSTRY STANDARDS AND SPECIFICATIONS. NVIDIA MAKES NO WARRANTIES, EXPRESSED, IMPLIED, STATUTORY OR OTHERWISE WITH RESPECT TO THE MATERIALS OR OTHERWISE, AND EXPRESSLY DISCLAIMS ALL IMPLIED WARRANTIES INCLUDING, WITHOUT LIMITATION, THE WARRANTIES OF DESIGN, OF NONINFRINGEMENT, MERCHANTABILITY OR FITNESS FOR A PARTICULAR PURPOSE, OR ARISING FROM A COURSE OF DEALING, TRADE USAGE, TRADE PRACTICE, OR INDUSTRY STANDARDS.

GIGABYTE
Title
Page31: PS: PEXVDD
Size Custom
Document Number GV-N3070AORUS M-8GD
Rev 1.0
Date: Tuesday, August 04, 2020
Sheet 31 of 57

Page32: PS: FBVDDQ

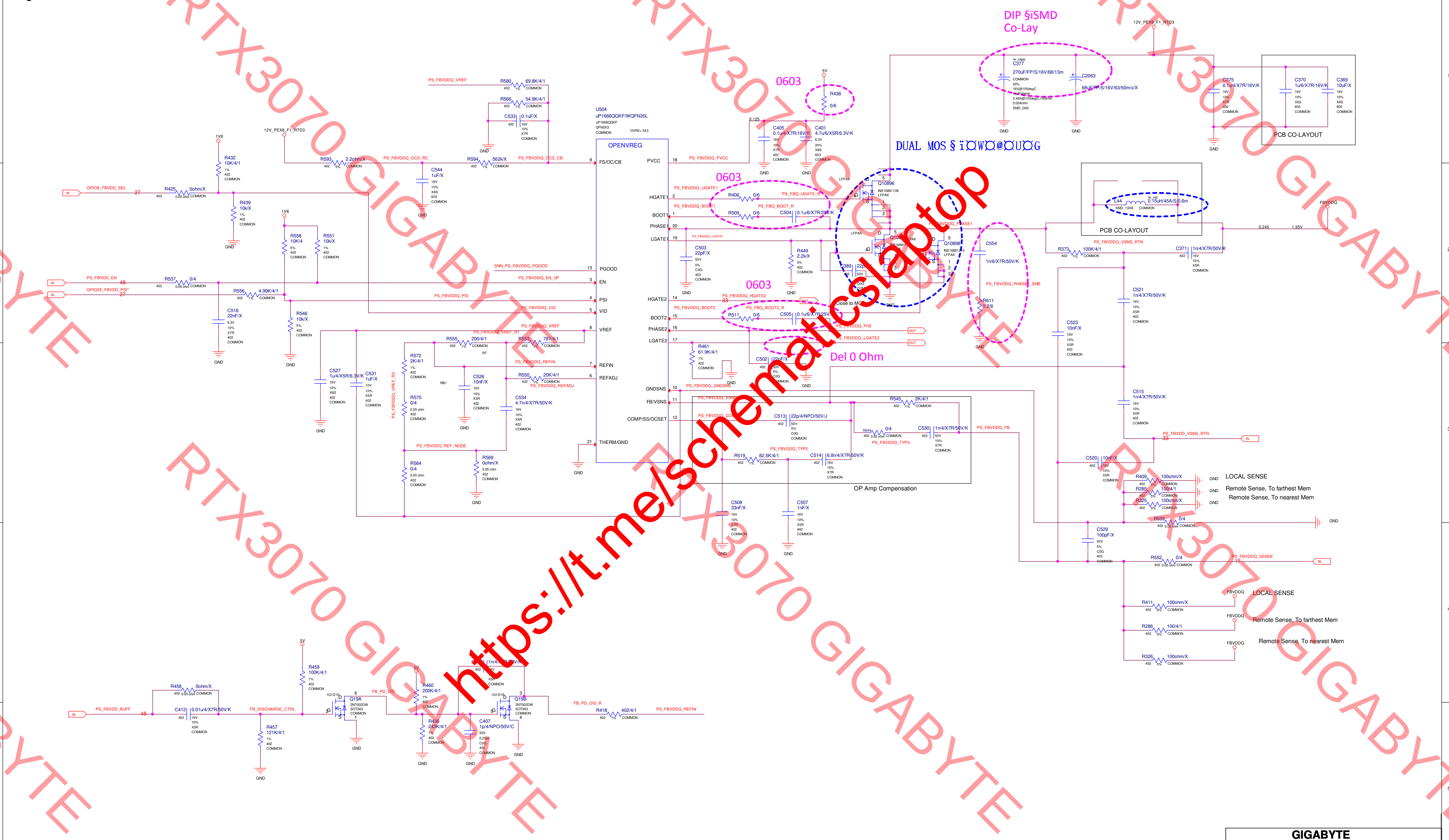
DIP §ïSMD
Co-Lay
0603
0603
0603
DUAL MOS §ïWO@OUOG
Del 0 Ohm
Close to MOS
PCB CO-LAYOUT
PCB CO-LAYOUT
OP Amp Compensation
LOCAL SENSE
Remote Sense, To farthest Mem
Remote Sense, To nearest Mem
LOCAL SENSE
Remote Sense, To farthest Mem
Remote Sense, To nearest Mem
U504
uP1666QQKF/WQFN20L
uP1666QQKF
QFN3X3
COMMON
OVR2+ 3X3
OPENVREG
FS/OC/CB 9
PGOOD 13
EN 3
PSI 4
VID 5
VREF 8
REFIN 7
REFADJ 6
THERM/GND 21
PVCC 18
HGATE1 2
BOOT1 1
PHASE1 20
LGATE1 19
HGATE2 14
BOOT2 15
PHASE2 16
LGATE2 17
GNDSNS 10
FB/VSNS 11
COMP/SS/OCSET 12
GPIO8_FBVDD_SEL 27
PS_FBVDD_EN 48
GPIO25_FBVDD_PSI* 27
PS_FBVDD_BUFF 48
PS_FBVDD_VSNS_RTN 33
PS_FBVDDQ_SENSE 15
PS_FBVDDQ_VREF
PS_FBVDDQ_OCS_RC
PS_FBVDDQ_OCS_CB
SNN_PS_FBVDDQ_PGOOD
PS_FBVDDQ_EN_UP
PS_FBVDDQ_PSI
PS_FBVDDQ_VID
PS_FBVDDQ_VREF_R1
PS_FBVDDQ_VREF_R3
PS_FBVDDQ_REFIN
PS_FBVDDQ_REFADJ
PS_FBVDDQ_REF_NODE
PS_FBVDDQ_PVCC
PS_FBVDDQ_UGATE1
PS_FBQ_UGATE_R
PS_FBVDDQ_BOOT1
PS_FBQ_BOOT_R
PS_FBVDDQ_PHASE1
PS_FBVDDQ_LGATE1
PS_FBVDDQ_HGATE2 33
PS_FBVDDQ_BOOT2
PS_FBQ_BOOT2_R
PS_FBVDDQ_PH2
PS_FBVDDQ_LGATE2
PS_FBVDDQ_GNDSNS
PS_FBVDDQ_VSNS
PS_FBVDDQ_COMP
PS_FBVDDQ_TYP2
PS_FBVDDQ_TYP3
PS_FBVDDQ_FB
PS_FBVDDQ_PHASE1_SNB
PS_FBVDDQ_VSNS_RTN
FB_DISCHARGE_CTRL
FB_PD_DIS
FB_PD_DIS_R
1V8
1V8
5V
5V
5V
12V_PEX8_F1_RTD3
12V_PEX8_F1_RTD3
FBVDDQ
0.125
0.245
1.35V
R425 0ohm/X 402 0.05 ohm COMMON
R432 10K/4/1 1% 402 COMMON
R439 10k/X 1% 402 COMMON
R537 0/4 402 0.05 ohm COMMON
R556 4.99K/4/1 402 1% COMMON
C516 22nF/X 6.3V 10% X7R 402 COMMON
R558 10K/4 5% 402 COMMON
R551 10k/X 1% 402 COMMON
R546 10k/X 5% 402 COMMON
R593 2.2ohm/X 402 5% COMMON
C544 1uF/X 16V 10% X6S 603 COMMON
R594 562k/X 402 1% COMMON
R580 69.8K/4/1 402 1% COMMON
R566 54.9K/4/1 402 1% COMMON
C533 0.1uF/X 402 16V 10% X7R COMMON
C527 1u/4/X5R/6.3V/K 16V 10% X6S 402 COMMON
C531 1uF/X 10V 10% X5R 402 COMMON
R555 200/4/1 402 1% COMMON RT
R553 787/4/1 402 1% COMMON
R572 2K/4/1 1% 402 COMMON
RB1
C526 10nF/X 16V 10% X5R 402 COMMON
R550 20K/4/1 402 1% COMMON
C534 4.7n/4/X7R/50V/K 16V 10% X5R 402 COMMON
R570 0/4 0.05 ohm 402 COMMON
R564 0/4 0.05 ohm 402 COMMON
R569 0ohm/X 0.05 ohm 402 COMMON
R438 0/6
C405 0.1u/4/X7R/16V/K 16V 10% X7R 402 COMMON
C401 4.7u/6/X5R/6.3V/K 6.3V 20% X6S 603 COMMON
R406 0/6
R509 0/6
C504 0.1u/6/X7R/25V/K
C503 22pF/X 50V 5% C0G 402 COMMON
R449 2.2k/X 5% 402 COMMON
C389 22pF/X 402 50V C0G COMMON
R511 0/6
C505 0.1u/6/X7R/25V/K
R461 61.9K/4/1 1% 402 COMMON
C502 22pF/X 402 50V 5% C0G COMMON
Q10896 INS16881138 LFPAK
Q10897 INS16881138 LFPAK
Q10898 INS16881210 LFPAK
LFPAK
nv_capp
C377 270uF/FP/S/16V/68/13m COMMON 20% 16V@105degC AL-Polymer 2.49A@105degC,100KHz 0.024ohm SMD_D60
C2063 68uF/FP/S/16V/63/50m/x/X
C375 0.1u/4/X7R/16V/K 16V 10% X7R 402 COMMON
C370 1u/6/X7R/16V/K 16V 10% X6S 603 COMMON
C369 10uF/X 16V 10% X6S 805 COMMON
nv_ind
L44 0.15uH/45A/S/0.6m SMD_13X8 COMMON
C554 1n/6/X7R/50V/K
R611 2.2/8
R373 100K/4/1 402 1% COMMON
C371 1n/4/X7R/50V/K 402 16V 10% X5R COMMON
C521 1n/4/X7R/50V/K 16V 10% X5R 402 COMMON
C523 10nF/X 16V 10% X5R 402 COMMON
C515 1n/4/X7R/50V/K 16V 10% X5R 402 COMMON
R545 2K/4/1 402 1% COMMON
C513 22p/4/NPO/50V/J 402 50V 5% C0G COMMON
R544 0/4 402 0.05 ohm COMMON
C530 1n/4/X7R/50V/K 402 50V 10% X7R COMMON
R519 82.5K/4/1 402 1% COMMON
C514 6.8n/4/X7R/50V/K 402 16V 10% X7R COMMON
C508 33nF/X 16V 10% X7R 402 COMMON
C507 1nF/X 16V 10% X5R 402 COMMON
C520 10nF/X 402 16V 10% X5R COMMON
R409 100ohm/X 402 5% COMMON
R285 100/4/1 402 5% COMMON
R325 100ohm/X 402 5% COMMON
R559 0/4 402 0.05 ohm COMMON
C529 100pF/X 50V 5% C0G 402 COMMON
R552 0/4 402 0.05 ohm COMMON
R411 100ohm/X 402 5% COMMON
R286 100/4/1 402 5% COMMON
R326 100ohm/X 402 5% COMMON
R458 0ohm/X 402 0.05 ohm COMMON
C412 0.01u/4/X7R/50V/K 402 16V 10% X5R COMMON
R457 121K/4/1 1% 402 COMMON
R459 100K/4/1 1% 402 COMMON
Q19A 2N7002DW SOT363 COMMON 1G1D1S
R460 200K/4/1 1% 402 COMMON
R436 243K/4/1 1% 402 COMMON
C406 1n/4/X7R/50V/K 402 16V X5R COMMON
C407 1p/4/NPO/50V/C 50V 0.25pF C0G 402 COMMON
Q19B 2N7002DW SOT363 COMMON 1G1D1S
R418 402/4/1 402 1% COMMON
PS_FBVDDQ_REFIN
IN
OUT
GND

ASSEMBLY | <ASSEMBLY_DESCRIPTION>
PAGE DETAIL | PS: FBVDDQ

ALL NVIDIA DESIGN SPECIFICATIONS, REFERENCE SPECIFICATIONS, REFERENCE BOARDS, FILES, DRAWINGS, DIAGNOSTICS, LISTS AND OTHER DOCUMENTS OR INFORMATION (TOGETHER AND SEPARATELY, 'MATERIALS') ARE BEING PROVIDED 'AS IS'. THE MATERIALS MAY CONTAIN KNOWN AND UNKNOWN VIOLATIONS OR DEVIATIONS OF INDUSTRY STANDARDS AND SPECIFICATIONS. NVIDIA MAKES NO WARRANTIES, EXPRESSED, IMPLIED, STATUTORY OR OTHERWISE WITH RESPECT TO THE MATERIALS OR OTHERWISE, AND EXPRESSLY DISCLAIMS ALL IMPLIED WARRANTIES INCLUDING, WITHOUT LIMITATION, THE WARRANTIES OF DESIGN, OF NONINFRINGEMENT, MERCHANTABILITY OR FITNESS FOR A PARTICULAR PURPOSE, OR ARISING FROM A COURSE OF DEALING, TRADE USAGE, TRADE PRACTICE, OR INDUSTRY STANDARDS.

GIGABYTE

Title
Page32: PS: FBVDDQ

Size Custom | Document Number GV-N3070AORUS M-8GD | Rev 1.0

Date: Thursday, August 06, 2020 | Sheet 32 of 57

Page33: PS: FBVDDQ PH2

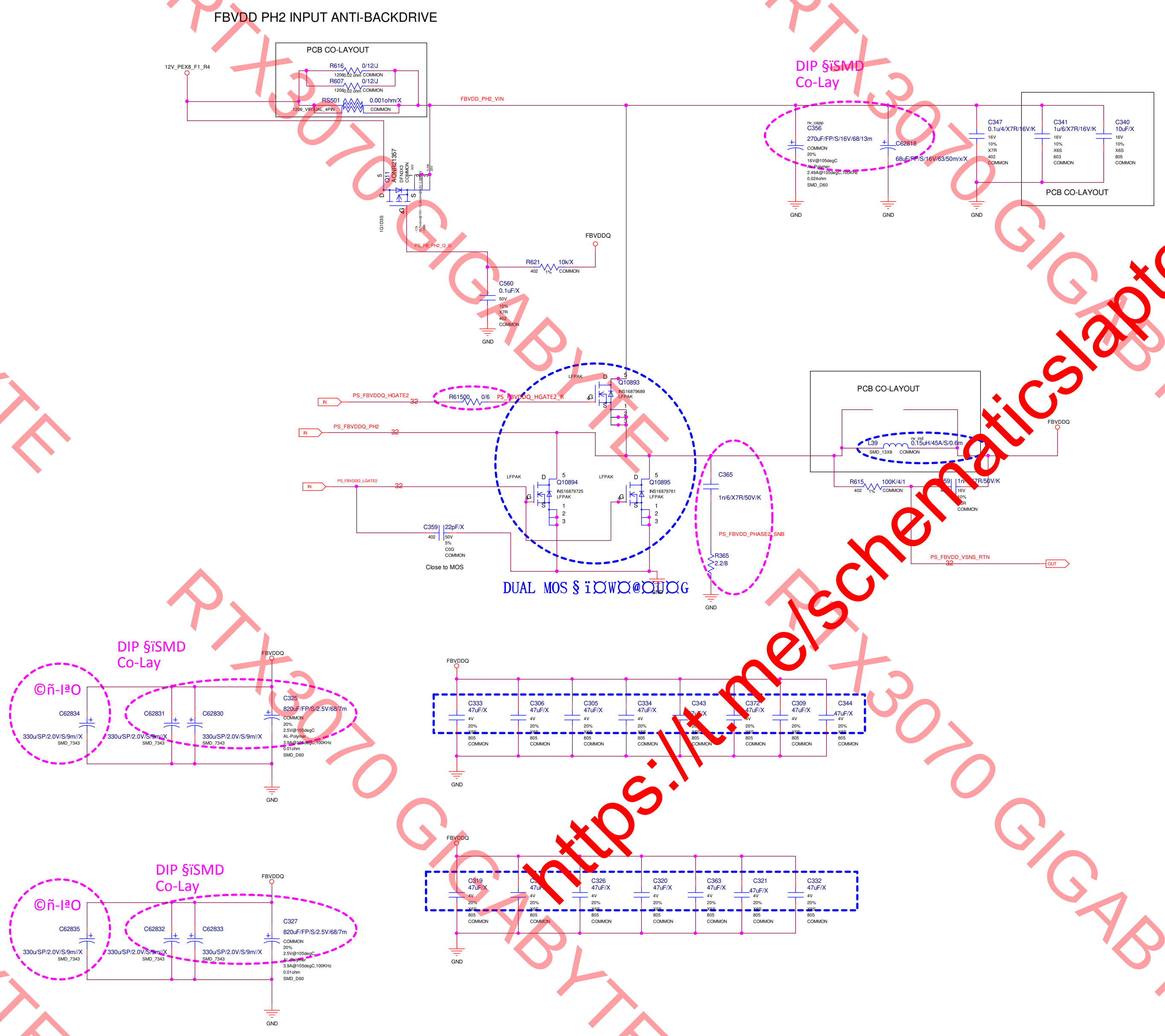
FBVDD PH2 INPUT ANTI-BACKDRIVE
PCB CO-LAYOUT
12V_PEX8_F1_R4
R616 0/12/J 1206 0.02ohm COMMON
R607 0/12/J 1206 0.02ohm COMMON
RS501 0.001ohm/X 1206_VIRTUAL_4PIN COMMON
FBVDD_PH2_VIN
Q11 AONR21357 DFN3X3 COMMON
D S G
FBVDDQ
R621 10k/X 402 1% COMMON
C560 0.1uF/X 50V 10% X7R 402 COMMON
GND
DIP §ïSMD Co-Lay
nv_capp C356 270uF/FP/S/16V/68/13m COMMON 20% 16V@105degC AL-Polymer 2.49A@100degC,100KHz 0.024ohm SMD_D60
C62818 68uF/FP/S/16V/63/50m/x/X
C347 0.1u/4/X7R/16V/K 16V 10% X7R 402 COMMON
C341 1u/6/X7R/16V/K 16V 10% X6S 603 COMMON
C340 10uF/X 16V 10% X6S 805 COMMON
PCB CO-LAYOUT
GND
IN PS_FBVDDQ_HGATE2 32
R61500 0/6
PS_FBVDDQ_HGATE2_R
LFPAK
Q10893 INS16879689 LFPAK
IN PS_FBVDDQ_PH2 32
IN PS_FBVDDQ_LGATE2 32
Q10894 INS16879725 LFPAK
Q10895 INS16879761 LFPAK
C359 22pF/X 402 50V 5% C0G COMMON
Close to MOS
DUAL MOS § ïWO@OUOG
C365 1n/6/X7R/50V/K
PS_FBVDD_PHASE2_SNB
R365 2.2/8
GND
PCB CO-LAYOUT
L39 nv_ind 0.15uH/45A/S/0.6m SMD_13X8 COMMON
FBVDDQ
R615 100K/4/1 402 1% COMMON
C59 1n/6/X7R/50V/K 16V 10% X7R COMMON
PS_FBVDD_VSNS_RTN 32 OUT
DIP §ïSMD Co-Lay
©ñ-IªO
FBVDDQ
C62834 330u/SP/2.0V/S/9m//X SMD_7343
C62831 330u/SP/2.0V/S/9m//X SMD_7343
C62830 330u/SP/2.0V/S/9m//X SMD_7343
C325 820uF/FP/S/2.5V/68/7m COMMON 20% 2.5V@105degC AL-Polymer 3.9A@105degC,100KHz 0.01ohm SMD_D60
GND
FBVDDQ
C333 47uF/X
C306 47uF/X
C305 47uF/X
C334 47uF/X
C343 47uF/X
C372 47uF/X
C309 47uF/X
C344 47uF/X
4V 20% X6S 805 COMMON
GND
FBVDDQ
C319 47uF/X
C3__ 47uF/X
C326 47uF/X
C320 47uF/X
C363 47uF/X
C321 47uF/X
C332 47uF/X
4V 20% X6S 805 COMMON
GND
DIP §ïSMD Co-Lay
©ñ-IªO
FBVDDQ
C62835 330u/SP/2.0V/S/9m//X SMD_7343
C62832 330u/SP/2.0V/S/9m//X SMD_7343
C62833 330u/SP/2.0V/S/9m//X SMD_7343
C327 820uF/FP/S/2.5V/68/7m COMMON 20% 2.5V@105degC AL-Polymer 3.9A@105degC,100KHz 0.01ohm SMD_D60
GND

ASSEMBLY
PAGE DETAIL

<ASSEMBLY_DESCRIPTION>
PS: FBVDDQ PH2

ALL NVIDIA DESIGN SPECIFICATIONS, REFERENCE SPECIFICATIONS, REFERENCE BOARDS, FILES, DRAWINGS, DIAGNOSTICS, LISTS AND OTHER DOCUMENTS OR INFORMATION (TOGETHER AND SEPARATELY, 'MATERIALS') ARE BEING PROVIDED 'AS IS'. THE MATERIALS MAY CONTAIN KNOWN AND UNKNOWN VIOLATIONS OR DEVIATIONS OF INDUSTRY STANDARDS AND SPECIFICATIONS. NVIDIA MAKES NO WARRANTIES, EXPRESSED, IMPLIED, STATUTORY OR OTHERWISE WITH RESPECT TO THE MATERIALS OR OTHERWISE, AND EXPRESSLY DISCLAIMS ALL IMPLIED WARRANTIES INCLUDING, WITHOUT LIMITATION, THE WARRANTIES OF DESIGN, OF NONINFRINGEMENT, MERCHANTABILITY OR FITNESS FOR A PARTICULAR PURPOSE, OR ARISING FROM A COURSE OF DEALING, TRADE USAGE, TRADE PRACTICE, OR INDUSTRY STANDARDS.

GIGABYTE	
Title	Page33: PS: FBVDDQ PH2
Size: Custom	Document Number: GV-N3070AORUS M-8GD
Rev	1.0
Date: Thursday, August 06, 2020	Sheet 33 of 57

Page34: NVVDD CTR

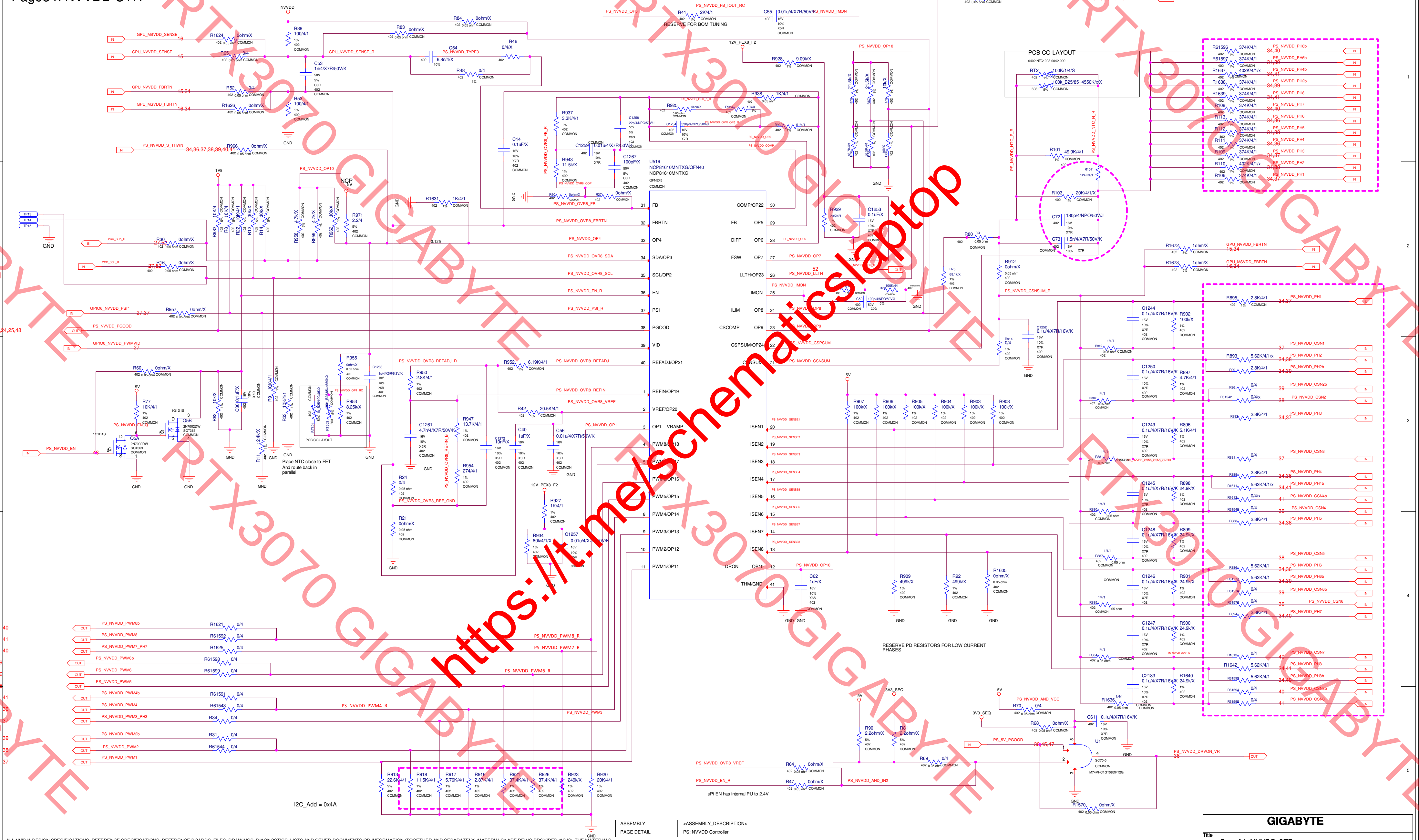

NVVDD
GPU_MSVDD_SENSE 16
GPU_NVVDD_SENSE 15
GPU_NVVDD_FBRTN 15,34
GPU_MSVDD_FBRTN 16,34
PS_NVVDD_S_THWN 34,36,37,38,39,40,41
R1624 0ohm/X
R65 0/4
R52 0/4
R1626 0ohm/X
R966 0ohm/X
R88 100/4/1
R53 100/4/1
C53 1n/4/X7R/50V/K
GPU_NVVDD_SENSE_R
R84 0ohm/X
R83 0ohm/X
C54 6.8n/4/X
PS_NVVDD_TYPE3
R46 0/4/X
R48 0/4
C14 0.1uF/X
PS_NVVDD_FB_IOUT_RC
PS_NVVDD_OP5
R41 2K/4/1
RESERVE FOR BOM TUNING
C55 0.01u/4/X7R/50V/K
PS_NVVDD_IMON
12V_PEX8_F2
R928 9.09k/X
R938 1K/4/1
R925 0ohm/X
R924 10k/X
R939 51/4/1
C1254 330p/4/NPO/50V/J
C1258 22p/4/NPO/50V/J
R937 3.3K/4/1
R943 11.5k/X
C1259 0.01u/4/X7R/50V/K
C1267 100pF/X
PS_NVVDD_OVR8_FB_R
PS_NVVDD_OVR8_COP
R40 0ohm/X
R37 0ohm/X
PS_NVVDD_OVR8_FB
U519
NCP81610MNTXG/QFN40
NCP81610MNTXG
QFN5X5
FB 31
FBRTN 32
OP4 33
SDA/OP3 34
SCL/OP2 35
EN 36
PSI 37
PGOOD 38
VID 39
REFADJ/OP21 40
REFIN/OP19 1
VREF/OP20 2
OP1 VRAMP 3
PWM8/OP18 4
PWM7/OP17 5
PWM6/OP16 6
PWM5/OP15 7
PWM4/OP14 8
PWM3/OP13 9
PWM2/OP12 10
PWM1/OP11 11
COMP/OP22 30
FB OP5 29
DIFF OP6 28
FSW OP7 27
LLTH/OP23 26
IMON 25
ILIM OP8 24
CSCOMP OP9 23
CSPSUM/OP24 22
CSNSUM 21
ISEN1 20
ISEN2 19
ISEN3 18
ISEN4 17
ISEN5 16
ISEN6 15
ISEN7 14
ISEN8 13
DRON OP10 12
THM/GND 41
PS_NVVDD_OVR8_FBRTN
PS_NVVDD_OP4
PS_NVVDD_OVR8_SDA
PS_NVVDD_OVR8_SCL
PS_NVVDD_EN_R
PS_NVVDD_PSI_R
PS_NVVDD_OVR8_REFADJ
PS_NVVDD_OVR8_REFADJ_R
PS_NVVDD_OVR8_REFIN
PS_NVVDD_OVR8_VREF
PS_NVVDD_OP1
PS_NVVDD_OP10
PS_NVVDD_OP7
PS_NVVDD_LLTH 52
PS_NVVDD_OP8
PS_NVVDD_OP9
PS_NVVDD_CSPSUM
PS_NVVDD_CSNSUM
TP13
TP14
TP15
I2CC_SDA_R 27,52
I2CC_SCL_R 27,52
R30 0ohm/X
R16 0ohm/X
1V8
R982 10K/4
R8 10K/4
R22 10K/4/1
R12 10k/X
R14 10k/X
R958 4.7k/X
R959 4.7k/X
R962 10k/X
NCP 5V
R971 2.2/4
R1631 1K/4/1
GPIO6_NVVDD_PSI* 27,37
R957 0ohm/X
PS_NVVDD_PGOOD 23,24,25,48
GPIO0_NVVDD_PWMVID 27
R60 0ohm/X
5V
R77 10K/4/1
PS_NVVDD_EN_Q
Q5A 2N7002DW SOT363
Q5B 2N7002DW SOT363
PS_NVVDD_EN 48
R62 10k/X
C30 0.1uF/X
R9 10K/4/1
R33 10K/4/1
R11 12.4k/X
R955 0ohm/X
C1266 1u/4/X5R/6.3V/K
RT504 1k_B25/100=0K/X
RT503 100k_B25/85=4550K/X
PS_NVVDD_OP4_RC
R953 8.25k/X
PCB CO-LAYOUT
Place NTC close to FET And route back in parallel
R950 2.8K/4/1
C1261 4.7n/4/X7R/50V/K
R947 13.7K/4/1
PS_NVVDD_OVR8_REFIN_B
R954 274/4/1
R24 0/4
PS_NVVDD_OVR8_REF_GND
R21 0ohm/X
R952 6.19K/4/1
R42 20.5K/4/1
C1272 10nF/X
C40 1uF/X
C56 0.01u/4/X7R/50V/K
R927 1K/4/1
R934 80k/4/1/X
C1257 0.01u/4/X7R/50V/K
R929 20K/4/1
C1253 0.1uF/X
R79 21.5k/X
R67 21.5k/X
R78 10k/X
R76 18.7K/4/1
R72 36.5K/4/1
R86 10k/X
R74 100K/4/1
C59 100p/4/NPO/50V/J
R75 68.1k/X
R973 0ohm/X
PCB CO-LAYOUT
0402 NTC: 093-0042-000
RT2 100K/1/4/S
RT1 100k_B25/85=4550K/x/X
PS_NVVDD_NTC_P_R
PS_NVVDD_NTC_N_R
R101 49.9K/4/1
R107 124K/4/1
R103 20K/4/1/X
C72 180p/4/NPO/50V/J
C73 1.5n/4/X7R/50V/K
R80 0/4
R912 0ohm/X
PS_NVVDD_CSNSUM_R
R914 0/4
C1252 0.1u/4/X7R/16V/K
R61596 374K/4/1 PS_NVVDD_PH8b 34,40
R61597 374K/4/1 PS_NVVDD_PH6b 34,39
R1637 402K/4/1/x PS_NVVDD_PH4b 34,41
R1638 374K/4/1 PS_NVVDD_PH2b 34,39
R1639 374K/4/1 PS_NVVDD_PH8 34,41
R108 374K/4/1 PS_NVVDD_PH7 34,40
R113 374K/4/1 PS_NVVDD_PH6 34,36
R112 374K/4/1 PS_NVVDD_PH5 34,38
R111 374K/4/1 PS_NVVDD_PH4 34,36
R109 374K/4/1 PS_NVVDD_PH3 34,37
R110 402K/4/1/x PS_NVVDD_PH2 34,38
R106 374K/4/1 PS_NVVDD_PH1 34,37
R1672 1ohm/X GPU_NVVDD_FBRTN 15,34
R1673 1ohm/X GPU_MSVDD_FBRTN 16,34
R895 2.8K/4/1 PS_NVVDD_PH1 34,37
C1244 0.1u/4/X7R/16V/K
R902 100k/X
R910 1/4/1
PS_NVVDD_CSN1 37
R893 5.62K/4/1/x PS_NVVDD_PH2 34,38
R99 2.8K/4/1 PS_NVVDD_PH2b 34,39
C1250 0.1u/4/X7R/16V/K
R897 4.7K/4/1
R96 0/4 PS_NVVDD_CSN2b 39
R882 1/4/1
R61542 0/4/x PS_NVVDD_CSN2 38
R892 2.8K/4/1 PS_NVVDD_PH3 34,37
C1249 0.1u/4/X7R/16V/K
R896 5.1K/4/1
R881 1/4/1
PS_NVVDD_CSN6_CSN3_CNTRL
R891 0/4 PS_NVVDD_CSN3 37
R889 2.8K/4/1 PS_NVVDD_PH4 34,36
R1611 5.62K/4/1/x PS_NVVDD_PH4b 34,41
C1245 0.1u/4/X7R/16V/K
R898 24.9k/X
R1612 0/4/x PS_NVVDD_CSN4b 41
R890 1/4/1
R61545 0/4 PS_NVVDD_CSN4 36
R888 2.8K/4/1 PS_NVVDD_PH5 34,38
C1248 0.1u/4/X7R/16V/K
R899 24.9k/X
R887 1/4/1
PS_NVVDD_CSN5 38
R886 5.62K/4/1 PS_NVVDD_PH6 34,36
R61577 5.62K/4/1 PS_NVVDD_PH6b 34,39
C1246 0.1u/4/X7R/16V/K
R901 24.9k/X
R61578 0/4 PS_NVVDD_CSN6b 39
R885 1/4/1
R61576 0/4 PS_NVVDD_CSN6 36
R894 2.8K/4/1 PS_NVVDD_PH7 34,40
C1247 0.1u/4/X7R/16V/K
R900 24.9k/X
R884 1/4/1
PS_NVVDD_CSN7_10
R1613 0/4 PS_NVVDD_CSN7 40
R1642 5.62K/4/1 PS_NVVDD_PH8 34,41
R61593 5.62K/4/1 PS_NVVDD_PH8b 34,40
C2183 0.1u/4/X7R/16V/K
R1640 24.9k/X
R1636 1/4/1
R61594 0/4 PS_NVVDD_CSN8b 40
R61595 0/4 PS_NVVDD_CSN8 41
R907 100k/X
R906 100k/X
R905 100k/X
R904 100k/X
R903 100k/X
R908 100k/X
PS_NVVDD_ISENSE1
PS_NVVDD_ISENSE2
PS_NVVDD_ISENSE3
PS_NVVDD_ISENSE4
PS_NVVDD_ISENSE5
PS_NVVDD_ISENSE6
PS_NVVDD_ISENSE7
PS_NVVDD_ISENSE8
C62 1uF/X
R909 499k/X
R92 499k/X
R1605 0ohm/X
RESERVE PD RESISTORS FOR LOW CURRENT PHASES
PS_NVVDD_PWM8b 40
PS_NVVDD_PWM8 41
PS_NVVDD_PWM7_PH7 40
PS_NVVDD_PWM6b 39
PS_NVVDD_PWM6 36
PS_NVVDD_PWM5 38
PS_NVVDD_PWM4b 41
PS_NVVDD_PWM4 36
PS_NVVDD_PWM3_PH3 37
PS_NVVDD_PWM2b 39
PS_NVVDD_PWM2 38
PS_NVVDD_PWM1 37
R1621 0/4
R61592 0/4
R1625 0/4
R61598 0/4
R61599 0/4
R61591 0/4
R61543 0/4
R34 0/4
R31 0/4
R61544 0/4
PS_NVVDD_PWM8_R
PS_NVVDD_PWM7_R
PS_NVVDD_PWM6_R
PS_NVVDD_PWM4_R
PS_NVVDD_PWM3
R913 22.6K/4/1
R918 11.5K/4/1
R917 5.76K/4/1
R916 2.87K/4/1
R921 37.4K/4/1
R926 37.4K/4/1
R923 249k/X
R920 20K/4/1
I2C_Add = 0x4A
5V
3V3_SEQ
R90 2.2ohm/X
R81 2.2ohm/X
R69 0/4
PS_NVVDD_OVR8_VREF
R64 0ohm/X
PS_NVVDD_EN_R
R47 0ohm/X
PS_NVVDD_AND_IN2
uPi EN has internal PU to 2.4V
PS_NVVDD_AND_VCC
R70 0/4
R68 0ohm/X
C61 0.1u/4/X7R/16V/K
PS_5V_PGOOD 30,45,47
U1
SC70-5
M74VHC1GT08DFT2G
PS_NVVDD_DRVON_VR 36
R1570 0ohm/X
GND

ASSEMBLY
PAGE DETAIL

<ASSEMBLY_DESCRIPTION>
PS: NVVDD Controller

ALL NVIDIA DESIGN SPECIFICATIONS, REFERENCE SPECIFICATIONS, REFERENCE BOARDS, FILES, DRAWINGS, DIAGNOSTICS, LISTS AND OTHER DOCUMENTS OR INFORMATION (TOGETHER AND SEPARATELY, 'MATERIALS') ARE BEING PROVIDED 'AS IS'. THE MATERIALS MAY CONTAIN KNOWN AND UNKNOWN VIOLATIONS OR DEVIATIONS OF INDUSTRY STANDARDS AND SPECIFICATIONS. NVIDIA MAKES NO WARRANTIES, EXPRESSED, IMPLIED, STATUTORY OR OTHERWISE WITH RESPECT TO THE MATERIALS OR OTHERWISE, AND EXPRESSLY DISCLAIMS ALL IMPLIED WARRANTIES INCLUDING, WITHOUT LIMITATION, THE WARRANTIES OF DESIGN, OF NONINFRINGEMENT, MERCHANTABILITY OR FITNESS FOR A PARTICULAR PURPOSE, OR ARISING FROM A COURSE OF DEALING, TRADE USAGE, TRADE PRACTICE, OR INDUSTRY STANDARDS.

GIGABYTE

Title
Page34: NVVDD CTR

Size Custom
Document Number GV-N3070AORUS M-8GD
Rev 1.0

Date: Tuesday, September 08, 2020

BLANK PAGE

ASSEMBLY <ASSEMBLY_DESCRIPTION>
PAGE DETAIL BLANK PAGE

ALL NVIDIA DESIGN SPECIFICATIONS, REFERENCE SPECIFICATIONS, REFERENCE BOARDS, FILES, DRAWINGS, DIAGNOSTICS, LISTS AND OTHER DOCUMENTS OR INFORMATION (TOGETHER AND SEPARATELY, 'MATERIALS') ARE BEING PROVIDED 'AS IS'. THE MATERIALS MAY CONTAIN KNOWN AND UNKNOWN VIOLATIONS OR DEVIATIONS OF INDUSTRY STANDARDS AND SPECIFICATIONS. NVIDIA MAKES NO WARRANTIES, EXPRESSED, IMPLIED, STATUTORY OR OTHERWISE WITH RESPECT TO THE MATERIALS OR OTHERWISE, AND EXPRESSLY DISCLAIMS ALL IMPLIED WARRANTIES INCLUDING, WITHOUT LIMITATION, THE WARRANTIES OF DESIGN, OF NONINFRINGEMENT, MERCHANTABILITY OR FITNESS FOR A PARTICULAR PURPOSE, OR ARISING FROM A COURSE OF DEALING, TRADE USAGE, TRADE PRACTICE, OR INDUSTRY STANDARDS.

GIGABYTE
Title BLANK
Size Custom
Document Number GV-N3070AORUS M-8GD
Rev 1.0
Date: Tuesday, July 21, 2020
Sheet 35 of 57

Page36: NVVDD PH4 & PH6

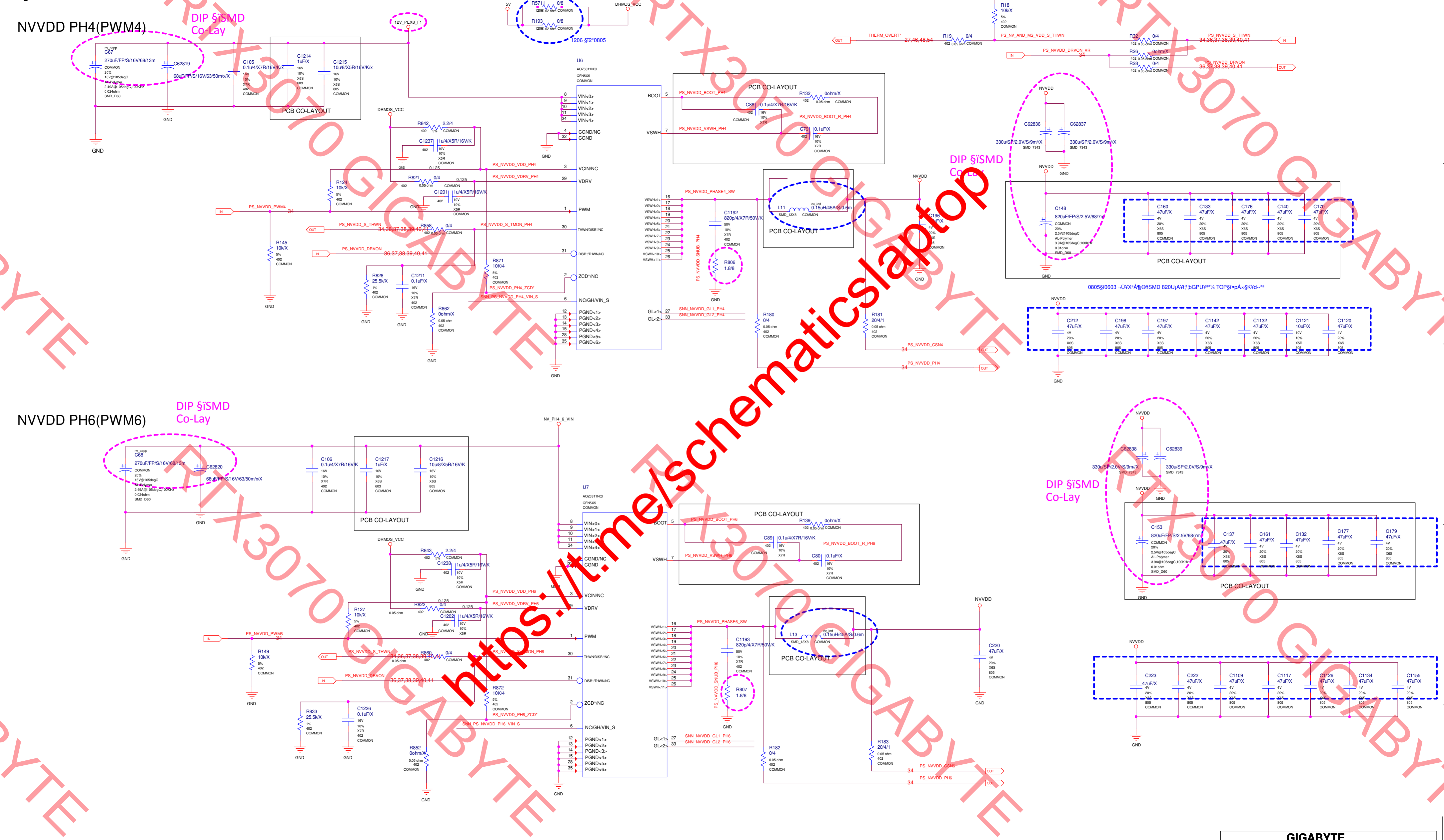
NVVDD PH4(PWM4)
DIP §ïSMD Co-Lay
C67 270uF/FP/S/16V/68/13m
C62819 68uF/FP/S/16V/63/50m/x/X
C105 0.1u/4/X7R/16V/K/x
C1214 1uF/X
C1215 10u/8/X5R/16V/K/x
PCB CO-LAYOUT
12V_PEX8_F1
5V
R5711 0/8
R193 0/8
1206 §ï2*0805
DRMOS_VCC
U6
AOZ5311NQI
QFN5X5
VIN<0>
VIN<1>
VIN<2>
VIN<3>
VIN<4>
CGND/NC
CGND
VCIN/NC
VDRV
PWM
THWN/DISB*/NC
DISB*/THWN/NC
ZCD*/NC
NC/GH/VIN_S
PGND<1>
PGND<2>
PGND<3>
PGND<4>
PGND<5>
PGND<6>
BOOT
VSWH
GL<1>
GL<2>
R842 2.2/4
C1237 1u/4/X5R/16V/K
R821 0/4
C1201 1u/4/X5R/16V/K
R124 10k/X
PS_NVVDD_PWM4
PS_NVVDD_VDD_PH4
PS_NVVDD_VDRV_PH4
PS_NVVDD_S_THWN
PS_NVVDD_S_TMON_PH4
PS_NVVDD_DRVON
PS_NVVDD_PH4_ZCD*
SNN_PS_NVVDD_PH4_VIN_S
R145 10k/X
R858 0/4
R871 10K/4
R828 25.5k/X
C1211 0.1uF/X
R862 0ohm/X
PS_NVVDD_BOOT_PH4
PS_NVVDD_BOOT_R_PH4
PS_NVVDD_VSWH_PH4
R132 0ohm/X
C88 0.1u/4/X7R/16V/K
C79 0.1uF/X
PS_NVVDD_PHASE4_SW
C1192 820p/4/X7R/50V/K
PS_NVVDD_SNUB_PH4
R806 1.8/8
L11 0.15uH/45A/S/0.6m
SNN_NVVDD_GL1_PH4
SNN_NVVDD_GL2_PH4
R180 0/4
R181 20/4/1
PS_NVVDD_CSN4
PS_NVVDD_PH4
1V8
R18 10k/X
THERM_OVERT*
27,46,48,54
R19 0/4
PS_NV_AND_MS_VDD_S_THWN
R32 0/4
PS_NVVDD_S_THWN
34,36,37,38,39,40,41
PS_NVVDD_DRVON_VR
R26 0ohm/X
R28 0/4
PS_NVVDD_DRVON
36,37,38,39,40,41
NVVDD
C62836 330u/SP/2.0V/S/9m/X
C62837 330u/SP/2.0V/S/9m/X
C148 820uF/FP/S/2.5V/68/7m
C160 47uF/X
C133 47uF/X
C176 47uF/X
C140 47uF/X
C170 47uF/X
C196 47uF/X
0805§ï0603 ¬Ù¥X³Â¶¡©ïSMD 820U¡A¥t¦³bGPU¥³¹¼ TOP§ï¤pÅ›§K¼d-¬³
C212 47uF/X
C198 47uF/X
C197 47uF/X
C1142 47uF/X
C1132 47uF/X
C1121 10uF/X
C1120 47uF/X
NVVDD PH6(PWM6)
C68 270uF/FP/S/16V/68/13m
C62820 68uF/FP/S/16V/63/50m/x/X
C106 0.1u/4/X7R/16V/K
C1217 1uF/X
C1216 10u/8/X5R/16V/K
NV_PH4_6_VIN
U7
AOZ5311NQI
R843 2.2/4
C1238 1u/4/X5R/16V/K
R822 0/4
C1202 1u/4/X5R/16V/K
R127 10k/X
PS_NVVDD_PWM6
R149 10k/X
R860 0/4
PS_NVVDD_S_TMON_PH6
R872 10K/4
PS_NVVDD_PH6_ZCD*
SNN_PS_NVVDD_PH6_VIN_S
R833 25.5k/X
C1226 0.1uF/X
R852 0ohm/X
PS_NVVDD_VDD_PH6
PS_NVVDD_VDRV_PH6
PS_NVVDD_BOOT_PH6
PS_NVVDD_BOOT_R_PH6
PS_NVVDD_VSWH_PH6
R139 0ohm/X
C89 0.1u/4/X7R/16V/K
C80 0.1uF/X
PS_NVVDD_PHASE6_SW
C1193 820p/4/X7R/50V/K
PS_NVVDD_SNUB_PH6
R807 1.8/8
L13 0.15uH/45A/S/0.6m
C220 47uF/X
SNN_NVVDD_GL1_PH6
SNN_NVVDD_GL2_PH6
R182 0/4
R183 20/4/1
PS_NVVDD_CSN6
PS_NVVDD_PH6
C62838 330u/SP/2.0V/S/9m/X
C62839 330u/SP/2.0V/S/9m/X
C153 820uF/FP/S/2.5V/68/7m
C137 47uF/X
C161 47uF/X
C132 47uF/X
C177 47uF/X
C179 47uF/X
C223 47uF/X
C222 47uF/X
C1109 47uF/X
C1117 47uF/X
C1126 47uF/X
C1134 47uF/X
C1155 47uF/X
GND
IN
OUT
A
B
C
D
E
F
G
H
1
2
3
4
5

ASSEMBLY <ASSEMBLY_DESCRIPTION>
PAGE DETAIL PS: NVVDD PH4, PH6

ALL NVIDIA DESIGN SPECIFICATIONS, REFERENCE SPECIFICATIONS, REFERENCE BOARDS, FILES, DRAWINGS, DIAGNOSTICS, LISTS AND OTHER DOCUMENTS OR INFORMATION (TOGETHER AND SEPARATELY, 'MATERIALS') ARE BEING PROVIDED 'AS IS'. THE MATERIALS MAY CONTAIN KNOWN AND UNKNOWN VIOLATIONS OR DEVIATIONS OF INDUSTRY STANDARDS AND SPECIFICATIONS. NVIDIA MAKES NO WARRANTIES, EXPRESSED, IMPLIED, STATUTORY OR OTHERWISE WITH RESPECT TO THE MATERIALS OR OTHERWISE, AND EXPRESSLY DISCLAIMS ALL IMPLIED WARRANTIES INCLUDING, WITHOUT LIMITATION, THE WARRANTIES OF DESIGN, OF NONINFRINGEMENT, MERCHANTABILITY OR FITNESS FOR A PARTICULAR PURPOSE, OR ARISING FROM A COURSE OF DEALING, TRADE USAGE, TRADE PRACTICE, OR INDUSTRY STANDARDS.

GIGABYTE

Title
Page36: NVVDD PH4 & PH6

Size	Document Number	Rev
Custom	GV-N3070AORUS M-8GD	1.0

Date: Friday, August 07, 2020 Sheet 36 of 57

Page37: NVVDD PH1 & PH3

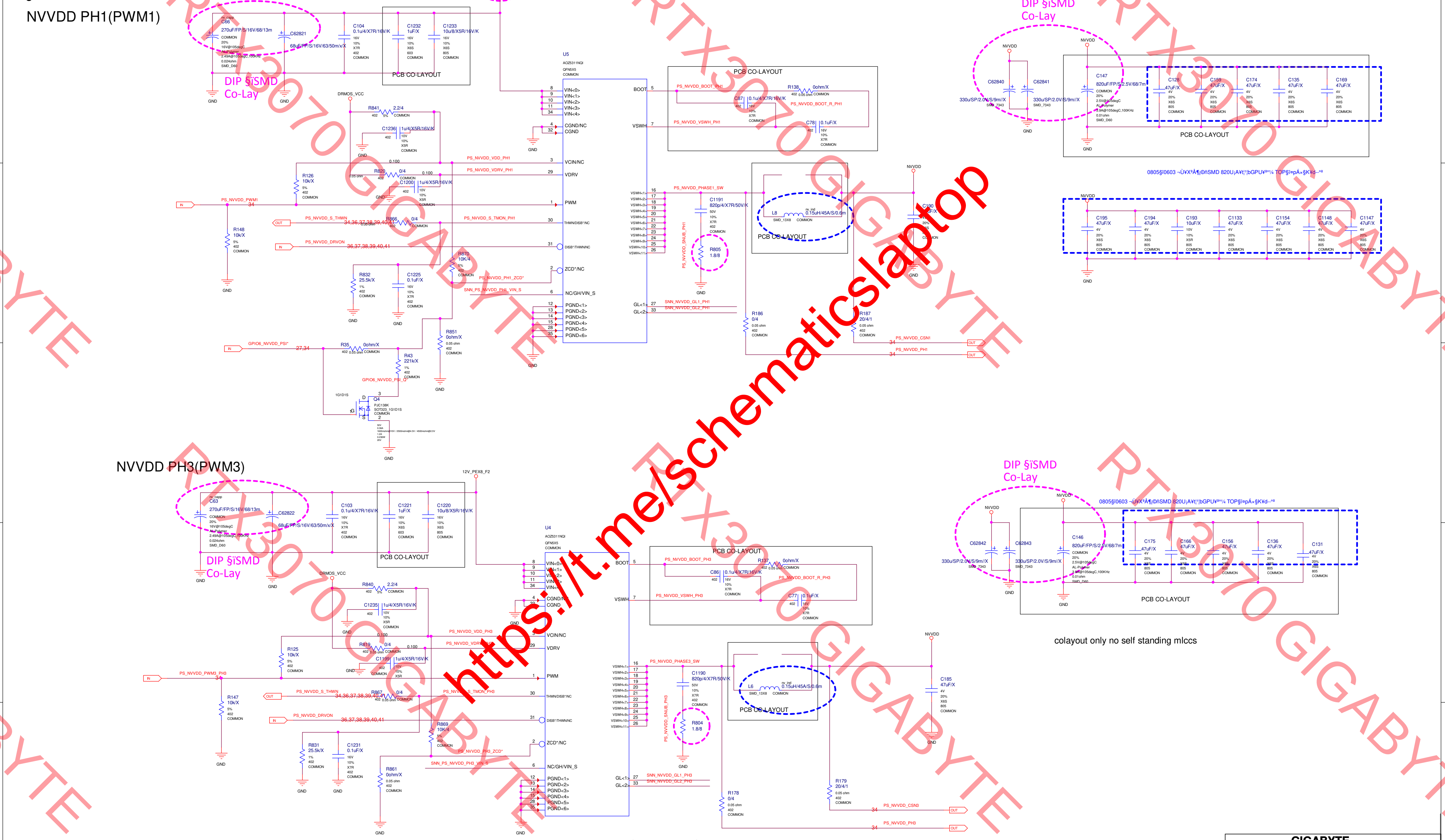
NVVDD PH1(PWM1)
12V_F
C66 270uF/FP/S/16V/68/13m
C62821 68uF/FP/S/16V/63/50m/x/X
C104 0.1u/4/X7R/16V/K
C1232 1uF/X
C1233 10u/8/X5R/16V/K
DIP §ïSMD Co-Lay
PCB CO-LAYOUT
U5 AOZ5311NQI QFN5X5 COMMON
VIN<0> VIN<1> VIN<2> VIN<3> VIN<4>
CGND/NC CGND
VCIN/NC
VDRV
PWM
THWN/DISB*/NC
DISB*/THWN/NC
ZCD*/NC
NC/GH/VIN_S
PGND<1> PGND<2> PGND<3> PGND<4> PGND<5> PGND<6>
BOOT
VSWH
GL<1> GL<2>
DRMOS_VCC
R841 2.2/4
C1236 1u/4/X5R/16V/K
R126 10k/X
R820 0/4
C1200 1u/4/X5R/16V/K
PS_NVVDD_VDD_PH1
PS_NVVDD_VDRV_PH1
PS_NVVDD_PWM1
R148 10k/X
PS_NVVDD_S_THWN
R866 0/4
PS_NVVDD_S_TMON_PH1
PS_NVVDD_DRVON
R870 10K/4
R832 25.5k/X
C1225 0.1uF/X
PS_NVVDD_PH1_ZCD*
SNN_PS_NVVDD_PH1_VIN_S
R851 0ohm/X
GPIO6_NVVDD_PSI*
R35 0ohm/X
R43 221k/X
GPIO6_NVVDD_PSI_G
Q4 PJC138K SOT323_1G1D1S
PS_NVVDD_BOOT_PH1
R138 0ohm/X
C67 0.1u/4/X7R/16V/K
PS_NVVDD_BOOT_R_PH1
PS_NVVDD_VSWH_PH1
C78 0.1uF/X
PS_NVVDD_PHASE1_SW
C1191 820p/4/X7R/50V/K
L8 0.15uH/45A/S/0.6m
R805 1.8/8
PS_NVVDD_SNUB_PH1
SNN_NVVDD_GL1_PH1
SNN_NVVDD_GL2_PH1
R186 0/4
R187 20/4/1
PS_NVVDD_CSN1
PS_NVVDD_PH1
C190 47uF/X
NVVDD
C62840 330u/SP/2.0V/S/9m/X
C62841 330u/SP/2.0V/S/9m/X
C147 820uF/FP/S/2.5V/68/7m
C128 47uF/X
C159 47uF/X
C174 47uF/X
C135 47uF/X
C169 47uF/X
0805§ï0603 ¬Ú¥X³Å¶¡©ñSMD 820U¡A¥Ì¦¹bGPU¥ª¹¼ TOP§ï¤pÁ×§K¥d¨
C195 47uF/X
C194 47uF/X
C193 10uF/X
C1133 47uF/X
C1154 47uF/X
C1148 47uF/X
C1147 47uF/X
NVVDD PH3(PWM3)
12V_PEX8_F2
C63 270uF/FP/S/16V/68/13m
C62822 68uF/FP/S/16V/63/50m/x/X
C103 0.1u/4/X7R/16V/K
C1221 1uF/X
C1220 10u/8/X5R/16V/K
U4 AOZ5311NQI QFN5X5 COMMON
R840 2.2/4
C1235 1u/4/X5R/16V/K
R125 10k/X
R819 0/4
C1199 1u/4/X5R/16V/K
PS_NVVDD_VDD_PH3
PS_NVVDD_VDRV_PH3
PS_NVVDD_PWM3_PH3
R147 10k/X
R867 0/4
PS_NVVDD_S_TMON_PH3
R869 10K/4
R831 25.5k/X
C1231 0.1uF/X
PS_NVVDD_PH3_ZCD*
SNN_PS_NVVDD_PH3_VIN_S
R861 0ohm/X
PS_NVVDD_BOOT_PH3
R137 0ohm/X
C86 0.1u/4/X7R/16V/K
PS_NVVDD_BOOT_R_PH3
PS_NVVDD_VSWH_PH3
C77 0.1uF/X
PS_NVVDD_PHASE3_SW
C1190 820p/4/X7R/50V/K
L6 0.15uH/45A/S/0.6m
R804 1.8/8
PS_NVVDD_SNUB_PH3
SNN_NVVDD_GL1_PH3
SNN_NVVDD_GL2_PH3
R178 0/4
R179 20/4/1
PS_NVVDD_CSN3
PS_NVVDD_PH3
C185 47uF/X
C62842 330u/SP/2.0V/S/9m/X
C62843 330u/SP/2.0V/S/9m/X
C146 820uF/FP/S/2.5V/68/7m
C175 47uF/X
C166 47uF/X
C156 47uF/X
C136 47uF/X
C131 47uF/X
colayout only no self standing mlccs
GND

ASSEMBLY
PAGE DETAIL

<ASSEMBLY_DESCRIPTION>
PS: NVVDD PH1, PH3

ALL NVIDIA DESIGN SPECIFICATIONS, REFERENCE SPECIFICATIONS, REFERENCE BOARDS, FILES, DRAWINGS, DIAGNOSTICS, LISTS AND OTHER DOCUMENTS OR INFORMATION (TOGETHER AND SEPARATELY, 'MATERIALS') ARE BEING PROVIDED 'AS IS'. THE MATERIALS MAY CONTAIN KNOWN AND UNKNOWN VIOLATIONS OR DEVIATIONS OF INDUSTRY STANDARDS AND SPECIFICATIONS. NVIDIA MAKES NO WARRANTIES, EXPRESSED, IMPLIED, STATUTORY OR OTHERWISE WITH RESPECT TO THE MATERIALS OR OTHERWISE, AND EXPRESSLY DISCLAIMS ALL IMPLIED WARRANTIES INCLUDING, WITHOUT LIMITATION, THE WARRANTIES OF DESIGN, OF NONINFRINGEMENT, MERCHANTABILITY OR FITNESS FOR A PARTICULAR PURPOSE, OR ARISING FROM A COURSE OF DEALING, TRADE USAGE, TRADE PRACTICE, OR INDUSTRY STANDARDS.

GIGABYTE

Title
Page37: NVVDD PH1 & PH3

Size	Document Number	Rev
Custom	GV-N3070AORUS M-8GD	1.0

Date: Thursday, August 06, 2020 Sheet 37 of 57

Page38: NVVDD PH2 & PH5

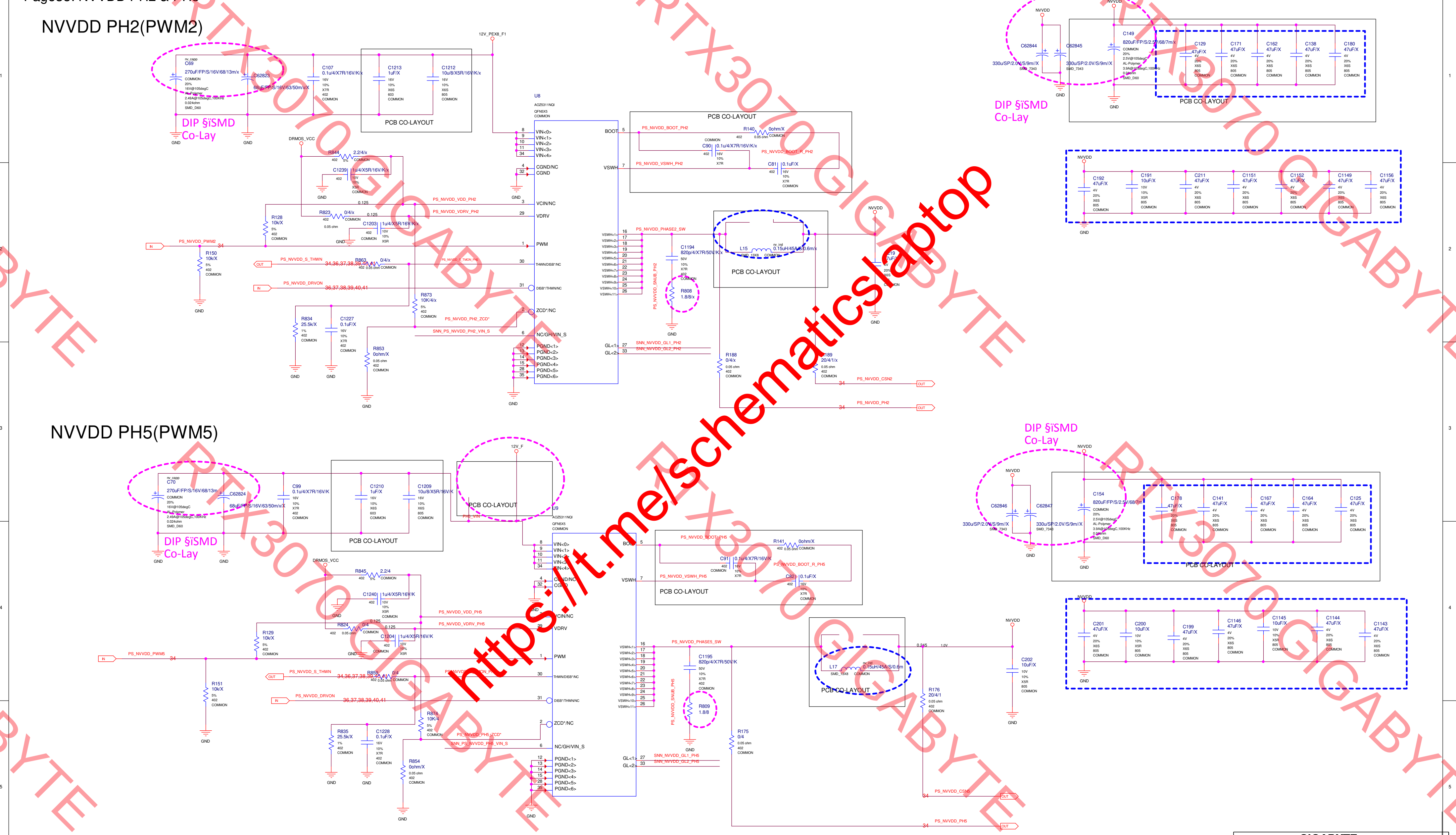

NVVDD PH2(PWM2)
NVVDD PH5(PWM5)
U8
AOZ5311NQI
QFN5X5
U9
C69 270uF/FP/S/16V/68/13m/x
C62823 68uF/FP/S/16V/63/50m/x/X
C107 0.1u/4/X7R/16V/K/x
C1213 1uF/X
C1212 10u/8/X5R/16V/K/x
C70 270uF/FP/S/16V/68/13m
C62824 68uF/FP/S/16V/63/50m/x/X
C99 0.1u/4/X7R/16V/K
C1210 1uF/X
C1209 10u/8/X5R/16V/K
PCB CO-LAYOUT
DIP §ïSMD Co-Lay
12V_PEX8_F1
12V_F
DRMOS_VCC
VIN<0>
VIN<1>
VIN<2>
VIN<3>
VIN<4>
CGND/NC
CGND
VCIN/NC
VDRV
PWM
THWN/DISB*/NC
DISB*/THWN/NC
ZCD*/NC
NC/GH/VIN_S
PGND<1>
PGND<2>
PGND<3>
PGND<4>
PGND<5>
PGND<6>
BOOT
VSWH
GL<1>
GL<2>
PS_NVVDD_PWM2
PS_NVVDD_S_THWN
PS_NVVDD_DRVON
PS_NVVDD_VDD_PH2
PS_NVVDD_VDRV_PH2
PS_NVVDD_BOOT_PH2
PS_NVVDD_BOOT_R_PH2
PS_NVVDD_VSWH_PH2
PS_NVVDD_PHASE2_SW
PS_NVVDD_PH2_ZCD*
SNN_PS_NVVDD_PH2_VIN_S
SNN_NVVDD_GL1_PH2
SNN_NVVDD_GL2_PH2
PS_NVVDD_SNUB_PH2
PS_NVVDD_CSN2
PS_NVVDD_PH2
PS_NVVDD_PWM5
PS_NVVDD_VDD_PH5
PS_NVVDD_VDRV_PH5
PS_NVVDD_BOOT_PH5
PS_NVVDD_BOOT_R_PH5
PS_NVVDD_VSWH_PH5
PS_NVVDD_PHASE5_SW
PS_NVVDD_PH5_ZCD*
SNN_PS_NVVDD_PH5_VIN_S
SNN_NVVDD_GL1_PH5
SNN_NVVDD_GL2_PH5
PS_NVVDD_SNUB_PH5
PS_NVVDD_CSN5
PS_NVVDD_PH5
34,36,37,38,39,40,41
36,37,38,39,40,41
R844 2.2/4/x
C1239 1u/4/X5R/16V/K/x
R823 0/4/x
C1203 1u/4/X5R/16V/K/x
R128 10k/X
R150 10k/X
R863 0/4/x
R873 10K/4/x
R834 25.5k/X
C1227 0.1uF/X
R853 0ohm/X
R140 0ohm/X
C90 0.1u/4/X7R/16V/K/x
C81 0.1uF/X
C1194 820p/4/X7R/50V/K/x
R808 1.8/8/x
L15 0.15uH/45A/0.6m/x
C119 47uF/X
R188 0/4/x
R189 20/4/1/x
R845 2.2/4
C1240 1u/4/X5R/16V/K
R824 0/4
C1204 1u/4/X5R/16V/K
R129 10k/X
R151 10k/X
R859 0/4
R874 10K/4
R835 25.5k/X
C1228 0.1uF/X
R854 0ohm/X
R141 0ohm/X
C91 0.1u/4/X7R/16V/K
C82 0.1uF/X
C1195 820p/4/X7R/50V/K
R809 1.8/8
L17 0.15uH/45A/0.6m
R176 20/4/1
R175 0/4
C202 10uF/X
NVVDD
GND
C62844 330u/SP/2.0V/S/9m/X
C62845 330u/SP/2.0V/S/9m/X
C149 820uF/FP/S/2.5V/68/7m/x
C129 47uF/X
C171 47uF/X
C162 47uF/X
C138 47uF/X
C180 47uF/X
C192 47uF/X
C191 10uF/X
C211 47uF/X
C1151 47uF/X
C1152 47uF/X
C1149 47uF/X
C1156 47uF/X
C62846 330u/SP/2.0V/S/9m/X
C62847 330u/SP/2.0V/S/9m/X
C154 820uF/FP/S/2.5V/68/7m
C178 47uF/X
C141 47uF/X
C167 47uF/X
C164 47uF/X
C125 47uF/X
C201 47uF/X
C200 10uF/X
C199 47uF/X
C1146 47uF/X
C1145 10uF/X
C1144 47uF/X
C1143 47uF/X
IN
OUT

ASSEMBLY <ASSEMBLY_DESCRIPTION>
PAGE DETAIL PS: NVVDD PH2, PH5

ALL NVIDIA DESIGN SPECIFICATIONS, REFERENCE SPECIFICATIONS, REFERENCE BOARDS, FILES, DRAWINGS, DIAGNOSTICS, LISTS AND OTHER DOCUMENTS OR INFORMATION (TOGETHER AND SEPARATELY, 'MATERIALS') ARE BEING PROVIDED 'AS IS'. THE MATERIALS MAY CONTAIN KNOWN AND UNKNOWN VIOLATIONS OR DEVIATIONS OF INDUSTRY STANDARDS AND SPECIFICATIONS. NVIDIA MAKES NO WARRANTIES, EXPRESSED, IMPLIED, STATUTORY OR OTHERWISE WITH RESPECT TO THE MATERIALS OR OTHERWISE, AND EXPRESSLY DISCLAIMS ALL IMPLIED WARRANTIES INCLUDING, WITHOUT LIMITATION, THE WARRANTIES OF DESIGN, OF NONINFRINGEMENT, MERCHANTABILITY OR FITNESS FOR A PARTICULAR PURPOSE, OR ARISING FROM A COURSE OF DEALING, TRADE USAGE, TRADE PRACTICE, OR INDUSTRY STANDARDS.

GIGABYTE			
Title	Page38: NVVDD PH2 & PH5		
Size Custom	Document Number GV-N3070AORUS M-8GD		Rev 1.0
Date: Friday, August 07, 2020		Sheet 38 of 57	

Page39: NVVDD PH2b

NVVDD PH9 (PWM3) change to PH2b (PWM2)

NVVDD PH6b (PWM6b)

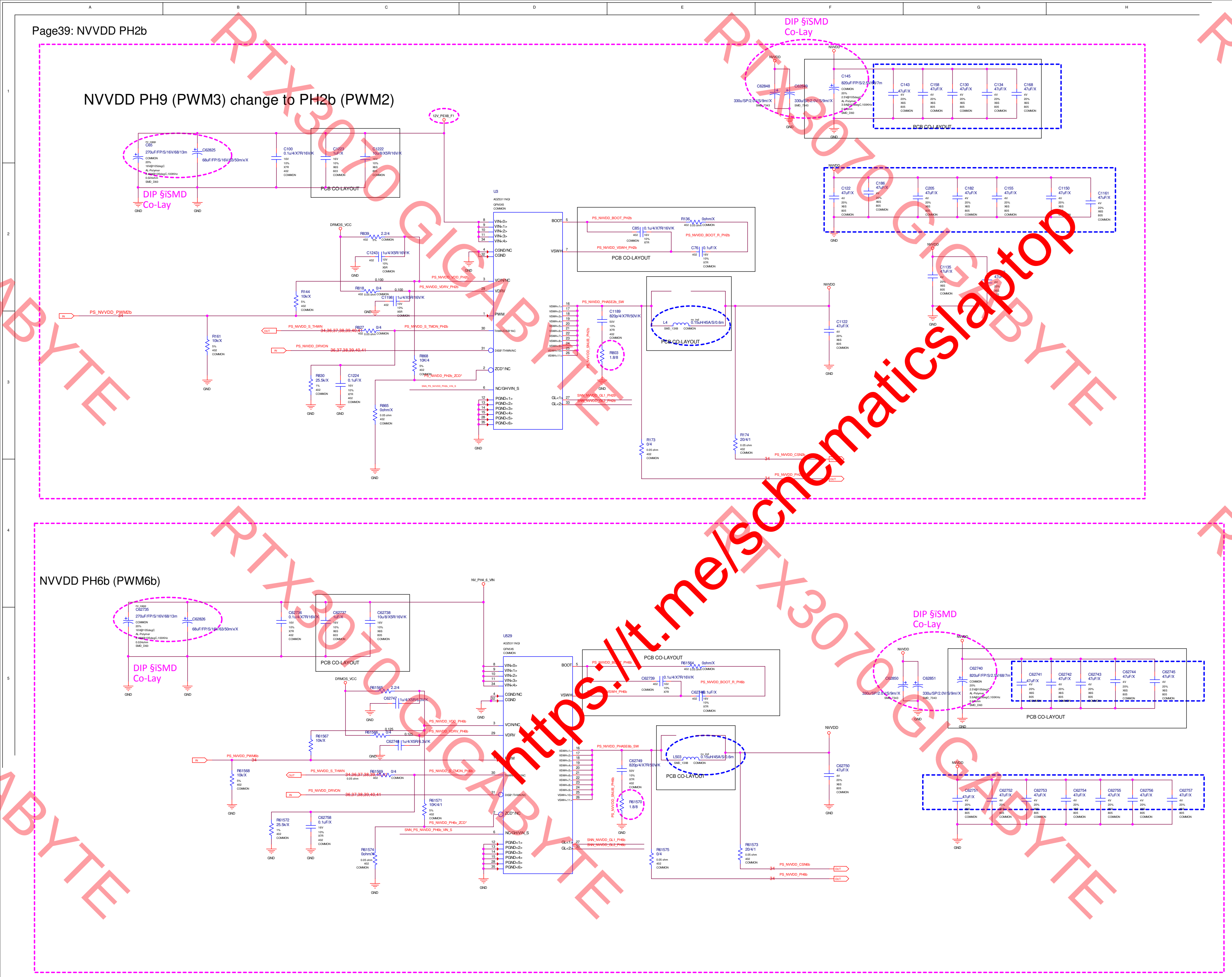
A
B
C
D
E
F
G
H
1
2
3
4
5
12V_PEX8_F1
nv_capp
C65
270uF/FP/S/16V/68/13m
COMMON
20%
16V@105degC
AL-Polymer
2.49A@105degC,100KHz
0.024ohm
SMD_D60
C62825
68uF/FP/S/16V/63/50m/x/X
DIP §ïSMD
Co-Lay
GND
C100
0.1u/4/X7R/16V/K
16V
10%
X7R
402
COMMON
C1223
1uF/X
16V
10%
X6S
603
COMMON
C1222
10u/8/X5R/16V/K
16V
10%
X6S
805
COMMON
PCB CO-LAYOUT
U3
AOZ5311NQI
QFN5X5
COMMON
VIN<0>
VIN<1>
VIN<2>
VIN<3>
VIN<4>
CGND/NC
CGND
VCIN/NC
VDRV
PWM
THWN/DISB*/NC
DISB*/THWN/NC
ZCD*/NC
NC/GH/VIN_S
PGND<1>
PGND<2>
PGND<3>
PGND<4>
PGND<5>
PGND<6>
BOOT
VSWH
VSWH<1>
VSWH<2>
VSWH<3>
VSWH<4>
VSWH<5>
VSWH<6>
VSWH<7>
VSWH<8>
VSWH<9>
VSWH<10>
VSWH<11>
GL<1>
GL<2>
DRMOS_VCC
R839
2.2/4
402
5%
C1243
1u/4/X5R/16V/K
10V
X5R
0.100
PS_NVVDD_VDD_PH2b
R818
0/4
0.05 ohm
PS_NVVDD_VDRV_PH2b
C1198
1u/4/X5R/16V/K
R144
10k/X
IN
PS_NVVDD_PWM2b
34
R161
10k/X
OUT
PS_NVVDD_S_THWN
34,36,37,38,39,40,41
R827
0/4
PS_NVVDD_S_TMON_PH2b
PS_NVVDD_DRVON
36,37,38,39,40,41
R868
10K/4
PS_NVVDD_PH2b_ZCD*
SNN_PS_NVVDD_PH2b_VIN_S
R830
25.5k/X
1%
C1224
0.1uF/X
R865
0ohm/X
PS_NVVDD_BOOT_PH2b
R136
0ohm/X
C85
0.1u/4/X7R/16V/K
PS_NVVDD_BOOT_R_PH2b
PS_NVVDD_VSWH_PH2b
C76
0.1uF/X
PS_NVVDD_PHASE2b_SW
C1189
820p/4/X7R/50V/K
50V
PS_NVVDD_SNUB_PH2b
R803
1.8/8
SNN_NVVDD_GL1_PH2b
SNN_NVVDD_GL2_PH2b
L4
nv_ind
0.15uH/45A/S/0.6m
SMD_13X8
NVVDD
C1122
47uF/X
4V
20%
R173
0/4
R174
20/4/1
PS_NVVDD_CSN2b
PS_NVVDD_PH2b
C62848
330u/SP/2.0V/S/9m/X
SMD_7343
C62849
330u/SP/2.0V/S/9m/X
C145
820uF/FP/S/2.5V/68/7m
2.5V@105degC
3.9A@105degC,100KHz
0.01ohm
C143
47uF/X
C158
47uF/X
C130
47uF/X
C134
47uF/X
C168
47uF/X
C122
47uF/X
C186
47uF/X
C205
47uF/X
C182
47uF/X
C155
47uF/X
C1150
47uF/X
C1161
47uF/X
C1135
47uF/X
NV_PH4_6_VIN
C62735
270uF/FP/S/16V/68/13m
C62826
68uF/FP/S/16V/63/50m/x/X
C62736
0.1u/4/X7R/16V/K
C62737
1uF/X
C62738
10u/8/X5R/16V/K
U529
R61565
2.2/4
C62747
1u/4/X5R/6.3V/K
0.125
PS_NVVDD_VDD_PH6b
R61566
0/4
PS_NVVDD_VDRV_PH6b
C62748
1u/4/X5R/6.3V/K
R61567
10k/X
PS_NVVDD_PWM6b
R61568
10k/X
R61569
0/4
PS_NVVDD_S_TMON_PH6b
R61571
10K/4/1
PS_NVVDD_PH6v_ZCD*
SNN_PS_NVVDD_PH6b_VIN_S
R61572
25.5k/X
C62758
0.1uF/X
R61574
0ohm/X
PS_NVVDD_BOOT_PH6b
R61564
0ohm/X
C62739
0.1u/4/X7R/16V/K
PS_NVVDD_BOOT_R_PH6b
PS_NVVDD_VSWH_PH6b
C62746
0.1uF/X
PS_NVVDD_PHASE6b_SW
C62749
820p/4/X7R/50V/K
PS_NVVDD_SNUB_PH6b
R61570
1.8/8
SNN_NVVDD_GL1_PH6b
SNN_NVVDD_GL2_PH6b
L503
0.15uH/45A/S/0.6m
C62750
47uF/X
R61575
0/4
R61573
20/4/1
PS_NVVDD_CSN6b
PS_NVVDD_PH6b
C62850
330u/SP/2.0V/S/9m/X
C62851
330u/SP/2.0V/S/9m/X
C62740
820uF/FP/S/2.5V/68/7m
C62741
47uF/X
C62742
47uF/X
C62743
47uF/X
C62744
47uF/X
C62745
47uF/X
C62751
47uF/X
C62752
47uF/X
C62753
47uF/X
C62754
47uF/X
C62755
47uF/X
C62756
47uF/X
C62757
47uF/X

GIGABYTE

Title
Page39: NVVDD PH9

Size D
Document Number
GV-N3070AORUS M-8GD
Rev 1.0

Date: Thursday, August 06, 2020
Sheet 39 of 57

Page40: NVVDD PH7

NVVDD PH7(PWM7)

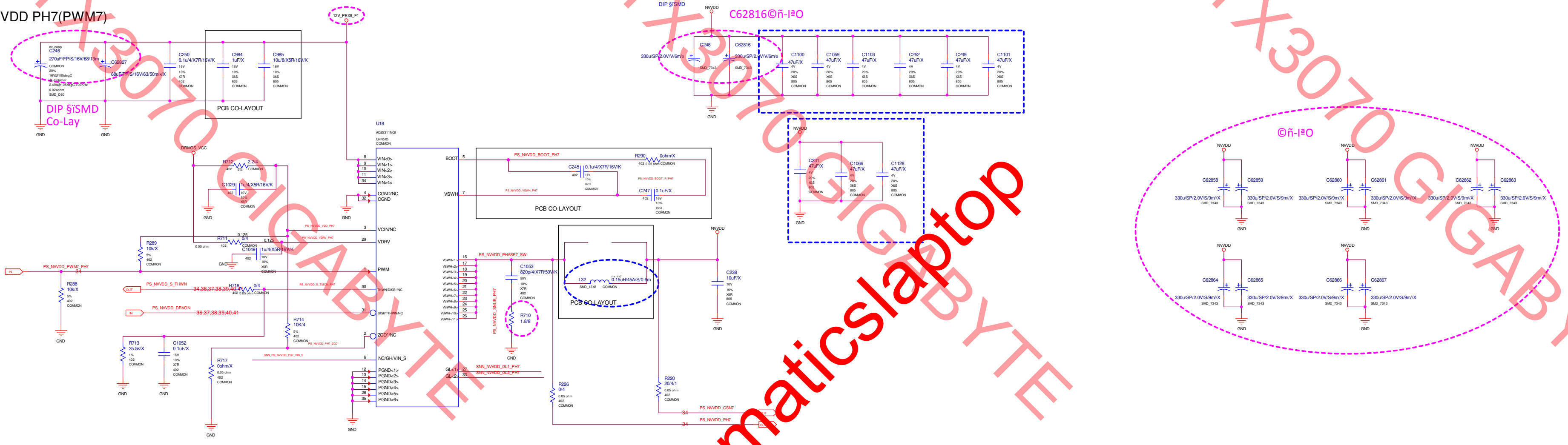
12V_PEX8_F1
nv_capp
C246
270uF/FP/S/16V/68/13m
COMMON
20%
16V@105degC
AL-Polymer
2.49A@105degC,100KHz
0.024ohm
SMD_D60
C62827
68uF/FP/S/16V/63/50m/x/X
C250
0.1u/4/X7R/16V/K
16V 10% X7R 402 COMMON
C984
1uF/X
16V 10% X6S 603 COMMON
C985
10u/8/X5R/16V/K
16V 10% X6S 805 COMMON
PCB CO-LAYOUT
DIP §ïSMD
Co-Lay
GND
U18
AOZ5311NQI
QFN5X5
COMMON
DRMOS_VCC
R712 2.2/4 402 5% COMMON
C1029 1u/4/X5R/16V/K 402 10V 10% X5R COMMON
PS_NVVDD_VDD_PH7
PS_NVVDD_VDRV_PH7
0.125
R711 0/4 402 0.05 ohm COMMON
C1049 1u/4/X5R/16V/K 402 10V 10% X5R COMMON
R289 10k/X 5% 402 COMMON
IN
PS_NVVDD_PWM7_PH7
34
R288 10k/X 5% 402 COMMON
OUT
PS_NVVDD_S_THWN
34,36,37,38,39,40,41
R718 0/4 402 0.05 ohm COMMON
PS_NVVDD_S_TMON_PH7
PS_NVVDD_DRVON
36,37,38,39,40,41
R714 10K/4 5% 402 COMMON
PS_NVVDD_PH7_ZCD*
R713 25.5k/X 1% 402 COMMON
C1052 0.1uF/X 16V 10% X7R 402 COMMON
R717 0ohm/X 0.05 ohm 402 COMMON
SNN_PS_NVVDD_PH7_VIN_S
8 VIN<0>
9 VIN<1>
10 VIN<2>
11 VIN<3>
34 VIN<4>
4 CGND/NC
32 CGND
3 VCIN/NC
29 VDRV
1 PWM
30 THWN/DISB*/NC
31 DISB*/THWN/NC
2 ZCD*/NC
6 NC/GH/VIN_S
12 PGND<1>
13 PGND<2>
14 PGND<3>
15 PGND<4>
28 PGND<5>
35 PGND<6>
BOOT 5
VSWH 7
VSWH<1> 16
VSWH<2> 17
VSWH<3> 18
VSWH<4> 19
VSWH<5> 20
VSWH<6> 21
VSWH<7> 22
VSWH<8> 23
VSWH<9> 24
VSWH<10> 25
VSWH<11> 26
GL<1> 27
GL<2> 33
PS_NVVDD_BOOT_PH7
R290 0ohm/X 402 0.05 ohm COMMON
C245 0.1u/4/X7R/16V/K 402 16V 10% X7R COMMON
PS_NVVDD_BOOT_R_PH7
PS_NVVDD_VSWH_PH7
C247 0.1uF/X 402 16V 10% X7R COMMON
PS_NVVDD_PHASE7_SW
C1053 820p/4/X7R/50V/K 50V 10% X7R 402 COMMON
PS_NVVDD_SNUB_PH7
R710 1.8/8
L32 nv_ind 0.15uH/45A/S/0.6m SMD_13X8 COMMON
NVVDD
C238 10uF/X 10V 10% X5R 805 COMMON
SNN_NVVDD_GL1_PH7
SNN_NVVDD_GL2_PH7
R226 0/4 0.05 ohm 402 COMMON
R220 20/4/1 0.05 ohm 402 COMMON
34 PS_NVVDD_CSN7 OUT
34 PS_NVVDD_PH7 OUT
DIP §ïSMD
C62816©ñ-IªO
C248 330u/SP/2.0V/V/6m/x SMD_7343
C62816 330u/SP/2.0V/V/6m/x SMD_7343
C1100 47uF/X 4V 20% X6S 805 COMMON
C1059 47uF/X 4V 20% X6S 805 COMMON
C1103 47uF/X 4V 20% X6S 805 COMMON
C252 47uF/X 4V 20% X6S 805 COMMON
C249 47uF/X 4V 20% X6S 805 COMMON
C1101 47uF/X 4V 20% X6S 805 COMMON
C231 47uF/X 4V 20% X6S 805 COMMON
C1066 47uF/X 4V 20% X6S 805 COMMON
C1128 47uF/X 4V 20% X6S 805 COMMON
©ñ-IªO
C62858 330u/SP/2.0V/S/9m//X SMD_7343
C62859 330u/SP/2.0V/S/9m//X SMD_7343
C62860 330u/SP/2.0V/S/9m//X SMD_7343
C62861 330u/SP/2.0V/S/9m//X SMD_7343
C62862 330u/SP/2.0V/S/9m//X SMD_7343
C62863 330u/SP/2.0V/S/9m//X SMD_7343
C62864 330u/SP/2.0V/S/9m//X SMD_7343
C62865 330u/SP/2.0V/S/9m//X SMD_7343
C62866 330u/SP/2.0V/S/9m//X SMD_7343
C62867 330u/SP/2.0V/S/9m//X SMD_7343

NVVDD PH8b (PWM8b)

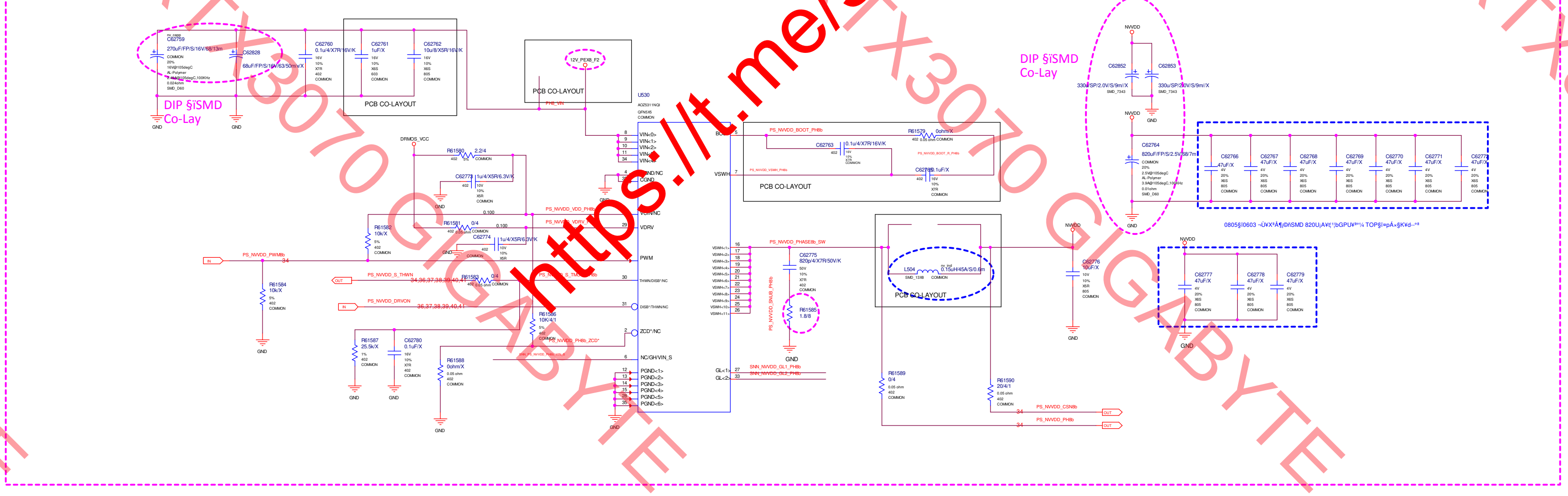
nv_capp
C62759
270uF/FP/S/16V/68/13m
COMMON
20%
16V@105degC
AL-Polymer
2.49A@105degC,100KHz
0.024ohm
SMD_D60
C62828
68uF/FP/S/16V/63/50m/x/X
C62760 0.1u/4/X7R/16V/K 16V 10% X7R 402 COMMON
C62761 1uF/X 16V 10% X6S 603 COMMON
C62762 10u/8/X5R/16V/K 16V 10% X6S 805 COMMON
PCB CO-LAYOUT
DIP §ïSMD
Co-Lay
GND
12V_PEX8_F2
PH8_VIN
U530
AOZ5311NQI
QFN5X5
COMMON
DRMOS_VCC
R61580 2.2/4 402 5% COMMON
C62773 1u/4/X5R/6.3V/K 402 10V 10% X5R COMMON
0.100
PS_NVVDD_VDD_PH8b
PS_NVVDD_VDRV_PH8b
R61581 0/4 402 0.05 ohm COMMON
C62774 1u/4/X5R/6.3V/K 402 10V 10% X5R
R61582 10k/X 5% 402 COMMON
IN
PS_NVVDD_PWM8b
34
R61584 10k/X 5% 402 COMMON
OUT
PS_NVVDD_S_THWN
34,36,37,38,39,40,41
R61583 0/4 402 0.05 ohm COMMON
PS_NVVDD_S_TMON_PH8b
PS_NVVDD_DRVON
36,37,38,39,40,41
R61586 10K/4/1 5% 402 COMMON
PS_NVVDD_PH8b_ZCD*
R61587 25.5k/X 1% 402 COMMON
C62780 0.1uF/X 16V 10% X7R 402 COMMON
R61588 0ohm/X 0.05 ohm 402 COMMON
SNN_PS_NVVDD_PH8b_VIN_S
8 VIN<0>
9 VIN<1>
10 VIN<2>
11 VIN<3>
34 VIN<4>
4 CGND/NC
32 CGND
3 VCIN/NC
29 VDRV
1 PWM
30 THWN/DISB*/NC
31 DISB*/THWN/NC
2 ZCD*/NC
6 NC/GH/VIN_S
12 PGND<1>
13 PGND<2>
14 PGND<3>
15 PGND<4>
28 PGND<5>
35 PGND<6>
BOOT 5
VSWH 7
VSWH<1> 16
VSWH<2> 17
VSWH<3> 18
VSWH<4> 19
VSWH<5> 20
VSWH<6> 21
VSWH<7> 22
VSWH<8> 23
VSWH<9> 24
VSWH<10> 25
VSWH<11> 26
GL<1> 27
GL<2> 33
PS_NVVDD_BOOT_PH8b
R61579 0ohm/X 402 0.05 ohm COMMON
C62763 0.1u/4/X7R/16V/K 402 16V 10% X7R COMMON
PS_NVVDD_BOOT_R_PH8b
PS_NVVDD_VSWH_PH8b
C62765 0.1uF/X 402 16V 10% X7R COMMON
PS_NVVDD_PHASE8b_SW
C62775 820p/4/X7R/50V/K 50V 10% X7R 402 COMMON
PS_NVVDD_SNUB_PH8b
R61585 1.8/8
L504 nv_ind 0.15uH/45A/S/0.6m SMD_13X8 COMMON
NVVDD
C62776 10uF/X 10V 10% X5R 805 COMMON
SNN_NVVDD_GL1_PH8b
SNN_NVVDD_GL2_PH8b
R61589 0/4 0.05 ohm 402 COMMON
R61590 20/4/1 0.05 ohm 402 COMMON
34 PS_NVVDD_CSN8b OUT
34 PS_NVVDD_PH8b OUT
DIP §ïSMD
Co-Lay
C62852 330u/SP/2.0V/S/9m//X SMD_7343
C62853 330u/SP/2.0V/S/9m//X SMD_7343
C62764 820uF/FP/S/2.5V/68/7m COMMON 20% 2.5V@105degC AL-Polymer 3.9A@105degC,100KHz 0.01ohm SMD_D60
C62766 47uF/X 4V 20% X6S 805 COMMON
C62767 47uF/X 4V 20% X6S 805 COMMON
C62768 47uF/X 4V 20% X6S 805 COMMON
C62769 47uF/X 4V 20% X6S 805 COMMON
C62770 47uF/X 4V 20% X6S 805 COMMON
C62771 47uF/X 4V 20% X6S 805 COMMON
C62772 47uF/X 4V 20% X6S 805 COMMON
0805§ï0603 ¬Ù¥XªÅ¶¡©ñSMD 820U¡A¥t¦¹¦bGPU¥ª¤¼ TOP§ï¤pÁ×§K¥d--ºª
C62777 47uF/X 4V 20% X6S 805 COMMON
C62778 47uF/X 4V 20% X6S 805 COMMON
C62779 47uF/X 4V 20% X6S 805 COMMON

GIGABYTE

Title
Page40: NVVDD PH7

Size	Document Number	Rev
D	GV-N3070AORUS M-8GD	1.0

Date: Friday, August 07, 2020 Sheet 40 of 57

Page41: NVVDD PH4b & 8

NVVDD PH10(PWM7) change to PH4b (PWM4)

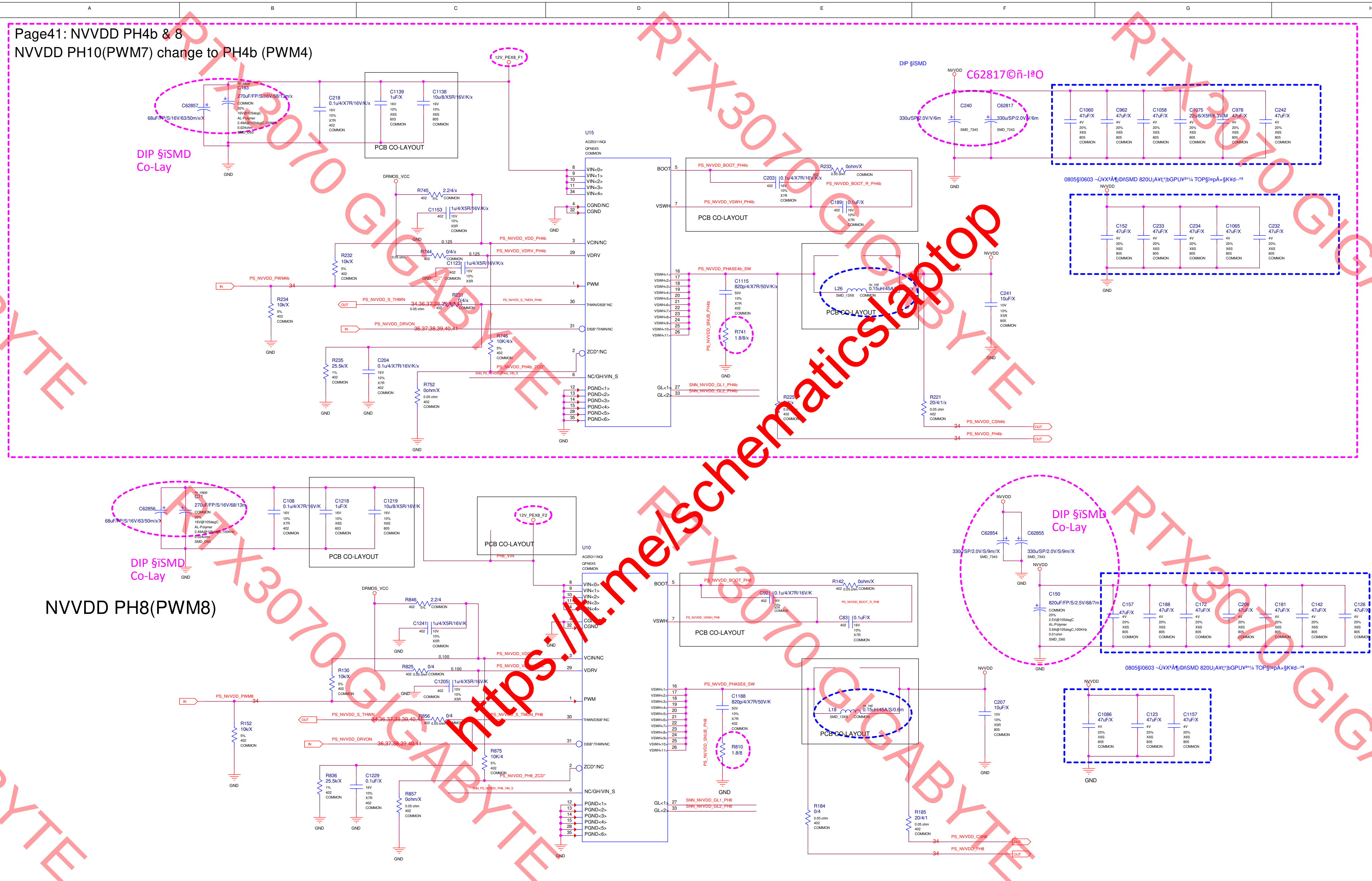
12V_PEX8_F1
C62857
68uF/FP/S/16V/63/50m/x/X
C163
270uF/FP/S/16V/68/13m/x
C218
0.1u/4/X7R/16V/K/x
C1139
1uF/X
C1138
10u/8/X5R/16V/K/x
PCB CO-LAYOUT
DIP §ïSMD
Co-Lay
GND
U15
AOZ5311NQI
QFN5X5
COMMON
DRMOS_VCC
R745
2.2/4/x
C1153
1u/4/X5R/16V/K/x
R232
10k/X
R744
0/4/x
C1123
1u/4/X5R/16V/K/x
PS_NVVDD_VDD_PH4b
PS_NVVDD_VDRV_PH4b
PS_NVVDD_PWM4b
R234
10k/X
PS_NVVDD_S_THWN
R231
0/4/x
PS_NVVDD_DRVON
36,37,38,39,40,41
R746
10K/4/x
R235
25.5k/X
C204
0.1u/4/X7R/16V/K/x
R752
0ohm/X
PS_NVVDD_PH4b_ZCD*
VIN<0>
VIN<1>
VIN<2>
VIN<3>
VIN<4>
CGND/NC
CGND
VCIN/NC
VDRV
PWM
THWN/DISB*/NC
DISB*/THWN/NC
ZCD*/NC
NC/GH/VIN_S
PGND<1>
PGND<2>
PGND<3>
PGND<4>
PGND<5>
PGND<6>
BOOT
VSWH
GL<1>
GL<2>
PS_NVVDD_BOOT_PH4b
R233
0ohm/X
C203
0.1u/4/X7R/16V/K/x
PS_NVVDD_BOOT_R_PH4b
PS_NVVDD_VSWH_PH4b
C189
0.1uF/X
PS_NVVDD_PHASE4b_SW
C1115
820p/4/X7R/50V/K/x
PS_NVVDD_SNUB_PH4b
R741
1.8/8/x
L26
0.15uH/45A
SNN_NVVDD_GL1_PH4b
SNN_NVVDD_GL2_PH4b
R225
NVVDD
C241
10uF/X
R221
20/4/1/x
PS_NVVDD_CSN4b
PS_NVVDD_PH4b
OUT
IN
DIP §ïSMD
C62817©ñ-Iº0
C240
C62817
330u/SP/2.0V/V/6m
C1060
47uF/X
C962
47uF/X
C1058
47uF/X
C1075
22u/6/X5R/6.3V/M
C978
47uF/X
C242
47uF/X
0805§î0603 ~Ù¥X³Å¶¡©ñSMD 820U¡A¥t¦¹þGPU¥ª¼ TOP§ï¤pÅ×§K¥d-ºª
C152
47uF/X
C233
47uF/X
C234
47uF/X
C1065
47uF/X
C232
47uF/X
C62856
68uF/FP/S/16V/63/50m/x/X
G71
270uF/FP/S/16V/68/13m
C108
0.1u/4/X7R/16V/K
C1218
1uF/X
C1219
10u/8/X5R/16V/K
12V_PEX8_F2
PH8_VIN
U10
AOZ5311NQI
QFN5X5
COMMON
R846
2.2/4
C1241
1u/4/X5R/16V/K
R130
10k/X
R825
0/4
C1205
1u/4/X5R/16V/K
PS_NVVDD_PWM8
R152
10k/X
PS_NVVDD_S_THWN
R856
0/4
PS_NVVDD_S_THWN_PH8
PS_NVVDD_DRVON
R875
10K/4
PS_NVVDD_PH8_ZCD*
R836
25.5k/X
C1229
0.1uF/X
R857
0ohm/X
PS_NVVDD_BOOT_PH8
C92
0.1u/4/X7R/16V/K
R142
0ohm/X
PS_NVVDD_BOOT_R_PH8
PS_NVVDD_VSWH_PH8
C83
0.1uF/X
PS_NVVDD_PHASE8_SW
C1188
820p/4/X7R/50V/K
PS_NVVDD_SNUB_PH8
R810
1.8/8
L18
0.15uH/45A/S/0.6m
SNN_NVVDD_GL1_PH8
SNN_NVVDD_GL2_PH8
R184
0/4
R185
20/4/1
PS_NVVDD_CSN8
PS_NVVDD_PH8
C207
10uF/X
C62854
C62855
330u/SP/2.0V/S/9m/X
C150
820uF/FP/S/2.5V/68/7m
C157
47uF/X
C188
47uF/X
C172
47uF/X
C206
47uF/X
C181
47uF/X
C142
47uF/X
C126
47uF/X
C1086
47uF/X
C123
47uF/X
C1157
47uF/X

NVVDD PH8(PWM8)

ASSEMBLY <ASSEMBLY_DESCRIPTION>

PAGE DETAIL PS: NVVDD PH10, PH8

ALL NVIDIA DESIGN SPECIFICATIONS, REFERENCE SPECIFICATIONS, REFERENCE BOARDS, FILES, DRAWINGS, DIAGNOSTICS, LISTS AND OTHER DOCUMENTS OR INFORMATION (TOGETHER AND SEPARATELY, 'MATERIALS') ARE BEING PROVIDED 'AS IS'. THE MATERIALS MAY CONTAIN KNOWN AND UNKNOWN VIOLATIONS OR DEVIATIONS OF INDUSTRY STANDARDS AND SPECIFICATIONS. NVIDIA MAKES NO WARRANTIES, EXPRESSED, IMPLIED, STATUTORY OR OTHERWISE WITH RESPECT TO THE MATERIALS OR OTHERWISE, AND EXPRESSLY DISCLAIMS ALL IMPLIED WARRANTIES INCLUDING, WITHOUT LIMITATION, THE WARRANTIES OF DESIGN, OF NONINFRINGEMENT, MERCHANTABILITY OR FITNESS FOR A PARTICULAR PURPOSE, OR ARISING FROM A COURSE OF DEALING, TRADE USAGE, TRADE PRACTICE, OR INDUSTRY STANDARDS.

GIGABYTE

Title Page41: NVVDD PH10 & 8

Size Custom Document Number GV-N3070AORUS M-8GD Rev 1.0

Date: Friday, August 07, 2020 Sheet 41 of 57

Page42: Input Power Balancing Switcher

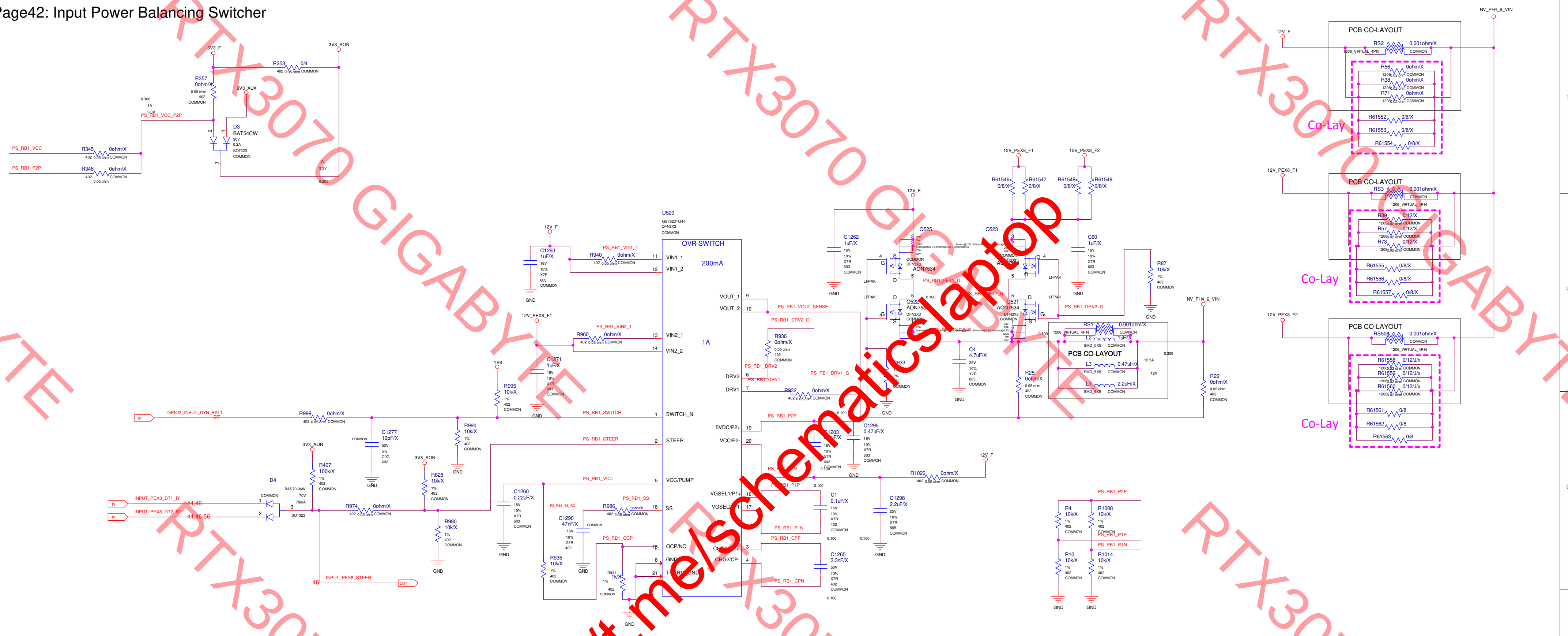
U520
GS7623TQ-R
QFN3X3
COMMON
OVR-SWITCH
200mA
1A
VIN1_1
VIN1_2
VIN2_1
VIN2_2
VOUT_1
VOUT_2
DRV2
DRV1
SWITCH_N
STEER
VCC/PUMP
SS
OCP/NC
GND
THERM_GND
5VDC/P2+
VCC/P2-
VGSEL1/P1+
VGSEL2/P1-
CHG1/CP+
CHG2/CP-
PS_RB1_VCC
PS_RB1_P2P
PS_RB1_VCC_P2P
R345 0ohm/X
R346 0ohm/X
R353 0/4
R357 0ohm/X
D3 BAT54CW
D4 BAS70-06W
3V3_F
3V3_AON
3V3_AUX
12V_F
12V_PEX8_F1
12V_PEX8_F2
NV_PH4_6_VIN
1V8
GPIO2_INPUT_DYN_BAL1
INPUT_PEX8_DT1_R
INPUT_PEX8_DT2_R
INPUT_PEX8_STEER
PS_RB1_VIN1_1
PS_RB1_VIN2_1
PS_RB1_SWITCH
PS_RB1_STEER
PS_RB1_SS
PS_RB1_OCP
PS_RB1_VOUT_SENSE
PS_RB1_DRV2_G
PS_RB1_DRV1_G
PS_RB1_DRV2
PS_RB1_DRV1
PS_RB1_P1P
PS_RB1_P1N
PS_RB1_CPP
PS_RB1_CPN
PS_RB1_FET1_D
PS_RB1_FET2_D
Q525 AON7534
Q523 AON7534
Q522 AON7534
Q521 AON7534
C1263 1uF/X
C1271 1uF/X
C1277 10pF/X
C1260 0.22uF/X
C1290 47nF/X
C1262 1uF/X
C60 1uF/X
C4 4.7uF/X
C1283 1uF/X
C1295 0.47uF/X
C1 0.1uF/X
C1298 2.2uF/X
C1265 3.3nF/X
R940 0ohm/X
R960 0ohm/X
R999 0ohm/X
R995 10k/X
R990 10k/X
R407 100k/X
R628 10k/X
R974 0ohm/X
R980 10k/X
R935 10k/X
R986 0ohm/X
R931 1k/X
R936 0ohm/X
R932 0ohm/X
R933
R1020 0ohm/X
R87 10k/X
R25 0ohm/X
R29 0ohm/X
R4 10k/X
R1008 10k/X
R10 10k/X
R1014 10k/X
R61546 0/8/X
R61547 0/8/X
R61548 0/8/X
R61549 0/8/X
RS1 0.001ohm/X
L2 1uH/X
L3 0.47uH/X
L1 2.2uH/X
PCB CO-LAYOUT
RS2 0.001ohm/X
R56 0ohm/X
R38 0ohm/X
R71 0ohm/X
R61552 0/8/X
R61553 0/8/X
R61554 0/8/X
RS3 0.001ohm/X
R39 0/12/X
R57 0/12/X
R73 0/12/X
R61555 0/8/X
R61556 0/8/X
R61557 0/8/X
RS502 0.001ohm/X
R61558 0/12/J/x
R61559 0/12/J/x
R61560 0/12/J/x
R61561 0/8
R61562 0/8
R61563 0/8
Co-Lay
GND
LFPAK
SMD_5X5
1206_VIRTUAL_4PIN

ASSEMBLY <ASSEMBLY_DESCRIPTION>
PAGE DETAIL PS: OVRS_INPUT POWER BALANCE

ALL NVIDIA DESIGN SPECIFICATIONS, REFERENCE SPECIFICATIONS, REFERENCE BOARDS, FILES, DRAWINGS, DIAGNOSTICS, LISTS AND OTHER DOCUMENTS OR INFORMATION (TOGETHER AND SEPARATELY, 'MATERIALS') ARE BEING PROVIDED 'AS IS'. THE MATERIALS MAY CONTAIN KNOWN AND UNKNOWN VIOLATIONS OR DEVIATIONS OF INDUSTRY STANDARDS AND SPECIFICATIONS. NVIDIA MAKES NO WARRANTIES, EXPRESSED, IMPLIED, STATUTORY OR OTHERWISE WITH RESPECT TO THE MATERIALS OR OTHERWISE, AND EXPRESSLY DISCLAIMS ALL IMPLIED WARRANTIES INCLUDING, WITHOUT LIMITATION, THE WARRANTIES OF DESIGN, OF NONINFRINGEMENT, MERCHANTABILITY OR FITNESS FOR A PARTICULAR PURPOSE, OR ARISING FROM A COURSE OF DEALING, TRADE USAGE, TRADE PRACTICE, OR INDUSTRY STANDARDS.

GIGABYTE

Title	Page42: Input Power Balancing Switcher	
Size Custom	Document Number GV-N3070AORUS M-8GD	Rev 1.0
Date: Thursday, August 06, 2020	Sheet 42 of 57	

Page43: INPUT SWITCH RTD3 (12V & 3V3_A SWITCHER)

AND GATE LOGIC

GPIO1	GPIO29	SWITCH	VOUT
0	0	0	12V
0	1	0	12V
1	0	0	12V
1	1	1	3V3A

SWITCH	VOUT
0	VOUT = VIN1
1	VOUT = VIN2

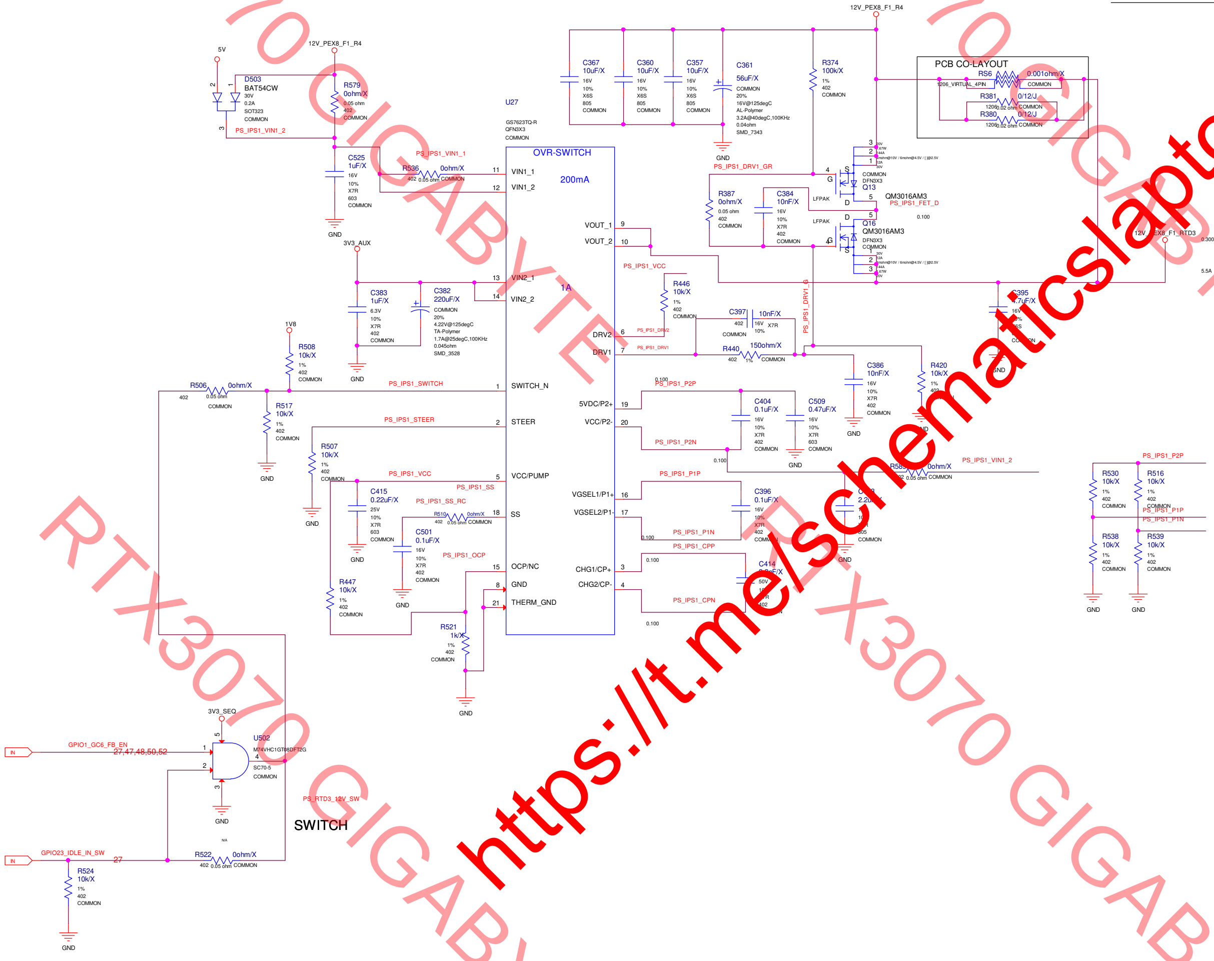

5V
D503
BAT54CW
30V
0.2A
SOT323
COMMON
12V_PEX8_F1_R4
R579
0ohm/X
0.05 ohm
402
COMMON
PS_IPS1_VIN1_2
C525
1uF/X
16V
10%
X7R
603
COMMON
GND
PS_IPS1_VIN1_1
R536
0ohm/X
402
0.05 ohm
COMMON
U27
GS7623TQ-R
QFN3X3
COMMON
OVR-SWITCH
200mA
VIN1_1
VIN1_2
VOUT_1
VOUT_2
VIN2_1
VIN2_2
1A
DRV2
DRV1
SWITCH_N
STEER
VCC/PUMP
SS
OCP/NC
GND
THERM_GND
5VDC/P2+
VCC/P2-
VGSEL1/P1+
VGSEL2/P1-
CHG1/CP+
CHG2/CP-
3V3_AUX
C383
1uF/X
6.3V
10%
X7R
402
COMMON
C382
220uF/X
COMMON
20%
4.22V@125degC
TA-Polymer
1.7A@25degC,100KHz
0.045ohm
SMD_3528
1V8
R508
10k/X
1%
402
COMMON
R506
0ohm/X
402
0.05 ohm
COMMON
R517
10k/X
1%
402
COMMON
PS_IPS1_SWITCH
PS_IPS1_STEER
R507
10k/X
1%
402
COMMON
PS_IPS1_VCC
PS_IPS1_SS
C415
0.22uF/X
25V
10%
X7R
603
COMMON
PS_IPS1_SS_RC
R510
0ohm/X
402
0.05 ohm
COMMON
C501
0.1uF/X
16V
10%
X7R
402
COMMON
PS_IPS1_OCP
R447
10k/X
1%
402
COMMON
R521
1k/X
1%
402
COMMON
C367
10uF/X
C360
10uF/X
C357
10uF/X
16V
10%
X6S
805
COMMON
C361
56uF/X
COMMON
20%
16V@125degC
AL-Polymer
3.2A@40degC,100KHz
0.04ohm
SMD_7343
R374
100k/X
1%
402
COMMON
PS_IPS1_DRV1_GR
R387
0ohm/X
0.05 ohm
402
COMMON
C384
10nF/X
16V
10%
X7R
402
COMMON
LFPAK
Q13
QM3016AM3
DFN3X3
COMMON
Q16
QM3016AM3
PS_IPS1_FET_D
4mohm@10V / 6mohm@4.5V / [ ]@2.5V
12A
30V
144A
1.67W
20V
0.100
PCB CO-LAYOUT
RS6
0.001ohm/X
1206_VIRTUAL_4PIN
COMMON
R381
0/12/J
1206
0.02 ohm
COMMON
R380
0/12/J
1206
0.02 ohm
COMMON
12V_PEX8_F1_RTD3
0.300
5.5A
C395
4.7uF/X
16V
X6S
COMMON
PS_IPS1_VCC
R446
10k/X
1%
402
COMMON
C397
10nF/X
16V
X7R
402
10%
COMMON
R440
150ohm/X
402
1%
COMMON
PS_IPS1_DRV2
PS_IPS1_DRV1
PS_IPS1_DRV1_G
C386
10nF/X
16V
10%
X7R
402
COMMON
R420
10k/X
1%
402
PS_IPS1_P2P
PS_IPS1_P2N
C404
0.1uF/X
16V
10%
X7R
402
COMMON
C509
0.47uF/X
16V
10%
X7R
603
COMMON
PS_IPS1_P1P
PS_IPS1_P1N
C396
0.1uF/X
16V
10%
X7R
402
COMMON
R58
0ohm/X
402
0.05 ohm
COMMON
PS_IPS1_VIN1_2
2.2uF/X
805
COMMON
PS_IPS1_CPP
PS_IPS1_CPN
C414
50V
402
0.100
R530
10k/X
R516
10k/X
R538
10k/X
R539
10k/X
1%
402
COMMON
PS_IPS1_P2P
PS_IPS1_P1P
PS_IPS1_P1N
3V3_SEQ
U502
M74VHC1G08DFT2G
SC70-5
COMMON
IN
GPIO1_GC6_FB_EN
27,47,48,50,52
GPIO23_IDLE_IN_SW
27
PS_RTD3_12V_SW
SWITCH
N/A
R522
0ohm/X
402
0.05 ohm
COMMON
R524
10k/X
1%
402
COMMON
GND

ASSEMBLY
PAGE DETAIL

<ASSEMBLY_DESCRIPTION>
PS: RDT3_12V & 3V3_A Switcher

ALL NVIDIA DESIGN SPECIFICATIONS, REFERENCE SPECIFICATIONS, REFERENCE BOARDS, FILES, DRAWINGS, DIAGNOSTICS, LISTS AND OTHER DOCUMENTS OR INFORMATION (TOGETHER AND SEPARATELY, 'MATERIALS') ARE BEING PROVIDED 'AS IS'. THE MATERIALS MAY CONTAIN KNOWN AND UNKNOWN VIOLATIONS OR DEVIATIONS OF INDUSTRY STANDARDS AND SPECIFICATIONS. NVIDIA MAKES NO WARRANTIES, EXPRESSED, IMPLIED, STATUTORY OR OTHERWISE WITH RESPECT TO THE MATERIALS OR OTHERWISE, AND EXPRESSLY DISCLAIMS ALL IMPLIED WARRANTIES INCLUDING, WITHOUT LIMITATION, THE WARRANTIES OF DESIGN, OF NONINFRINGEMENT, MERCHANTABILITY OR FITNESS FOR A PARTICULAR PURPOSE, OR ARISING FROM A COURSE OF DEALING, TRADE USAGE, TRADE PRACTICE, OR INDUSTRY STANDARDS.

GIGABYTE

Title
Page42: Input Power Balancing Switcher

Size: Custom
Document Number: GV-N3070AORUS M-8GD
Rev: 1.0
Date: Tuesday, August 04, 2020
Sheet 43 of 57

Page44: 12V_EXT_INPUT, FILTERING & UNDER POWER BOOT

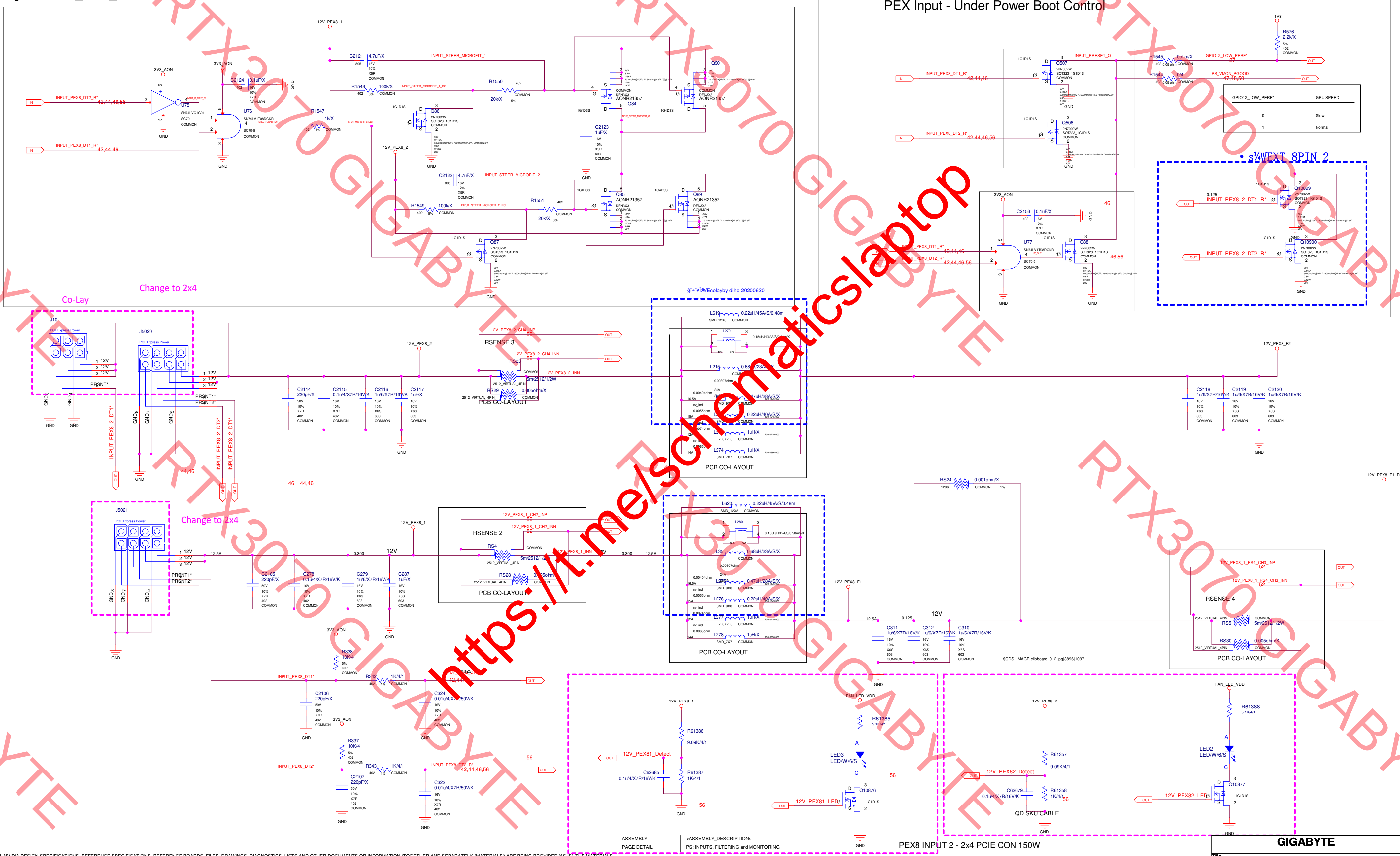
PEX Input - Under Power Boot Control
12V_PEX8_1
C2121 4.7uF/X 805 16V 10% X5R COMMON
INPUT_STEER_MICROFIT_1
R1548 100k/X 402 5% COMMON
INPUT_STEER_MICROFIT_1_RC
R1550 402 20k/X 5% COMMON
3V3_AON
C2124 0.1uF/X 402 16V 10% X7R COMMON
GND
IN INPUT_PEX8_DT2_R* 42,44,46,56
U75 SN74LVC1G04 SC70 COMMON
INPUT_B_PSNT_R*
U76 SN74LV1T08DCKR SC70-5 COMMON
STEER_CONDITION
IN INPUT_PEX8_DT1_R* 42,44,46
R1547 1k/X 402 1% COMMON
INPUT_MICROFIT_STEER
Q86 2N7002W SOT323_1G1D1S COMMON 1G1D1S
60V 0.115A 5000mohm@10V / 7500mohm@4.5V / 0mohm@2.5V 0.8A 0.12W 20V
Q84 AONR21357 DFN3X3 COMMON 1G4D3S
25V 3.2W -136A 10.7mohm@10V / 12.3mohm@4.5V / [ ]@2.5V -17A -30V
Q90 AONR21357 DFN3X3 COMMON 1G4D3S
INPUT_STEER_MICROFIT_C
C2123 1uF/X 16V 10% X5R 603 COMMON
12V_PEX8_2
C2122 4.7uF/X 805 16V 10% X5R COMMON
INPUT_STEER_MICROFIT_2
R1549 100k/X 402 5% COMMON
INPUT_STEER_MICROFIT_2_RC
R1551 402 20k/X 5% COMMON
Q85 AONR21357 DFN3X3 COMMON 1G4D3S
Q89 AONR21357 DFN3X3 COMMON 1G4D3S
Q87 2N7002W SOT323_1G1D1S COMMON 1G1D1S
1V8
R576 2.2k/X 5% 402 COMMON
Q507 2N7002W SOT323_1G1D1S COMMON 1G1D1S
INPUT_PRESET_Q
R1545 0ohm/X 402 0.05 ohm COMMON
GPIO12_LOW_PERF* 27 OUT
R1544 0/4 402 0.05 ohm COMMON
PS_VMON_PGOOD 47,48,50 OUT
GPIO12_LOW_PERF* | GPU SPEED
0 | Slow
1 | Normal
Q506 2N7002W SOT323_1G1D1S COMMON 1G1D1S
IN INPUT_PEX8_DT2_R* 42,44,46,56
U77 SN74LV1T08DCKR SC70-5 COMMON
U7_OUT
C2153 0.1uF/X 402 16V 10% X7R COMMON
Q88 2N7002W SOT323_1G1D1S COMMON 1G1D1S
46 46,56
• s¼WEXT_8PIN_2
Q10899 2N7002W SOT323_1G1D1S COMMON 1G1D1S
0.125 INPUT_PEX8_2_DT1_R* OUT
Q10900 2N7002W SOT323_1G1D1S COMMON 1G1D1S
INPUT_PEX8_2_DT2_R* OUT
Change to 2x4
Co-Lay
J10 PCI_Express Power
1 12V 2 12V 3 12V PRSNT* GND6 GND4
J5020 PCI_Express Power
1 12V 2 12V 3 12V PRSNT1* PRSNT2* GND8 GND7 GND5
INPUT_PEX8_2_DT1* OUT
INPUT_PEX8_2_DT2* OUT
INPUT_PEX8_2_DT1* OUT
44,46 46 44,46
C2114 220pF/X 50V 10% X7R 402 COMMON
C2115 0.1u/4/X7R/16V/K 16V 10% X7R 402 COMMON
C2116 1u/6/X7R/16V/K 16V 10% X6S 603 COMMON
C2117 1uF/X 16V 10% X6S 603 COMMON
RSENSE 3
12V_PEX8_2_CH4_INP 52 OUT
12V_PEX8_2_CH4_INN 52 OUT
RS23 5m/2512/1/2W COMMON 2512_VIRTUAL_4PIN
12V_PEX8_2_INN
RS29 0.005ohm/X 2512_VIRTUAL_4PIN COMMON
PCB CO-LAYOUT
§ï±`¥Î®Æcolayby diho 20200620
L619 0.22uH/45A/S/0.48m SMD_12X8 COMMON
L279 0.15uH/H/42A/S/0.58m/±/X
L215 0.68uH/23A/S/X COMMON
0.00307ohm 24A 0.00404ohm 16.5A nv_ind 0.0055ohm 15A 0.0074ohm 12A 0.0065ohm 14A
0.47uH/28A/S/X SMD_9X8 COMMON 130-1176-000
0.22uH/40A/S/X SMD COMMON 130-1245-000
1uH/X 7_6X7_6 COMMON 130-0429-000
L274 1uH/X SMD_7X7 COMMON 130-0996-000
12V_PEX8_F2
C2118 1u/6/X7R/16V/K 16V 10% X6S 603 COMMON
C2119 1u/6/X7R/16V/K 16V 10% X6S 603 COMMON
C2120 1u/6/X7R/16V/K 16V 10% X6S 603 COMMON
RS24 0.001ohm/X 1206 COMMON 1%
12V_PEX8_F1_R4
J5021 PCI_Express Power
1 12V 2 12V 3 12V PRSNT1* PRSNT2* GND8 GND7 GND5
12.5A 0.300 12V
C2105 220pF/X 50V 10% X7R 402 COMMON
C278 0.1u/4/X7R/16V/K 16V 10% X7R 402 COMMON
C279 1u/6/X7R/16V/K 16V 10% X6S 603 COMMON
C287 1uF/X 16V 10% X6S 603 COMMON
12V_PEX8_1
RSENSE 2
12V_PEX8_1_CH2_INP 52 OUT
12V_PEX8_1_CH2_INN 52 OUT
RS4 5m/2512/1/2W COMMON 2512_VIRTUAL_4PIN
12V_PEX8_1_INN
RS28 0.005ohm/X 2512_VIRTUAL_4PIN COMMON
PCB CO-LAYOUT
L620 0.22uH/45A/S/0.48m SMD_12X8 COMMON
L280 0.15uH/H/42A/S/0.58m/±/X
L35 0.68uH/23A/S/X COMMON
L275 0.47uH/28A/S/X SMD_9X8 COMMON 130-1176-000
L276 0.22uH/40A/S/X SMD_9X8 COMMON 130-1245-000
L277 1uH/X 7_6X7_6 COMMON 130-0429-000
L278 1uH/X SMD_7X7 COMMON 130-0996-000
PCB CO-LAYOUT
12V_PEX8_F1
12.5A 0.125 12V
C311 1u/6/X7R/16V/K 16V 10% X6S 603 COMMON
C312 1u/6/X7R/16V/K 16V 10% X6S 603 COMMON
C310 1u/6/X7R/16V/K 16V 10% X6S 603 COMMON
$CDS_IMAGE|clipboard_0_2.jpg|3896|1097
RSENSE 4
12V_PEX8_1_RS4_CH3_INP 52 OUT
12V_PEX8_1_RS4_CH3_INN 52 OUT
RS5 5m/2512/1/2W COMMON 2512_VIRTUAL_4PIN
RS30 0.005ohm/X 2512_VIRTUAL_4PIN COMMON
PCB CO-LAYOUT
3V3_AON
R338 10K/4 5% 402 COMMON
INPUT_PEX8_DT1*
R342 1K/4/1 402 1% COMMON
INPUT_PEX8_DT1_R* 42,44,46 OUT
C2106 220pF/X 50V 10% X7R 402 COMMON
C324 0.01u/4/X7R/50V/K 16V 10% X7R 402 COMMON
R337 10K/4 5% 402 COMMON
INPUT_PEX8_DT2*
R343 1K/4/1 402 1% COMMON
INPUT_PEX8_DT2_R* 42,44,46,56 OUT 56
C2107 220pF/X 50V 10% X7R 402 COMMON
C322 0.01u/4/X7R/50V/K 16V 10% X7R 402 COMMON
12V_PEX8_1
R61386 9.09K/4/1
12V_PEX81_Detect OUT
C62685 0.1u/4/X7R/16V/K
R61387 1K/4/1
56
FAN_LED_VDD
R61385 5.1K/4/1
LED3 LED/W/6/S A C
Q10876 1G1D1S
12V_PEX81_LED OUT
56
12V_PEX8_2
R61357 9.09K/4/1
12V_PEX82_Detect OUT
C62679 0.1u/4/X7R/16V/K
R61358 1K/4/1 56
QD SKU CABLE
FAN_LED_VDD
R61388 5.1K/4/1
LED2 LED/W/6/S A C
Q10877 1G1D1S
12V_PEX82_LED OUT
PEX8 INPUT 2 - 2x4 PCIE CON 150W
ASSEMBLY <ASSEMBLY_DESCRIPTION>
PAGE DETAIL PS: INPUTS, FILTERING and MONITORING
A B C D E F G H
1 2 3 4 5

ALL NVIDIA DESIGN SPECIFICATIONS, REFERENCE SPECIFICATIONS, REFERENCE BOARDS, FILES, DRAWINGS, DIAGNOSTICS, LISTS AND OTHER DOCUMENTS OR INFORMATION (TOGETHER AND SEPARATELY, 'MATERIALS') ARE BEING PROVIDED 'AS IS'. THE MATERIALS MAY CONTAIN KNOWN AND UNKNOWN VIOLATIONS OR DEVIATIONS OF INDUSTRY STANDARDS AND SPECIFICATIONS. NVIDIA MAKES NO WARRANTIES, EXPRESSED, IMPLIED, STATUTORY OR OTHERWISE WITH RESPECT TO THE MATERIALS OR OTHERWISE, AND EXPRESSLY DISCLAIMS ALL IMPLIED WARRANTIES INCLUDING, WITHOUT LIMITATION, THE WARRANTIES OF DESIGN, OF NONINFRINGEMENT, MERCHANTABILITY OR FITNESS FOR A PARTICULAR PURPOSE, OR ARISING FROM A COURSE OF DEALING, TRADE USAGE, TRADE PRACTICE, OR INDUSTRY STANDARDS.

GIGABYTE

Title
12V_EXT_INPUT, FILTERING & UNDER POWER BOOT
Size Custom
Document Number GV-N3070AORUS M-8GD
Rev 1.0
Date: Thursday, August 06, 2020
Sheet 44 of 57

Page45: PEX_INPUT & FILTERING, PEX_3V3, 3V3_AUX

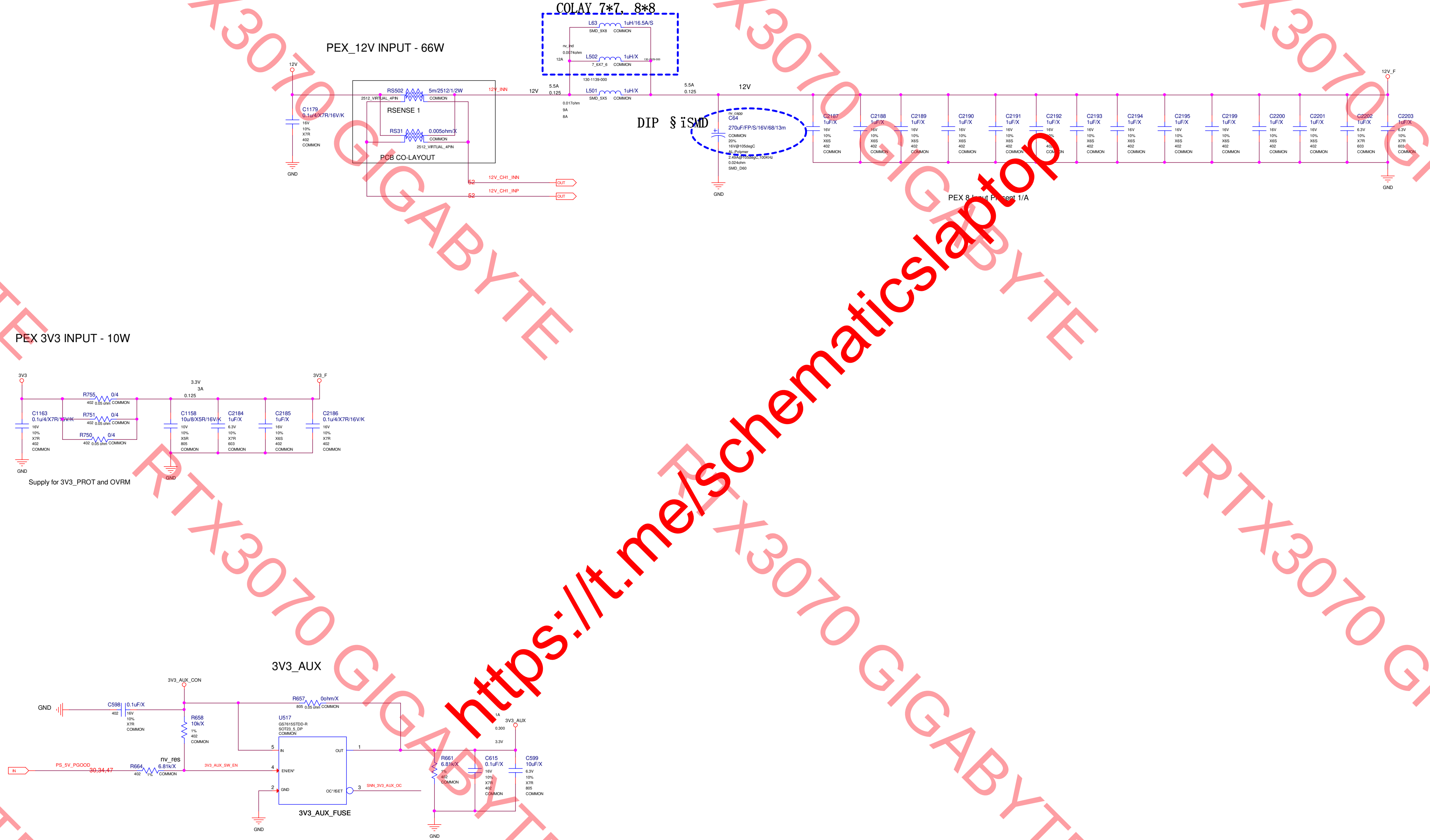

PEX_12V INPUT - 66W
12V
C1179
0.1u/4/X7R/16V/K
16V
10%
X7R
402
COMMON
GND
RS502
5m/2512/1/2W
2512_VIRTUAL_4PIN
COMMON
RSENSE 1
RS31
0.005ohm/X
COMMON
2512_VIRTUAL_4PIN
PCB CO-LAYOUT
12V_INN
12V
52
12V_CH1_INN
OUT
52
12V_CH1_INP
OUT
COLAY 7*7, 8*8
L63
1uH/16.5A/S
SMD_9X8
COMMON
nv_ind
0.0074ohm
12A
L502
1uH/X
7_6X7_6
COMMON
130-0429-000
130-1139-000
5.5A
0.125
L501
1uH/X
SMD_5X5
COMMON
0.017ohm
9A
8A
5.5A
0.125
12V
DIP §ïSMD
nv_capp
C64
270uF/FP/S/16V/68/13m
COMMON
20%
16V@105degC
AL-Polymer
2.49A@105degC,100KHz
0.024ohm
SMD_D60
GND
C2187 1uF/X 16V 10% X6S 402 COMMON
C2188 1uF/X 16V 10% X6S 402 COMMON
C2189 1uF/X 16V 10% X6S 402 COMMON
C2190 1uF/X 16V 10% X6S 402 COMMON
C2191 1uF/X 16V 10% X6S 402 COMMON
C2192 1uF/X 16V 10% X6S 402 COMMON
C2193 1uF/X 16V 10% X6S 402 COMMON
C2194 1uF/X 16V 10% X6S 402 COMMON
C2195 1uF/X 16V 10% X6S 402 COMMON
C2199 1uF/X 16V 10% X6S 402 COMMON
C2200 1uF/X 16V 10% X6S 402 COMMON
C2201 1uF/X 16V 10% X6S 402 COMMON
C2202 1uF/X 6.3V 10% X7R 603 COMMON
C2203 1uF/X 6.3V 10% X7R 603 COMMON
12V_F
GND
PEX 8 Input Present 1/A
PEX 3V3 INPUT - 10W
3V3
C1163
0.1u/4/X7R/16V/K
16V
10%
X7R
402
COMMON
GND
R755 0/4 402 0.05 ohm COMMON
R751 0/4 402 0.05 ohm COMMON
R750 0/4 402 0.05 ohm COMMON
3.3V
3A
0.125
3V3_F
C1158 10u/8/X5R/16V/K 10V 10% X5R 805 COMMON
C2184 1uF/X 6.3V 10% X7R 603 COMMON
C2185 1uF/X 16V 10% X6S 402 COMMON
C2186 0.1u/4/X7R/16V/K 16V 10% X7R 402 COMMON
GND
Supply for 3V3_PROT and OVRM
3V3_AUX
3V3_AUX_CON
GND
C598 0.1uF/X 402 16V 10% X7R COMMON
R658 10k/X 1% 402 COMMON
R657 0ohm/X 805 0.05 ohm COMMON
U517
GS7615STDD-R
SOT23_5_DP
COMMON
5 IN
OUT 1
4 EN/EN*
2 GND
OC*/ISET 3
3V3_AUX_FUSE
IN
PS_5V_PGOOD
30,34,47
R664 6.81k/X 402 1% COMMON
nv_res
3V3_AUX_SW_EN
SNN_3V3_AUX_OC
GND
1A
3V3_AUX
0.300
3.3V
R661 6.81k/X 1% 402 COMMON
C615 0.1uF/X 16V 10% X7R 402 COMMON
C599 10uF/X 6.3V 10% X7R 805 COMMON
GND

ASSEMBLY <ASSEMBLY_DESCRIPTION>
PAGE DETAIL PS: PEX_12V, PEX_3V3 AND A3V3_AUX

ALL NVIDIA DESIGN SPECIFICATIONS, REFERENCE SPECIFICATIONS, REFERENCE BOARDS, FILES, DRAWINGS, DIAGNOSTICS, LISTS AND OTHER DOCUMENTS OR INFORMATION (TOGETHER AND SEPARATELY, 'MATERIALS') ARE BEING PROVIDED 'AS IS'. THE MATERIALS MAY CONTAIN KNOWN AND UNKNOWN VIOLATIONS OR DEVIATIONS OF INDUSTRY STANDARDS AND SPECIFICATIONS. NVIDIA MAKES NO WARRANTIES, EXPRESSED, IMPLIED, STATUTORY OR OTHERWISE WITH RESPECT TO THE MATERIALS OR OTHERWISE, AND EXPRESSLY DISCLAIMS ALL IMPLIED WARRANTIES INCLUDING, WITHOUT LIMITATION, THE WARRANTIES OF DESIGN, OF NONINFRINGEMENT, MERCHANTABILITY OR FITNESS FOR A PARTICULAR PURPOSE, OR ARISING FROM A COURSE OF DEALING, TRADE USAGE, TRADE PRACTICE, OR INDUSTRY STANDARDS.

GIGABYTE
Title
PEX_INPUT & FILTERING, PEX_3V3, 3V3_AUX
Size Custom
Document Number GV-N3070AORUS M-8GD
Rev 1.0
Date: Tuesday, August 04, 2020
Sheet 45 of 57

Page46: STEERING, UPB, HOT UNPLUG

POWER CONNECTOR HOT-UNPLUG DETECT

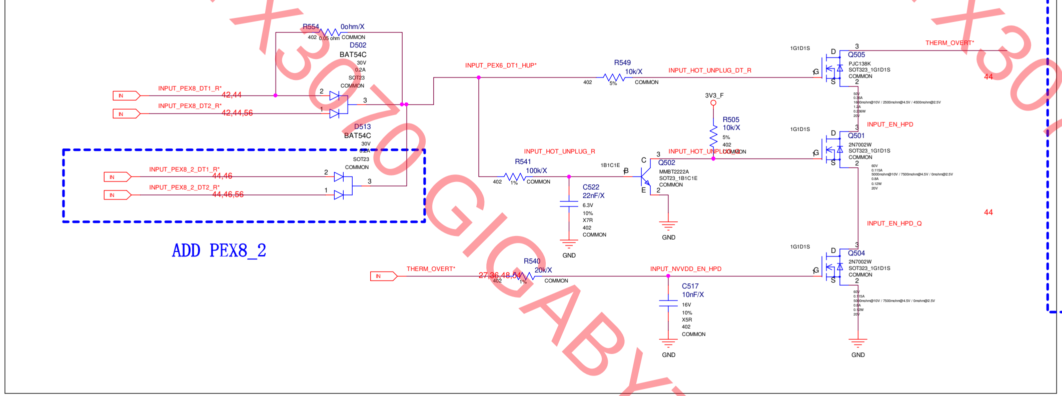

R554 0ohm/X 402 0.05 ohm COMMON
D502 BAT54C 30V 0.2A SOT23 COMMON
INPUT_PEX8_DT1_R* 42,44
INPUT_PEX8_DT2_R* 42,44,56
D513 BAT54C 30V SOT23 COMMON
INPUT_PEX8_2_DT1_R* 44,46
INPUT_PEX8_2_DT2_R* 44,46,56
ADD PEX8_2
INPUT_PEX6_DT1_HUP*
R549 10k/X 402 5% COMMON
INPUT_HOT_UNPLUG_DT_R
Q505 PJC138K SOT323_1G1D1S COMMON
THERM_OVERT* 44
3V3_F
R505 10k/X 5% 402 COMMON
INPUT_HOT_UNPLUG_R
R541 100k/X 402 1% COMMON
C522 22nF/X 6.3V 10% X7R 402 COMMON
Q502 MMBT2222A SOT23_1B1C1E COMMON
INPUT_HOT_UNPLUG_Q
Q501 2N7002W SOT323_1G1D1S COMMON
INPUT_EN_HPD
INPUT_EN_HPD_Q 44
THERM_OVERT* 27,36,48,54
R540 20k/X 402 1% COMMON
INPUT_NVVDD_EN_HPD
C517 10nF/X 16V 10% X5R 402 COMMON
Q504 2N7002W SOT323_1G1D1S COMMON
GND

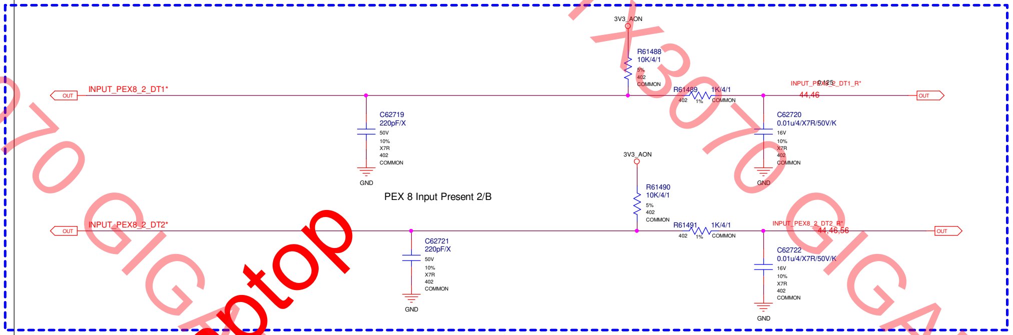

3V3_AON
R61488 10K/4/1 1% 402 COMMON
INPUT_PEX8_2_DT1*
OUT
C62719 220pF/X 50V 10% X7R 402 COMMON
R61489 1K/4/1 402 1% COMMON
INPUT_PEX8_2_DT1_R* 44,46
C62720 0.01u/4/X7R/50V/K 16V 10% X7R 402 COMMON
PEX 8 Input Present 2/B
R61490 10K/4/1 5% 402 COMMON
INPUT_PEX8_2_DT2*
C62721 220pF/X 50V 10% X7R 402 COMMON
R61491 1K/4/1 402 1% COMMON
INPUT_PEX8_2_DT2_R* 44,46,56
C62722 0.01u/4/X7R/50V/K 16V 10% X7R 402 COMMON
GND

12V CURRENT STEERING (UNDER POWER BOOT):

GUIDES CURRENT FROM PEX EDGE TO PEX 8 PIN INPUT AREA

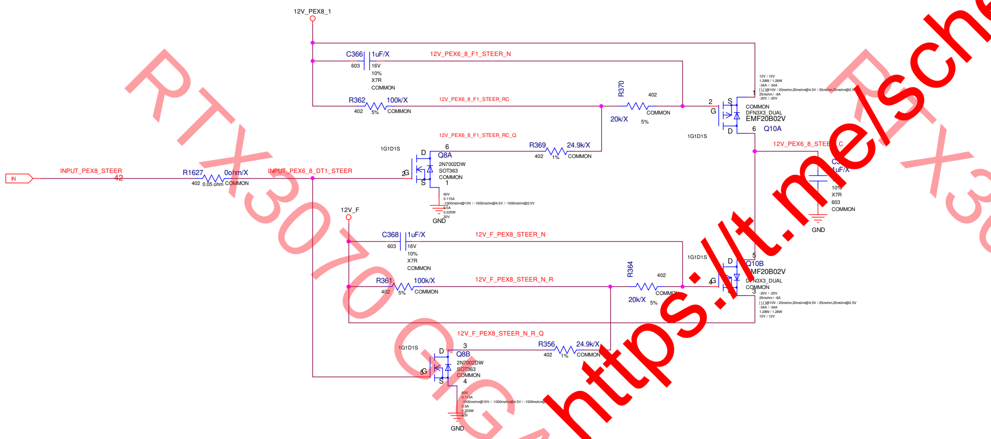

12V_PEX8_1
C366 1uF/X 603 16V 10% X7R COMMON
12V_PEX6_8_F1_STEER_N
R362 100k/X 402 5% COMMON
12V_PEX6_8_F1_STEER_RC
R370 20k/X 402 5% COMMON
Q10A DFN3X3_DUAL EMF20B02V COMMON
12V_PEX6_8_F1_STEER_RC_Q
R369 24.9k/X 402 1% COMMON
Q8A 2N7002DW SOT363 COMMON
INPUT_PEX8_STEER 42
R1627 0ohm/X 402 0.05 ohm COMMON
INPUT_PEX6_8_DT1_STEER
12V_PEX6_8_STEER_C
C367 1uF/X 16V X7R 603 COMMON
12V_F
C368 1uF/X 603 16V 10% X7R COMMON
12V_F_PEX8_STEER_N
R361 100k/X 402 5% COMMON
12V_F_PEX8_STEER_N_R
R364 20k/X 402 5% COMMON
Q10B EMF20B02V DFN3X3_DUAL COMMON
12V_F_PEX8_STEER_N_R_Q
R356 24.9k/X 402 1% COMMON
Q8B 2N7002DW SOT363 COMMON
GND

12V CURRENT STEERING (UNDER POWER BOOT):

GUIDES CURRENT FROM PEX EDGE TO PEX 8 PIN INPUT AREA

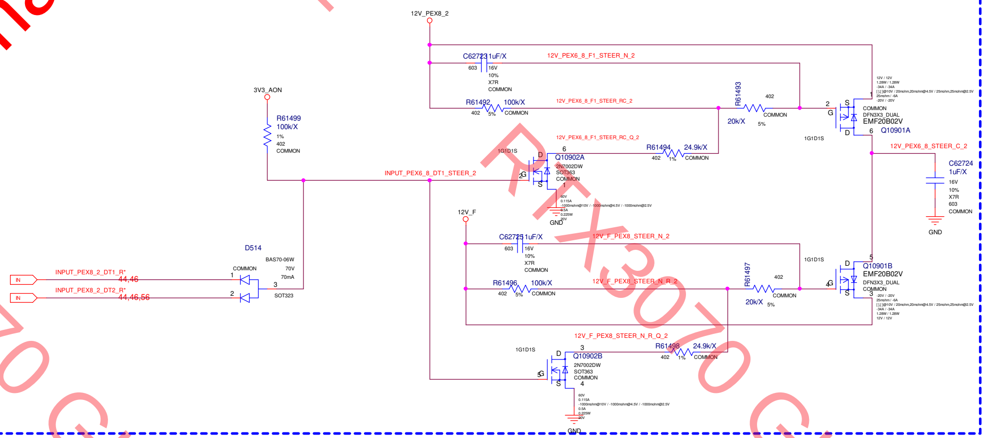

12V_PEX8_2
C62723 1uF/X 603 16V 10% X7R COMMON
12V_PEX6_8_F1_STEER_N_2
R61492 100k/X 402 5% COMMON
12V_PEX6_8_F1_STEER_RC_2
R61493 20k/X 402 5% COMMON
Q10901A DFN3X3_DUAL EMF20B02V COMMON
12V_PEX6_8_STEER_C_2
C62724 1uF/X 16V 10% X7R 603 COMMON
3V3_AON
R61499 100k/X 1% 402 COMMON
12V_PEX6_8_F1_STEER_RC_Q_2
R61494 24.9k/X 402 1% COMMON
Q10902A 2N7002DW SOT363 COMMON
INPUT_PEX6_8_DT1_STEER_2
12V_F
D514 BAS70-06W 70V 70mA SOT323 COMMON
INPUT_PEX8_2_DT1_R* 44,46
INPUT_PEX8_2_DT2_R* 44,46,56
C62725 1uF/X 603 16V 10% X7R COMMON
12V_F_PEX8_STEER_N_2
R61496 100k/X 402 5% COMMON
12V_F_PEX8_STEER_N_R_2
R61497 20k/X 402 5% COMMON
Q10901B EMF20B02V DFN3X3_DUAL COMMON
12V_F_PEX8_STEER_N_R_Q_2
R61498 24.9k/X 402 1% COMMON
Q10902B 2N7002DW SOT363 COMMON
GND

ADD PEX8_2

ASSEMBLY <ASSEMBLY_DESCRIPTION>
PAGE DETAIL PS: STEERING, UPB, HOT UNPLUG

ALL NVIDIA DESIGN SPECIFICATIONS, REFERENCE SPECIFICATIONS, REFERENCE BOARDS, FILES, DRAWINGS, DIAGNOSTICS, LISTS AND OTHER DOCUMENTS OR INFORMATION (TOGETHER AND SEPARATELY, 'MATERIALS') ARE BEING PROVIDED 'AS IS'. THE MATERIALS MAY CONTAIN KNOWN AND UNKNOWN VIOLATIONS OR DEVIATIONS OF INDUSTRY STANDARDS AND SPECIFICATIONS. NVIDIA MAKES NO WARRANTIES, EXPRESSED, IMPLIED, STATUTORY OR OTHERWISE WITH RESPECT TO THE MATERIALS OR OTHERWISE, AND EXPRESSLY DISCLAIMS ALL IMPLIED WARRANTIES INCLUDING, WITHOUT LIMITATION, THE WARRANTIES OF DESIGN, OF NONINFRINGEMENT, MERCHANTABILITY OR FITNESS FOR A PARTICULAR PURPOSE, OR ARISING FROM A COURSE OF DEALING, TRADE USAGE, TRADE PRACTICE, OR INDUSTRY STANDARDS.

GIGABYTE

Title
STEERING, UPB, HOT UNPLUG
Size Custom
Document Number GV-N3070AORUS M-8GD
Rev 1.0
Date: Tuesday, August 04, 2020
Sheet 46 of 57

Page47: SEQ: 5V, 1V8, 3V3_SEQ, DDC_5V, DP_AUX_PROT

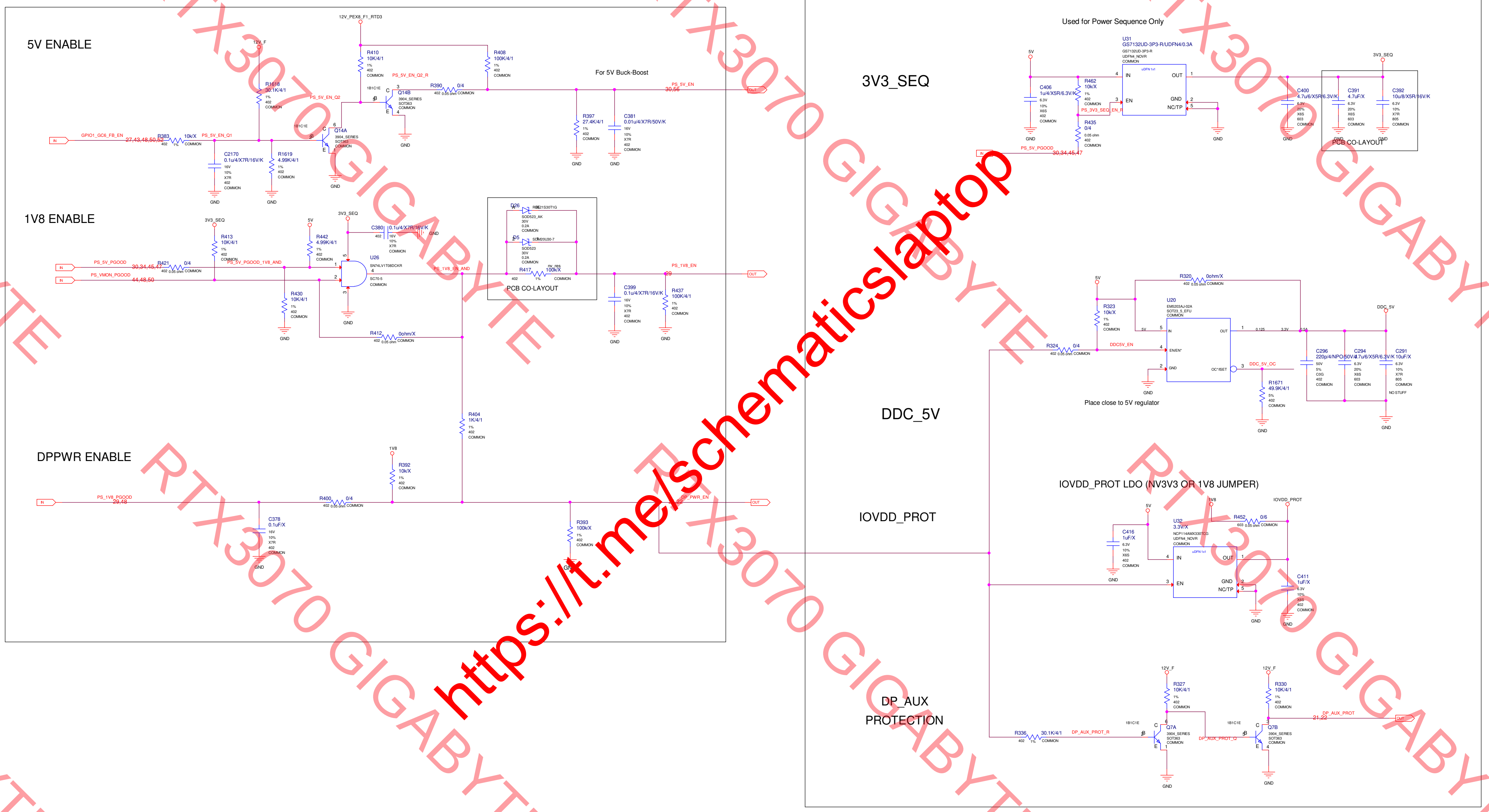
5V ENABLE
12V_PEX8_F1_RTD3
12V_F
R410 10K/4/1 1% 402 COMMON
R408 100K/4/1 1% 402 COMMON
R1618 30.1K/4/1 1% 402 COMMON
PS_5V_EN_Q2_R
PS_5V_EN_Q2
Q14B 3904_SERIES SOT363 COMMON
R390 0/4 402 0.05 ohm COMMON
For 5V Buck-Boost
PS_5V_EN 30,56
OUT
GPIO1_GC6_FB_EN 27,43,48,50,52
IN
R383 10k/X 402 1% COMMON
PS_5V_EN_Q1
Q14A 3904_SERIES SOT363 COMMON
R397 27.4K/4/1 1% 402 COMMON
C381 0.01u/4/X7R/50V/K 16V 10% X7R 402 COMMON
C2170 0.1u/4/X7R/16V/K 16V 10% X7R 402 COMMON
R1619 4.99K/4/1 1% 402 COMMON
GND
1V8 ENABLE
3V3_SEQ
5V
C380 0.1u/4/X7R/16V/K 402 16V 10% X7R COMMON
R413 10K/4/1 1% 402 COMMON
R442 4.99K/4/1 1% 402 COMMON
PS_5V_PGOOD 30,34,45,47
R421 0/4 402 0.05 ohm COMMON
PS_5V_PGOOD_1V8_AND
PS_VMON_PGOOD 44,48,50
U26 SN74LV1T08DCKR SC70-5 COMMON
PS_1V8_EN_AND
D26 RB521S30T1G SOD523_AK 30V 0.2A COMMON
D5 SDM20U30-7 SOD523 30V 0.2A COMMON
R417 100K/X 402 1% COMMON
nv_res
PCB CO-LAYOUT
PS_1V8_EN 29
C399 0.1u/4/X7R/16V/K 16V 10% X7R 402 COMMON
R437 100K/4/1 1% 402 COMMON
R430 10K/4/1 1% 402 COMMON
R412 0ohm/X 402 0.05 ohm COMMON
R404 1K/4/1 1% 402 COMMON
DPPWR ENABLE
1V8
R392 10k/X 1% 402 COMMON
PS_1V8_PGOOD 29,48
R400 0/4 402 0.05 ohm COMMON
DP_PWR_EN 32
C378 0.1uF/X 16V 10% X7R 402 COMMON
R393 100k/X 1% 402 COMMON
3V3_SEQ
Used for Power Sequence Only
U31 GS7132UD-3P3-R/UDFN4/0.3A GS7132UD-3P3-R UDFN4_NOVR COMMON
uDFN 1x1
IN OUT EN GND NC/TP
C406 1u/4/X5R/6.3V/K 6.3V 10% X6S 402 COMMON
R462 10k/X 1% 402 COMMON
PS_3V3_SEQ_EN_R
R435 0/4 0.05 ohm 402 COMMON
PS_5V_PGOOD 30,34,45,47
C400 4.7u/6/X5R/6.3V/K 6.3V 20% X6S 603 COMMON
C391 4.7uF/X 6.3V 20% X6S 603 COMMON
C392 10u/8/X5R/16V/K 6.3V 10% X7R 805 COMMON
PCB CO-LAYOUT
DDC_5V
R320 0ohm/X 402 0.05 ohm COMMON
R323 10k/X 1% 402 COMMON
U20 EM5203AJ-02A SOT23_5_EFU COMMON
IN OUT EN/EN* GND OC*/SET
R324 0/4 402 0.05 ohm COMMON
DDC5V_EN
DDC_5V_OC
R1671 49.9K/4/1 5% 402 COMMON
C296 220p/4/NPO/50V/J 50V 5% C0G 402 COMMON
C294 4.7u/6/X5R/6.3V/K 6.3V 20% X6S 603 COMMON
C291 10uF/X 6.3V 10% X7R 805 COMMON NO STUFF
Place close to 5V regulator
IOVDD_PROT
IOVDD_PROT LDO (NV3V3 OR 1V8 JUMPER)
U32 3.3V/X NCP114AMX330TCG UDFN4_NOVR COMMON
C416 1uF/X 6.3V 10% X6S 402 COMMON
R452 0/6 603 0.05 ohm COMMON
C411 1uF/X 6.3V 10% X6S 402 COMMON
DP_AUX PROTECTION
12V_F
R327 10K/4/1 1% 402 COMMON
R330 10K/4/1 1% 402 COMMON
R336 30.1K/4/1 402 1% COMMON
DP_AUX_PROT_R
Q7A 3904_SERIES SOT363 COMMON
DP_AUX_PROT_Q
Q7B 3904_SERIES SOT363 COMMON
DP_AUX_PROT 21,22

ASSEMBLY	<ASSEMBLY_DESCRIPTION>
PAGE DETAIL	SEQ: 5V, 1V8, 3V3_SEQ

ALL NVIDIA DESIGN SPECIFICATIONS, REFERENCE SPECIFICATIONS, REFERENCE BOARDS, FILES, DRAWINGS, DIAGNOSTICS, LISTS AND OTHER DOCUMENTS OR INFORMATION (TOGETHER AND SEPARATELY, 'MATERIALS') ARE BEING PROVIDED 'AS IS'. THE MATERIALS MAY CONTAIN KNOWN AND UNKNOWN VIOLATIONS OR DEVIATIONS OF INDUSTRY STANDARDS AND SPECIFICATIONS. NVIDIA MAKES NO WARRANTIES, EXPRESSED, IMPLIED, STATUTORY OR OTHERWISE WITH RESPECT TO THE MATERIALS OR OTHERWISE, AND EXPRESSLY DISCLAIMS ALL IMPLIED WARRANTIES INCLUDING, WITHOUT LIMITATION, THE WARRANTIES OF DESIGN, OF NONINFRINGEMENT, MERCHANTABILITY OR FITNESS FOR A PARTICULAR PURPOSE, OR ARISING FROM A COURSE OF DEALING, TRADE USAGE, TRADE PRACTICE, OR INDUSTRY STANDARDS.

GIGABYTE

Title
SEQ: 5V, 1V8, 3V3_SEQ, DDC_5V, DP_AUX_PROT
Size Custom
Document Number GV-N3070AORUS M-8GD
Rev 1.0
Date: Tuesday, September 08, 2020

Page48: SEQ:NVVDD, PEX, FBVDDQ ENABLE

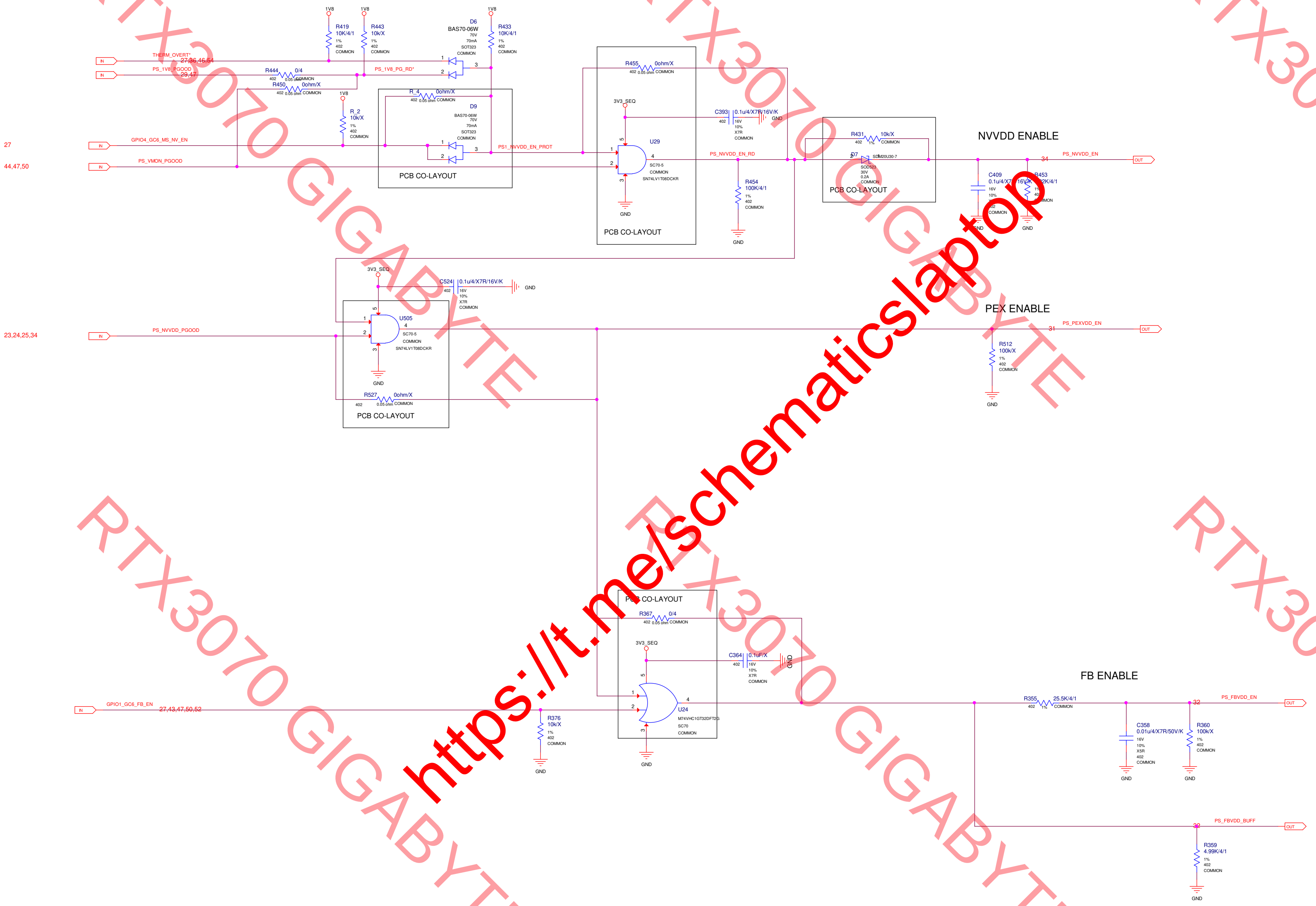
1V8
R419
10K/4/1
1%
402
COMMON
1V8
R443
10k/X
1%
402
COMMON
D6
BAS70-06W
70V
70mA
SOT323
COMMON
1V8
R433
10K/4/1
1%
402
COMMON
IN
THERM_OVERT*
27,36,46,54
IN
PS_1V8_PGOOD
29,47
R444 0/4
402 0.05 ohm COMMON
R450 0ohm/X
402 0.05 ohm COMMON
PS_1V8_PG_RD*
1V8
R_2
10k/X
1%
402
COMMON
R_4 0ohm/X
402 0.05 ohm COMMON
D9
BAS70-06W
70V
70mA
SOT323
COMMON
27
IN
GPIO4_GC6_MS_NV_EN
44,47,50
IN
PS_VMON_PGOOD
PS1_NVVDD_EN_PROT
PCB CO-LAYOUT
R455 0ohm/X
402 0.05 ohm COMMON
3V3_SEQ
C393 0.1u/4/X7R/16V/K
402
16V
10%
X7R
COMMON
GND
U29
SC70-5
COMMON
SN74LV1T08DCKR
GND
PCB CO-LAYOUT
PS_NVVDD_EN_RD
R454
100K/4/1
1%
402
COMMON
GND
R431 10k/X
402 1% COMMON
D7
SDM20U30-7
SOD523
30V
0.2A
COMMON
PCB CO-LAYOUT
NVVDD ENABLE
34
PS_NVVDD_EN
OUT
C409
0.1u/4/X7R/16V/K
16V
10%
402
COMMON
GND
R453
2K/4/1
1%
402
COMMON
GND
3V3_SEQ
C524 0.1u/4/X7R/16V/K
402
16V
10%
X7R
COMMON
GND
U505
SC70-5
COMMON
SN74LV1T08DCKR
23,24,25,34
IN
PS_NVVDD_PGOOD
GND
R527 0ohm/X
402 0.05 ohm COMMON
PCB CO-LAYOUT
PEX ENABLE
31
PS_PEXVDD_EN
OUT
R512
100k/X
1%
402
COMMON
GND
PCB CO-LAYOUT
R367 0/4
402 0.05 ohm COMMON
3V3_SEQ
C364 0.1uF/X
402
16V
10%
X7R
COMMON
GND
U24
M74VHC1GT32DFT2G
SC70
COMMON
GND
IN
GPIO1_GC6_FB_EN
27,43,47,50,52
R376
10k/X
1%
402
COMMON
GND
FB ENABLE
R355 25.5K/4/1
402 1% COMMON
32
PS_FBVDD_EN
OUT
C358
0.01u/4/X7R/50V/K
16V
10%
X5R
402
COMMON
GND
R360
100k/X
1%
402
COMMON
GND
32
PS_FBVDD_BUFF
OUT
R359
4.99K/4/1
1%
402
COMMON
GND

ASSEMBLY <ASSEMBLY_DESCRIPTION>
PAGE DETAIL SEQ: NVVDD, PEX, FBVDDQ ENABLE

ALL NVIDIA DESIGN SPECIFICATIONS, REFERENCE SPECIFICATIONS, REFERENCE BOARDS, FILES, DRAWINGS, DIAGNOSTICS, LISTS AND OTHER DOCUMENTS OR INFORMATION (TOGETHER AND SEPARATELY, 'MATERIALS') ARE BEING PROVIDED 'AS IS'. THE MATERIALS MAY CONTAIN KNOWN AND UNKNOWN VIOLATIONS OR DEVIATIONS OF INDUSTRY STANDARDS AND SPECIFICATIONS. NVIDIA MAKES NO WARRANTIES, EXPRESSED, IMPLIED, STATUTORY OR OTHERWISE WITH RESPECT TO THE MATERIALS OR OTHERWISE, AND EXPRESSLY DISCLAIMS ALL IMPLIED WARRANTIES INCLUDING, WITHOUT LIMITATION, THE WARRANTIES OF DESIGN, OF NONINFRINGEMENT, MERCHANTABILITY OR FITNESS FOR A PARTICULAR PURPOSE, OR ARISING FROM A COURSE OF DEALING, TRADE USAGE, TRADE PRACTICE, OR INDUSTRY STANDARDS.

GIGABYTE

Title
SEQ:NVVDD, PEX, FBVDDQ ENABLE
Size Custom
Document Number GV-N3070AORUS M-8GD
Rev 1.0
Date: Tuesday, September 08, 2020
Sheet 48 of 57

Page49: SEQ:MISC

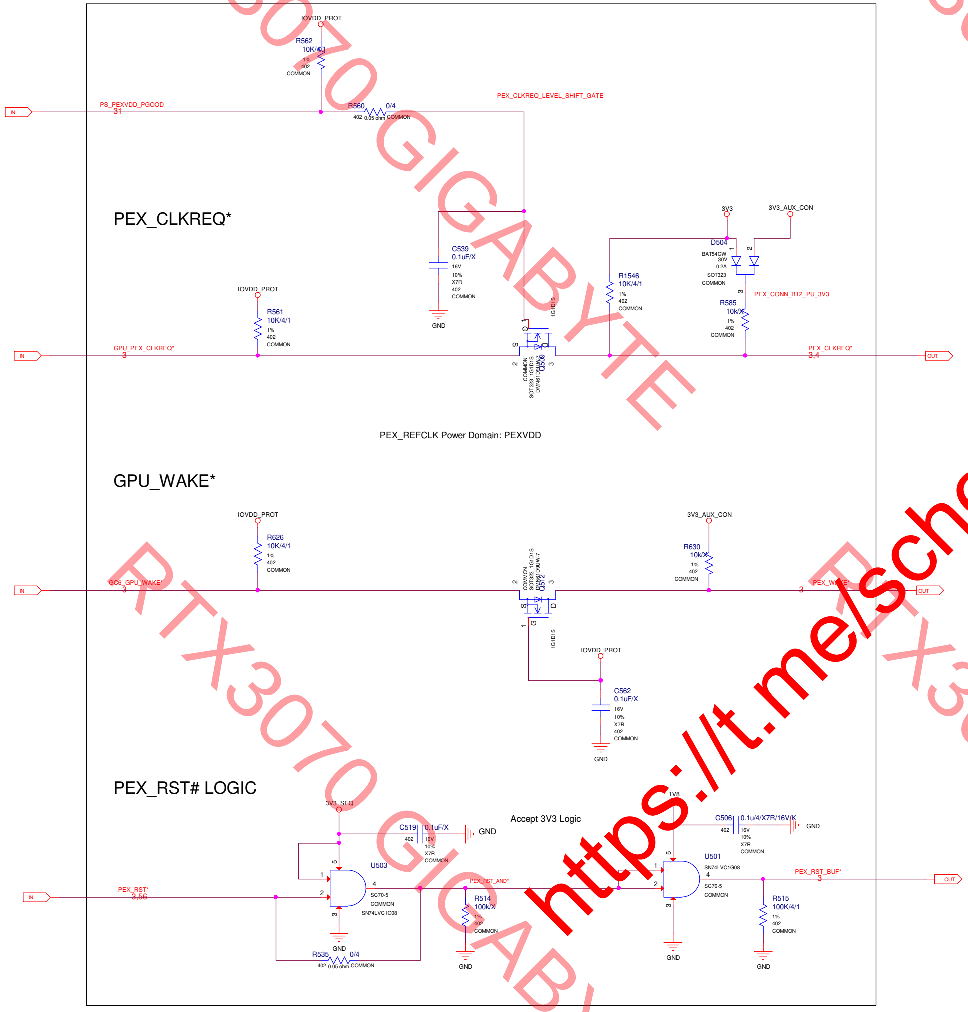
PEX_CLKREQ*
IOVDD_PROT
R562
10K/4/1
1%
402
COMMON
IN
PS_PEXVDD_PGOOD
31
R560
0/4
402 0.05 ohm COMMON
PEX_CLKREQ_LEVEL_SHIFT_GATE
C539
0.1uF/X
16V
10%
X7R
402
COMMON
GND
IOVDD_PROT
R561
10K/4/1
1%
402
COMMON
IN
GPU_PEX_CLKREQ*
3
Q509
DMN61D9UW-7
SOT323_1G1D1S
COMMON
1G1D1S
G
S
D
1
2
3
R1546
10K/4/1
1%
402
COMMON
3V3
3V3_AUX_CON
D504
BAT54CW
30V
0.2A
SOT323
COMMON
1
2
3
PEX_CONN_B12_PU_3V3
R585
10k/X
1%
402
COMMON
PEX_CLKREQ*
3,4
OUT
PEX_REFCLK Power Domain: PEXVDD
GPU_WAKE*
IOVDD_PROT
R626
10K/4/1
1%
402
COMMON
IN
GC6_GPU_WAKE*
3
Q512
DMN61D9UW-7
SOT323_1G1D1S
COMMON
1G1D1S
S
G
D
1
2
3
3V3_AUX_CON
R630
10k/X
1%
402
COMMON
PEX_WAKE*
3
OUT
IOVDD_PROT
C562
0.1uF/X
16V
10%
X7R
402
COMMON
GND
PEX_RST# LOGIC
3V3_SEQ
C519
0.1uF/X
402
16V
10%
X7R
COMMON
GND
U503
SC70-5
COMMON
SN74LVC1G08
1
2
3
4
5
IN
PEX_RST*
3,56
R535
0/4
402 0.05 ohm COMMON
GND
PEX_RST_AND*
R514
100k/X
1%
402
COMMON
GND
Accept 3V3 Logic
1V8
C506
0.1u/4/X7R/16V/K
402
16V
10%
X7R
COMMON
GND
U501
SN74LVC1G08
SC70-5
COMMON
1
2
3
4
5
GND
PEX_RST_BUF*
3
OUT
R515
100K/4/1
1%
402
COMMON
GND

ASSEMBLY
PAGE DETAIL

<ASSEMBLY_DESCRIPTION>
SEQ: MISC

ALL NVIDIA DESIGN SPECIFICATIONS, REFERENCE SPECIFICATIONS, REFERENCE BOARDS, FILES, DRAWINGS, DIAGNOSTICS, LISTS AND OTHER DOCUMENTS OR INFORMATION (TOGETHER AND SEPARATELY, 'MATERIALS') ARE BEING PROVIDED 'AS IS'. THE MATERIALS MAY CONTAIN KNOWN AND UNKNOWN VIOLATIONS OR DEVIATIONS OF INDUSTRY STANDARDS AND SPECIFICATIONS. NVIDIA MAKES NO WARRANTIES, EXPRESSED, IMPLIED, STATUTORY OR OTHERWISE WITH RESPECT TO THE MATERIALS OR OTHERWISE, AND EXPRESSLY DISCLAIMS ALL IMPLIED WARRANTIES INCLUDING, WITHOUT LIMITATION, THE WARRANTIES OF DESIGN, OF NONINFRINGEMENT, MERCHANTABILITY OR FITNESS FOR A PARTICULAR PURPOSE, OR ARISING FROM A COURSE OF DEALING, TRADE USAGE, TRADE PRACTICE, OR INDUSTRY STANDARDS.

GIGABYTE

Title
SEQ:MISC

Size Custom
Document Number GV-N3070AORUS M-8GD
Rev 1.0

Date: Tuesday, September 08, 2020

Page 50: SEQUENCE:Voltage Monitor

3V3PEX Voltage Monitor

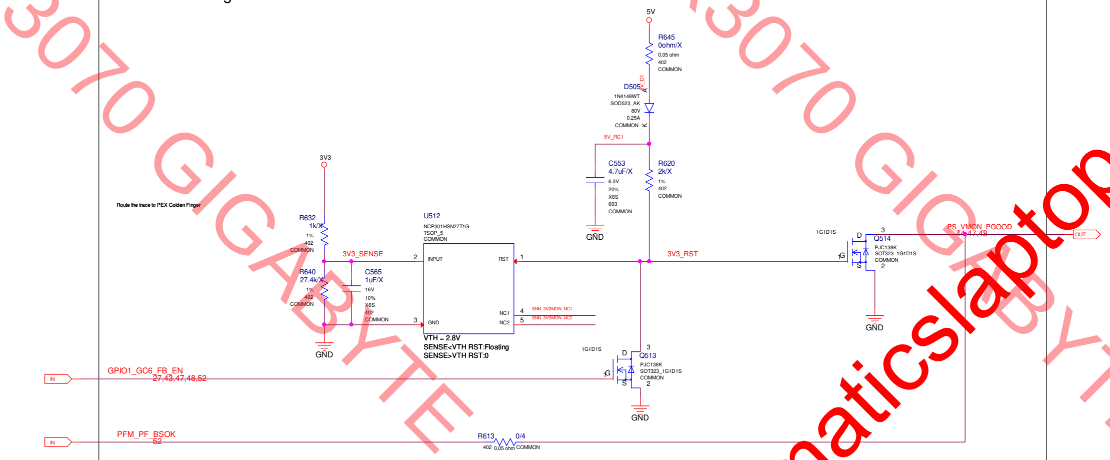
5V
R645
0ohm/X
0.05 ohm
402
COMMON
5V_D1
D505
A
1N4148WT
SOD523_AK
80V
0.25A
COMMON
K
5V_RC1
C553
4.7uF/X
6.3V
20%
X6S
603
COMMON
GND
R620
2k/X
1%
402
COMMON
3V3
Route the trace to PEX Golden Finger
R632
1k/X
1%
402
COMMON
3V3_SENSE
U512
NCP301HSN27T1G
TSOP_5
COMMON
2
INPUT
RST
1
3V3_RST
R640
27.4k/X
1%
402
COMMON
C565
1uF/X
16V
10%
X6S
402
COMMON
3
GND
NC1
NC2
4
5
SNN_3V3MON_NC1
SNN_3V3MON_NC2
GND
VTH = 2.8V
SENSE<VTH RST:Floating
SENSE>VTH RST:0
1G1D1S
D
3
Q514
G
S
PJC138K
SOT323_1G1D1S
COMMON
2
GND
PS_VMON_PGOOD
44,47,48
OUT
1G1D1S
D
3
Q513
G
S
PJC138K
SOT323_1G1D1S
COMMON
2
GND
IN
GPIO1_GC6_FB_EN
27,43,47,48,52
IN
PFM_PF_BSOK
52
R613
0/4
402
0.05 ohm
COMMON

BOM Configuration

OPTIONS	PEX3V3_SENSE	PEX12V_SENSE	OTHER_12V_SENSE
Use Pre-Filter	Pre-Filter	Pre-Filter	Pre-Filter
NO Pre-Filter	Voltage_Monitor	Voltage_Monitor	N/A

Signal	Direction	Function
3V3	INPUT	Sense the 3V3 Voltage from PCIE golden finger
12V	INPUT	Sense the 12V Voltage from PCIE golden finger
PS_VMON_PGOOD	OPEN-DRAIN	Floating(H) once both 3V3 and 12V reach Vth
GC6_FB_EN	INPUT	Indicator for RTD3/GC6 residence,Use to Mask the VMON_PGOOD
PS_PF_SKIP	INPUT	From INA3221(VPU) or Pre-filter(SKIP)
PS_PF_BSOK	INPUT	From INA3221(PV) or Pre-filter(BS_OK)

ASSEMBLY
PAGE DETAIL

<ASSEMBLY_DESCRIPTION>
SEQ: VOLTAGE MONITOR

ALL NVIDIA DESIGN SPECIFICATIONS, REFERENCE SPECIFICATIONS, REFERENCE BOARDS, FILES, DRAWINGS, DIAGNOSTICS, LISTS AND OTHER DOCUMENTS OR INFORMATION (TOGETHER AND SEPARATELY, 'MATERIALS') ARE BEING PROVIDED 'AS IS'. THE MATERIALS MAY CONTAIN KNOWN AND UNKNOWN VIOLATIONS OR DEVIATIONS OF INDUSTRY STANDARDS AND SPECIFICATIONS. NVIDIA MAKES NO WARRANTIES, EXPRESSED, IMPLIED, STATUTORY OR OTHERWISE WITH RESPECT TO THE MATERIALS OR OTHERWISE, AND EXPRESSLY DISCLAIMS ALL IMPLIED WARRANTIES INCLUDING, WITHOUT LIMITATION, THE WARRANTIES OF DESIGN, OF NONINFRINGEMENT, MERCHANTABILITY OR FITNESS FOR A PARTICULAR PURPOSE, OR ARISING FROM A COURSE OF DEALING, TRADE USAGE, TRADE PRACTICE, OR INDUSTRY STANDARDS.

GIGABYTE
Title
SEQUENCE:Voltage Monitor
Size Custom
Document Number GV-N3070AORUS M-8GD
Rev 1.0
Date: Tuesday, August 04, 2020
Sheet 50 of 57

Page51: FAN&LED

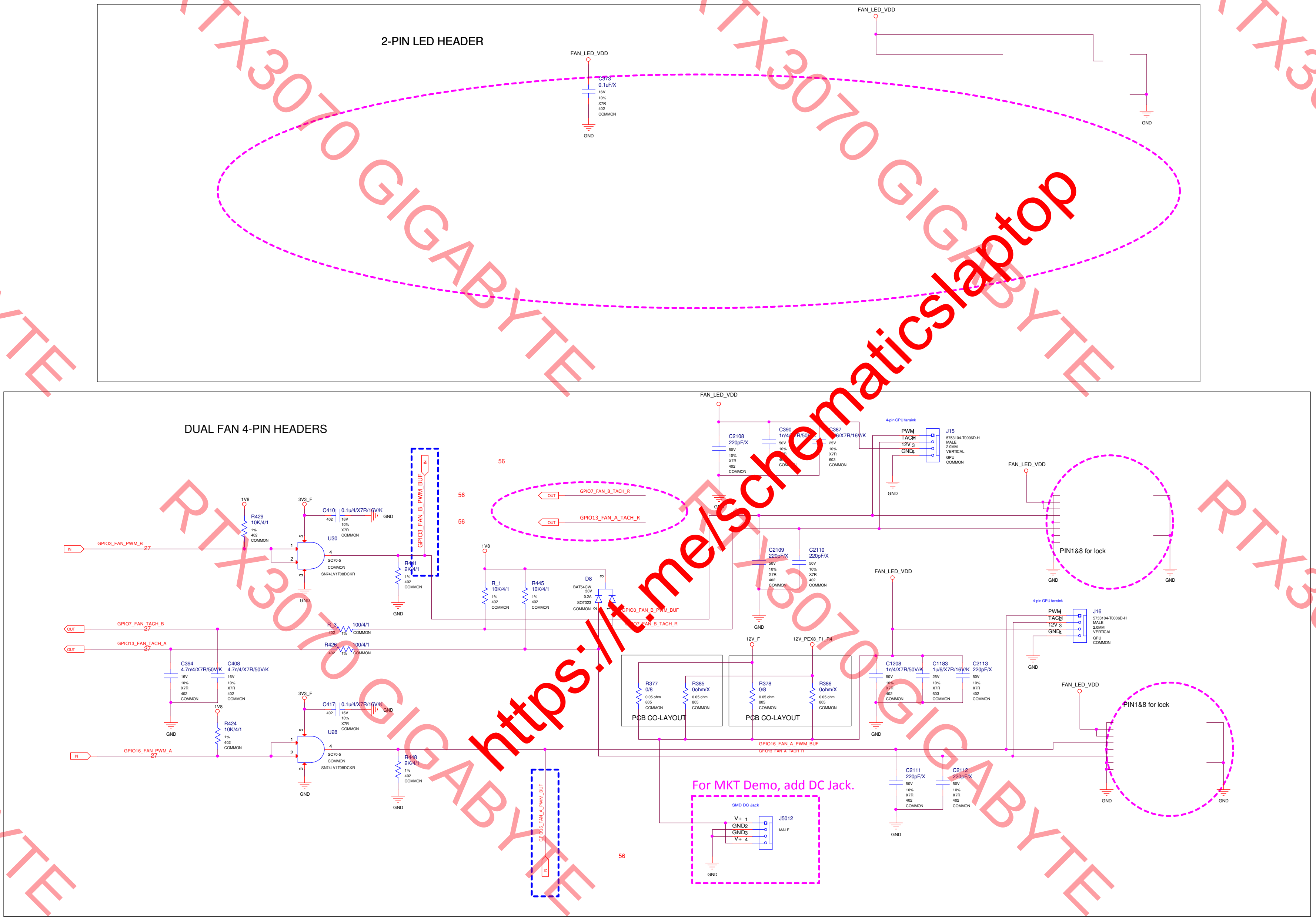

2-PIN LED HEADER
FAN_LED_VDD
C373
0.1uF/X
16V
10%
X7R
402
COMMON
GND
DUAL FAN 4-PIN HEADERS
GPIO3_FAN_B_PWM_BUF
56
GPIO7_FAN_B_TACH_R
GPIO13_FAN_A_TACH_R
OUT
IN
1V8
3V3_F
R429
10K/4/1
1%
402
COMMON
C410
0.1u/4/X7R/16V/K
U30
SC70-5
SN74LV1T08DCKR
GPIO3_FAN_PWM_B
27
R441
2K/4/1
R_1
10K/4/1
R445
10K/4/1
D8
BAT54CW
30V
0.2A
SOT323
GPIO7_FAN_B_TACH_B
GPIO13_FAN_TACH_A
R_3
100/4/1
R426
100/4/1
C394
4.7n/4/X7R/50V/K
C408
4.7n/4/X7R/50V/K
R424
10K/4/1
C417
0.1u/4/X7R/16V/K
U28
GPIO16_FAN_PWM_A
R448
2K/4/1
GPIO16_FAN_A_PWM_BUF
GPIO13_FAN_A_TACH_R
C2108
220pF/X
50V
C390
1n/4/X7R/50V/K
C387
1u/6/X7R/16V/K
25V
603
4-pin GPU fansink
PWM
TACH
12V
GND
J15
5753104-T0006D-H
MALE
2.0MM
VERTICAL
GPU
C2109
220pF/X
C2110
220pF/X
PIN1&8 for lock
J16
12V_F
12V_PEX8_F1_R4
R377
0/8
0.05 ohm
805
R385
0ohm/X
R378
0/8
R386
0ohm/X
PCB CO-LAYOUT
PCB CO-LAYOUT
C1208
1n/4/X7R/50V/K
C1183
1u/6/X7R/16V/K
C2113
220pF/X
C2111
220pF/X
C2112
220pF/X
For MKT Demo, add DC Jack.
SMD DC Jack
V+
GND
GND
V+
J5012
MALE

ASSEMBLY	<ASSEMBLY_DESCRIPTION>
PAGE DETAIL	FAN & LED

ALL NVIDIA DESIGN SPECIFICATIONS, REFERENCE SPECIFICATIONS, REFERENCE BOARDS, FILES, DRAWINGS, DIAGNOSTICS, LISTS AND OTHER DOCUMENTS OR INFORMATION (TOGETHER AND SEPARATELY, 'MATERIALS') ARE BEING PROVIDED 'AS IS'. THE MATERIALS MAY CONTAIN KNOWN AND UNKNOWN VIOLATIONS OR DEVIATIONS OF INDUSTRY STANDARDS AND SPECIFICATIONS. NVIDIA MAKES NO WARRANTIES, EXPRESSED, IMPLIED, STATUTORY OR OTHERWISE WITH RESPECT TO THE MATERIALS OR OTHERWISE, AND EXPRESSLY DISCLAIMS ALL IMPLIED WARRANTIES INCLUDING, WITHOUT LIMITATION, THE WARRANTIES OF DESIGN, OF NONINFRINGEMENT, MERCHANTABILITY OR FITNESS FOR A PARTICULAR PURPOSE, OR ARISING FROM A COURSE OF DEALING, TRADE USAGE, TRADE PRACTICE, OR INDUSTRY STANDARDS.

GIGABYTE

Title
FAN&LED
Size: Custom
Document Number: GV-N3070AORUS M-8GD
Rev: 1.0
Date: Tuesday, September 08, 2020
Sheet 51 of 57

Page52: OVRM_PWR SENSE

MODE PIN STATUS	MULTIPLEXER OPERATION
LOW	DEVICE A
TRI-STATE(FLOATING)	STAND-ALONE
HIGH	DEVICE B

ENABLE PIN STATUS	MULTIPLEXER OPERATION
LOW	FULLY FUNCTIONAL
TRI-STATE(FLOATING)	LIMITTED FUNCTION
HIGH	STANDBY

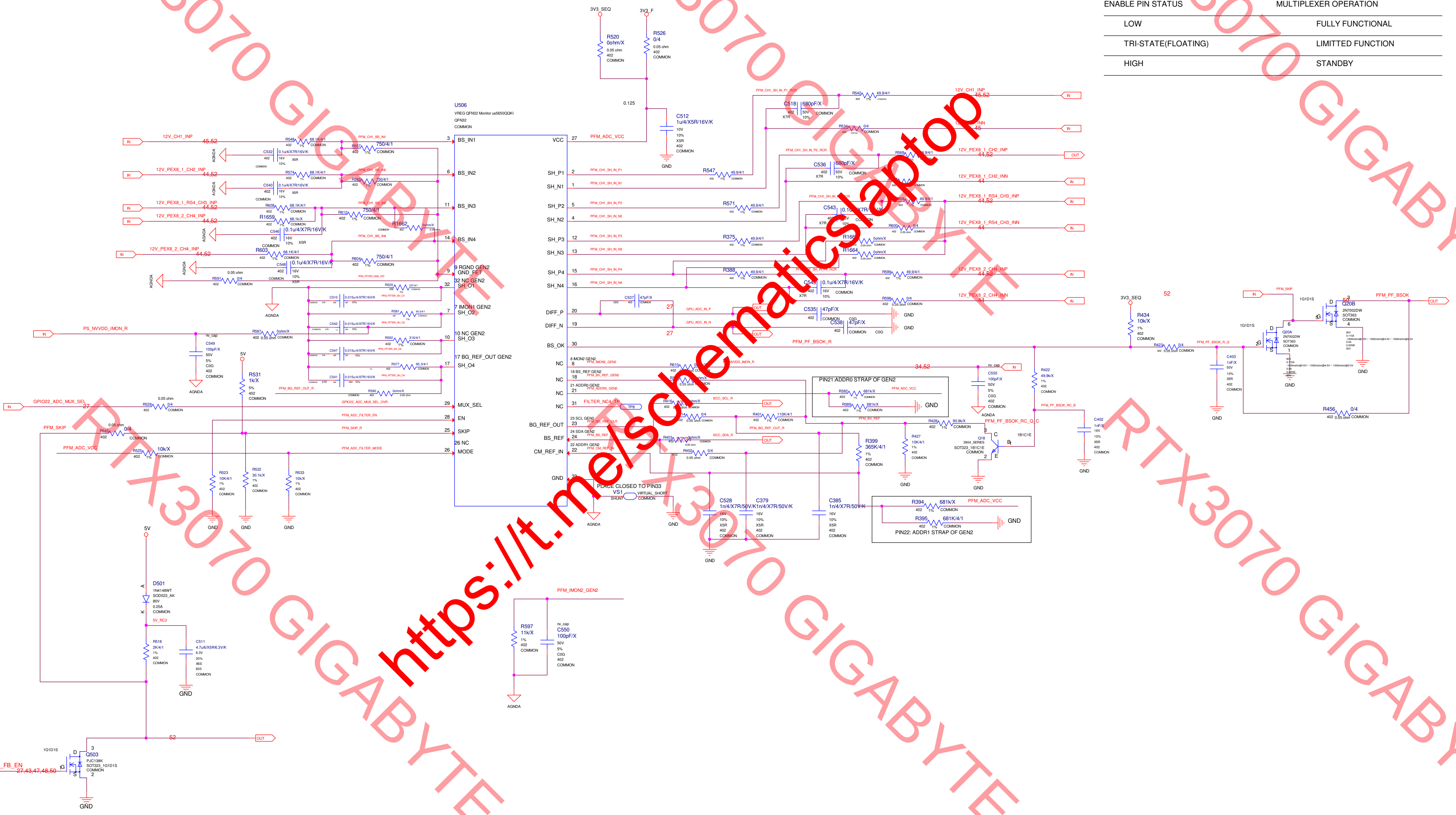
U506
VREG QFN32 Monitor us5650QQKI
QFN32
COMMON
3 BS_IN1
6 BS_IN2
11 BS_IN3
14 BS_IN4
9 RGND GEN2 GND_FET
32 NC GEN2 SH_O1
7 IMON1 GEN2 SH_O2
10 NC GEN2 SH_O3
17 BG_REF_OUT GEN2 SH_O4
29 MUX_SEL
28 EN
25 SKIP
26 NC MODE
VCC 27
SH_P1 2
SH_N1 1
SH_P2 5
SH_N2 4
SH_P3 12
SH_N3 13
SH_P4 15
SH_N4 16
DIFF_P 20
DIFF_N 19
BS_OK 30
NC 8 IMON2 GEN2
NC 18 BS_REF GEN2
NC 21 ADDR0 GEN2
NC 31
BG_REF_OUT 23 SCL GEN2
BS_REF 24 SDA GEN2
CM_REF_IN 22 ADDR1 GEN2
GND 33
3V3_SEQ
3V3_F
R520 0ohm/X
R526 0/4
0.125
C512 1u/4/X5R/16V/K
PFM_ADC_VCC
12V_CH1_INP 45,52
12V_PEX8_1_CH2_INP 44,52
12V_PEX8_1_RS4_CH3_INP 44,52
12V_PEX8_2_CH4_INP 44,52
12V_CH1_INN 45
12V_PEX8_1_CH2_INN 44
12V_PEX8_1_RS4_CH3_INN 44
12V_PEX8_2_CH4_INN 44
PFM_CH1_BS_IN1
PFM_CH1_BS_IN2
PFM_CH1_BS_IN3
PFM_CH1_BS_IN4
PFM_FITTER_GND_FET
PFM_FITTER_SH_O1
PFM_FITTER_SH_O2
PFM_FITTER_SH_O3
PFM_FITTER_SH_O4
PFM_BG_REF_OUT_R
PS_NVVDD_IMON_R 34,52
GPIO22_ADC_MUX_SEL 27
GPIO22_ADC_MUX_SEL_OVR
PFM_ADC_FILTER_EN
PFM_SKIP
PFM_SKIP_R
PFM_ADC_FILTER_MODE
PFM_CH1_SH_IN_P1_RCR
PFM_CH1_SH_IN_P2_RCR
PFM_CH1_SH_IN_P4_RCR
GPU_ADC_IN_P 27
GPU_ADC_IN_N 27
PFM_PF_BSOK_R
PFM_IMON2_GEN2
PFM_BV_REF_GEN2
PFM_ADDR0_GEN2
FILTER_NC4_TP
TP8
I2CC_SCL_R
I2CC_SDA_R
PFM_BG_REF_OUT
PFM_BS_REF
PFM_CM_REF_IN
PFM_BG_REF_OUT_R
PFM_BV_REF
PIN21:ADDR0 STRAP OF GEN2
R382 681k/X
R389 681k/X
PIN22: ADDR1 STRAP OF GEN2
R394 681k/X
R395 681K/4/1
PLACE CLOSED TO PIN33
VS1 VIRTUAL_SHORT
C528 1n/4/X7R/50V/K
C379 1n/4/X7R/50V/K
C385 1n/4/X7R/50V/K
R399 365K/4/1
PFM_PF_BSOK_RC_Q_C
PFM_PF_BSOK_RC_B
Q18 3904_SERIES SOT323_1B1C1E
R422 49.9k/X
C402 1nF/X
3V3_SEQ 52
R434 10k/X
R423 0/4
PFM_PF_BSOK_R_Q
C403 1nF/X
Q20A 2N7002DW SOT363
Q20B 2N7002DW SOT363
PFM_PF_BSOK
R456 0/4
5V
R531 1k/X
R523 10K/4/1
R532 30.1k/X
R533 10k/X
D501 1N4148WT SOD523_AK
5V_RC2
R518 2K/4/1
C511 4.7u/6/X5R/6.3V/K
52
Q503 PJC138K SOT323_1G1D1S
GPIO1_GC6_FB_EN 27,43,47,48,50
R597 11k/X
C550 100pF/X
AGNDA
GND
IN
OUT

ASSEMBLY <ASSEMBLY_DESCRIPTION>
PAGE DETAIL PS:OVRM_PWR_SENSE

ALL NVIDIA DESIGN SPECIFICATIONS, REFERENCE SPECIFICATIONS, REFERENCE BOARDS, FILES, DRAWINGS, DIAGNOSTICS, LISTS AND OTHER DOCUMENTS OR INFORMATION (TOGETHER AND SEPARATELY, 'MATERIALS') ARE BEING PROVIDED 'AS IS'. THE MATERIALS MAY CONTAIN KNOWN AND UNKNOWN VIOLATIONS OR DEVIATIONS OF INDUSTRY STANDARDS AND SPECIFICATIONS. NVIDIA MAKES NO WARRANTIES, EXPRESSED, IMPLIED, STATUTORY OR OTHERWISE WITH RESPECT TO THE MATERIALS OR OTHERWISE, AND EXPRESSLY DISCLAIMS ALL IMPLIED WARRANTIES INCLUDING, WITHOUT LIMITATION, THE WARRANTIES OF DESIGN, OF NONINFRINGEMENT, MERCHANTABILITY OR FITNESS FOR A PARTICULAR PURPOSE, OR ARISING FROM A COURSE OF DEALING, TRADE USAGE, TRADE PRACTICE, OR INDUSTRY STANDARDS.

GIGABYTE

Title: OVRM_PWR SENSE

Size: Custom
Document Number: GV-N3070AORUS M-8GD
Rev: 1.0
Date: Tuesday, September 08, 2020
Sheet 52 of 57

Page53: MECH

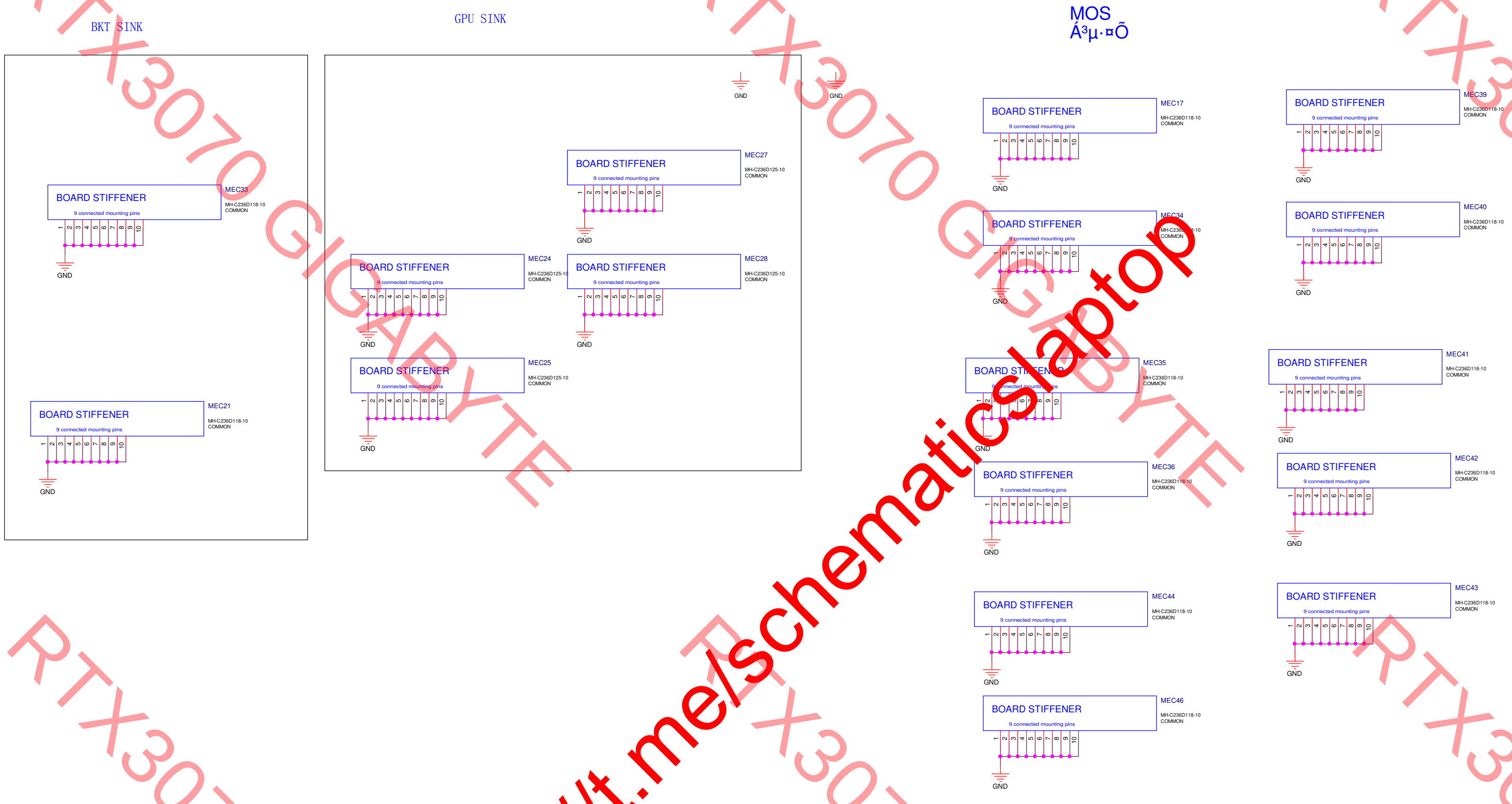
BKT SINK
GPU SINK
MOS
Á³µ·¤Õ
BOARD STIFFENER
9 connected mounting pins
MEC33
MH-C236D118-10
COMMON
MEC21
MH-C236D118-10
COMMON
MEC27
MH-C236D125-10
COMMON
MEC24
MH-C236D125-10
COMMON
MEC28
MH-C236D125-10
COMMON
MEC25
MH-C236D125-10
COMMON
MEC17
MH-C236D118-10
COMMON
MEC34
MEC35
MH-C236D118-10
COMMON
MEC36
MH-C236D118-10
COMMON
MEC44
MH-C236D118-10
COMMON
MEC46
MH-C236D118-10
COMMON
MEC39
MH-C236D118-10
COMMON
MEC40
MH-C236D118-10
COMMON
MEC41
MH-C236D118-10
COMMON
MEC42
MH-C236D118-10
COMMON
MEC43
MH-C236D118-10
COMMON
1 2 3 4 5 6 7 8 9 10
GND

ASSEMBLY <ASSEMBLY_DESCRIPTION>
PAGE DETAIL MECH

ALL NVIDIA DESIGN SPECIFICATIONS, REFERENCE SPECIFICATIONS, REFERENCE BOARDS, FILES, DRAWINGS, DIAGNOSTICS, LISTS AND OTHER DOCUMENTS OR INFORMATION (TOGETHER AND SEPARATELY, 'MATERIALS') ARE BEING PROVIDED 'AS IS'. THE MATERIALS MAY CONTAIN KNOWN AND UNKNOWN VIOLATIONS OR DEVIATIONS OF INDUSTRY STANDARDS AND SPECIFICATIONS. NVIDIA MAKES NO WARRANTIES, EXPRESSED, IMPLIED, STATUTORY OR OTHERWISE WITH RESPECT TO THE MATERIALS OR OTHERWISE, AND EXPRESSLY DISCLAIMS ALL IMPLIED WARRANTIES INCLUDING, WITHOUT LIMITATION, THE WARRANTIES OF DESIGN, OF NONINFRINGEMENT, MERCHANTABILITY OR FITNESS FOR A PARTICULAR PURPOSE, OR ARISING FROM A COURSE OF DEALING, TRADE USAGE, TRADE PRACTICE, OR INDUSTRY STANDARDS.

GIGABYTE

Title
MECH

Size Custom
Document Number GV-N3070AORUS M-8GD
Rev 1.0
Date: Tuesday, July 21, 2020
Sheet 53 of 57

RTX3070 GIGABYTE RTX3070 GIGABYTE RTX3070 GIGABYTE BYTE

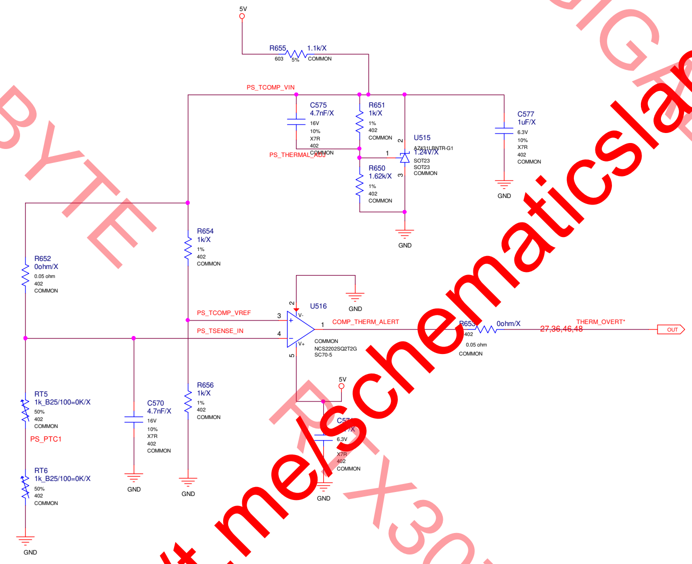
5V
R655
1.1k/X
603
5%
COMMON
PS_TCOMP_VIN
C575
4.7nF/X
16V
10%
X7R
402
COMMON
PS_THERMAL_ADJ
R651
1k/X
1%
402
COMMON
R650
1.62k/X
1%
402
COMMON
U515
AZ431LBNTR-G1
1.24V/X
SOT23
SOT23
COMMON
1
2
3
GND
C577
1uF/X
6.3V
10%
X7R
402
COMMON
GND
R654
1k/X
1%
402
COMMON
R652
0ohm/X
0.05 ohm
402
COMMON
U516
GND
PS_TCOMP_VREF
PS_TSENSE_IN
3
4
2
5
1
V-
V+
COMMON
NCS2202SQ2T2G
SC70-5
COMP_THERM_ALERT
R653
0ohm/X
402
0.05 ohm
COMMON
THERM_OVERT*
27,36,46,48
OUT
RT5
1k_B25/100=0K/X
50%
402
COMMON
PS_PTC1
RT6
1k_B25/100=0K/X
50%
402
COMMON
GND
C570
4.7nF/X
16V
10%
X7R
402
COMMON
GND
R656
1k/X
1%
402
COMMON
GND
5V
C57
6.3V
X7R
402
COMMON
GND

Close to FBVDD MOS

ASSEMBLY <ASSEMBLY_DESCRIPTION>
PAGE DETAIL PTC

ALL NVIDIA DESIGN SPECIFICATIONS, REFERENCE SPECIFICATIONS, REFERENCE BOARDS, FILES, DRAWINGS, DIAGNOSTICS, LISTS AND OTHER DOCUMENTS OR INFORMATION (TOGETHER AND SEPARATELY, 'MATERIALS') ARE BEING PROVIDED 'AS IS'. THE MATERIALS MAY CONTAIN KNOWN AND UNKNOWN VIOLATIONS OR DEVIATIONS OF INDUSTRY STANDARDS AND SPECIFICATIONS. NVIDIA MAKES NO WARRANTIES, EXPRESSED, IMPLIED, STATUTORY OR OTHERWISE WITH RESPECT TO THE MATERIALS OR OTHERWISE, AND EXPRESSLY DISCLAIMS ALL IMPLIED WARRANTIES INCLUDING, WITHOUT LIMITATION, THE WARRANTIES OF DESIGN, OF NONINFRINGEMENT, MERCHANTABILITY OR FITNESS FOR A PARTICULAR PURPOSE, OR ARISING FROM A COURSE OF DEALING, TRADE USAGE, TRADE PRACTICE, OR INDUSTRY STANDARDS.

GIGABYTE

Title
PTC

Size Custom
Document Number GV-N3070AORUS M-8GD
Rev 1.0

Date: Tuesday, July 21, 2020
Sheet 54 of 57

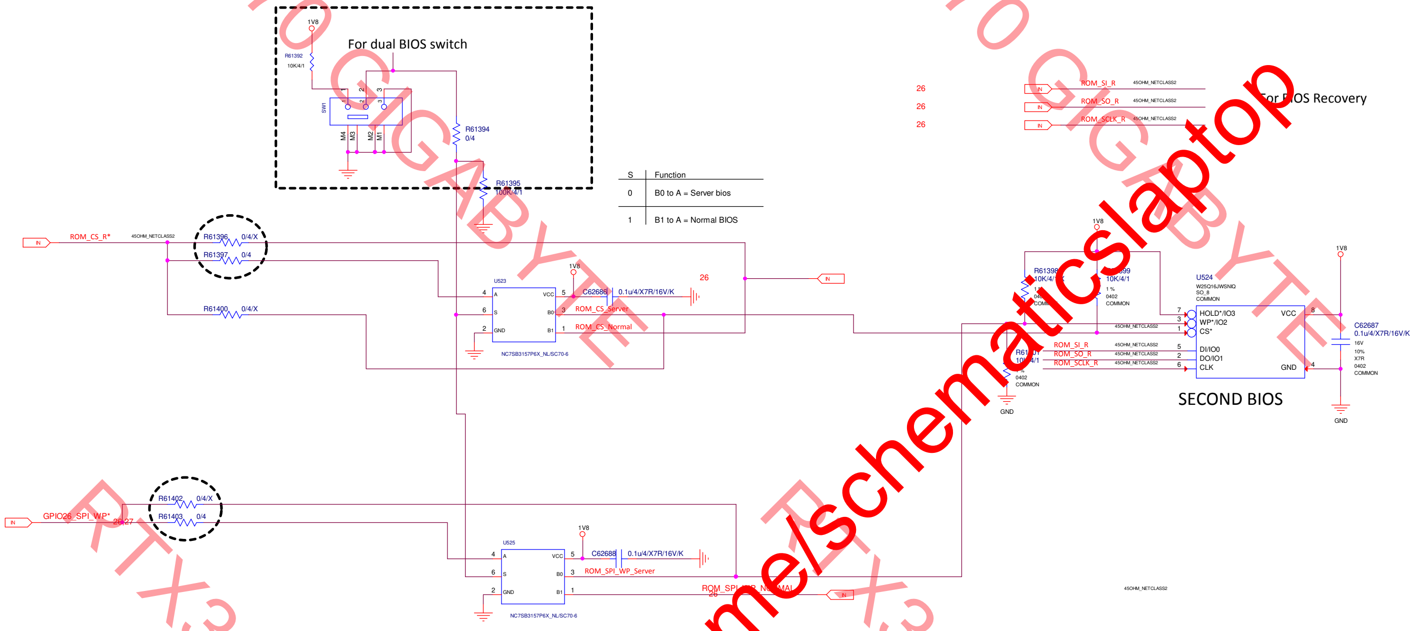
For dual BIOS switch
1V8
R61392
10K/4/1
SW1
1 2 3
M4 M3 M2 M1
R61394
0/4
R61395
100K/4/1
26
IN
ROM_CS_R*
45OHM_NETCLASS2
R61396 0/4/X
R61397 0/4
R61400 0/4/X
U523
A VCC
S B0
GND B1
4 6 2 5 3 1
1V8
C62686 0.1u/4/X7R/16V/K
26
ROM_CS_Server
ROM_CS_Normal
NC7SB3157P6X_NL/SC70-6
IN
26
26
26
IN ROM_SI_R 45OHM_NETCLASS2
IN ROM_SO_R 45OHM_NETCLASS2
IN ROM_SCLK_R 45OHM_NETCLASS2
For BIOS Recovery
1V8
R61398
10K/4/1
1 %
0402
COMMON
10K/4/1
1 %
0402
COMMON
R61401
10K/4/1
0402
COMMON
GND
U524
W25Q16JWSNIQ
SO_8
COMMON
HOLD*/IO3
WP*/IO2
CS*
DI/IO0
DO/IO1
CLK
VCC
GND
7 3 1 5 2 6 8 4
45OHM_NETCLASS2
ROM_SI_R 45OHM_NETCLASS2
ROM_SO_R 45OHM_NETCLASS2
ROM_SCLK_R 45OHM_NETCLASS2
1V8
C62687
0.1u/4/X7R/16V/K
16V
10%
X7R
0402
COMMON
GND
SECOND BIOS
IN
GPIO26_SPI_WP*
26,27
R61402 0/4/X
R61403 0/4
U525
A VCC
S B0
GND B1
4 6 2 5 3 1
1V8
C62688 0.1u/4/X7R/16V/K
ROM_SPI_WP_Server
ROM_SPI_WP_NORMAL
26
IN
NC7SB3157P6X_NL/SC70-6
45OHM_NETCLASS2

S	Function
0	B0 to A = Server bios
1	B1 to A = Normal BIOS

ASSEMBLY <ASSEMBLY_DESCRIPTION>
PAGE DETAIL BLANK

ALL NVIDIA DESIGN SPECIFICATIONS, REFERENCE SPECIFICATIONS, REFERENCE BOARDS, FILES, DRAWINGS, DIAGNOSTICS, LISTS AND OTHER DOCUMENTS OR INFORMATION (TOGETHER AND SEPARATELY, 'MATERIALS') ARE BEING PROVIDED 'AS IS'. THE MATERIALS MAY CONTAIN KNOWN AND UNKNOWN VIOLATIONS OR DEVIATIONS OF INDUSTRY STANDARDS AND SPECIFICATIONS. NVIDIA MAKES NO WARRANTIES, EXPRESSED, IMPLIED, STATUTORY OR OTHERWISE WITH RESPECT TO THE MATERIALS OR OTHERWISE, AND EXPRESSLY DISCLAIMS ALL IMPLIED WARRANTIES INCLUDING, WITHOUT LIMITATION, THE WARRANTIES OF DESIGN, OF NONINFRINGEMENT, MERCHANTABILITY OR FITNESS FOR A PARTICULAR PURPOSE, OR ARISING FROM A COURSE OF DEALING, TRADE USAGE, TRADE PRACTICE, OR INDUSTRY STANDARDS.

GIGABYTE
Title
DUAL BIOS
Size Custom
Document Number GV-N3070AORUS M-8GD
Rev 1.0
Date: Tuesday, September 08, 2020
Sheet 55 of 57

Page59: MCU HT32F52342

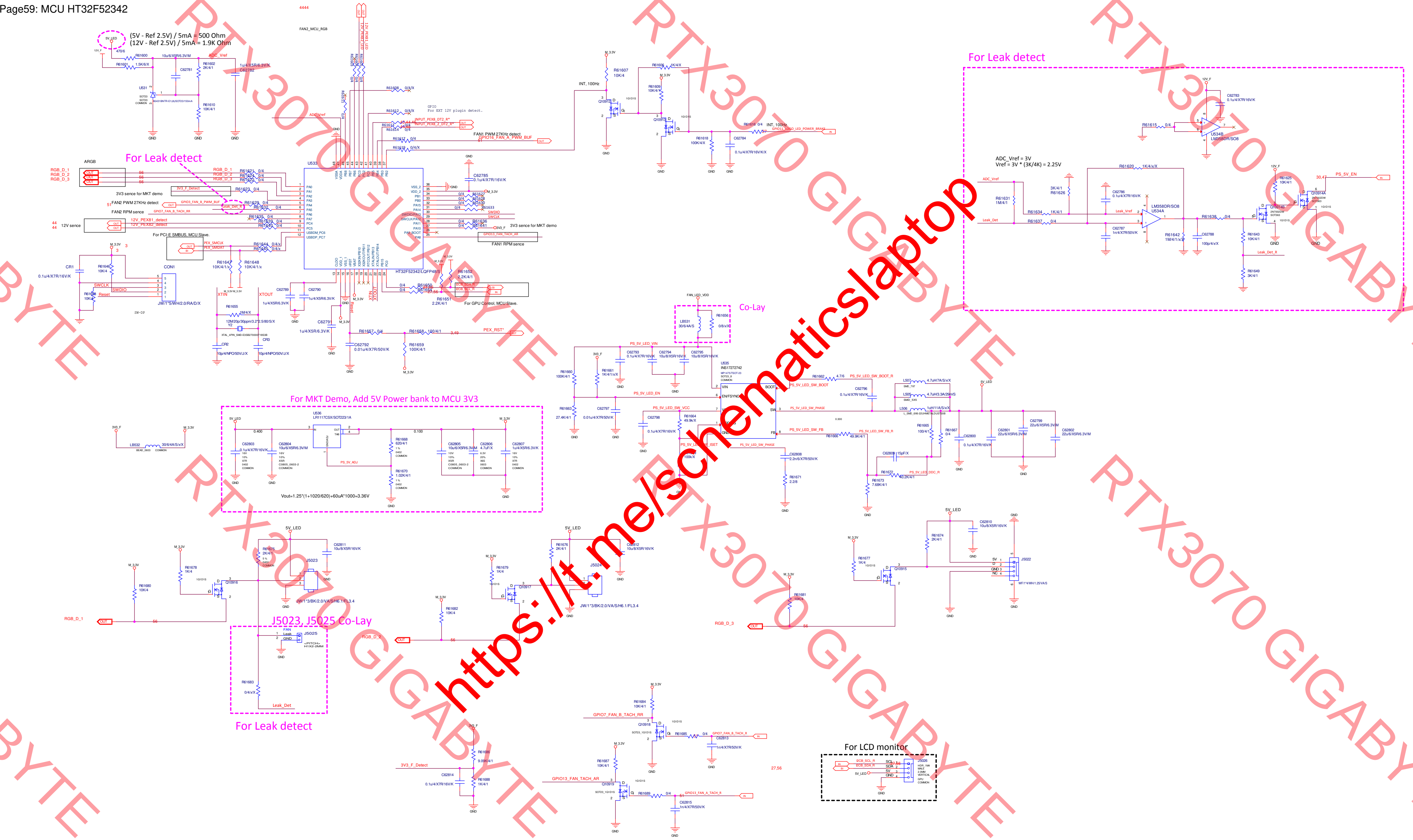
(5V - Ref 2.5V) / 5mA = 500 Ohm
(12V - Ref 2.5V) / 5mA = 1.9K Ohm
5V_LED
12V_F
470/6
R61600
R61601 1.5K/6/X
10u/6/X5R/6.3V/M
C62781
ADC_Vref
R61602 2K/4/1
1u/4/X5R/6.3V/K
C62782
U531
AS431BNTR-E1(A)/SOT23/150mA
R61610 10K/4/1
GND
4444
FAN2_MCU_RGB
12V_PEX81_LED
12V_PEX82_LED
R61603 0/4
R61604 0/4
R61605 0/4
R61611 0/4
R61608 0/4/X
R61612 0/4/X
GPIO
For EXT 12V plugin detect.
INPUT_PEX8_DT2_R*
INPUT_PEX8_2_DT2_R*
R61613 0/4
R61614 0/4
FAN1 PWM 27KHz detect
GPIO16_FAN_A_PWM_BUF
R61617 0/4
R61619 0/4/X
For Leak detect
ARGB
RGB_D_1
RGB_D_2
RGB_D_3
R61621 0/4
R61624 0/4
R61622 0/4
3V3_F_Detect
R61623 0/4
3V3 sence for MKT demo
FAN2 PWM 27KHz detect
GPIO3_FAN_B_PWM_BUF
Leak_Det_R
R61629 0/4
R61632 0/4
FAN2 RPM sence
GPIO7_FAN_B_TACH_RR
R61635 0/4
12V sence
12V_PEX81_detect
12V_PEX82_detect
R61639 0/4
R61640 0/4
For PCI-E SMBUS, MCU Slave.
PEX_SMCLK
PEX_SMDAT
R61644 0/4/x
R61645 0/4/x
R61647 10K/4/1/x
R61648 10K/4/1/x
U533
HT32F52342/LQFP48/S
PA0 PA1 PA2 PA3 PA4 PA5 PA6 PA7 PC4 PC5 USBDM_PC6 USBDP_PC7
VSSA VDDA PB8 PB7 PB6 PC3 PC2 PC1 PB5 PB4 PB3 PB2
VSS_2 VDD_2 PB1 PB0 PA15 PA14 SWDIO/PA13 SWCLK/PA12 PA11 PA10 PA9_BOOT PA8
CLDO VDD_1 VSS_1 nRST VBAT X32KIN/PB10 X32KOUT/PB11 RTCOUT/PB12 XTALIN/PB13 XTALOUT/PB14 PB15 PC0
C62785 0.1u/4/X7R/16V/K
M_3.3V
R61627 0/4
R61628 0/4
R61630 0/4
R61633 0/4
SWDIO
SWCLK
R61636 0/4
R61641 0/4
3V3_F
3V3 sence for MKT demo
GPIO13_FAN_TACH_AR
FAN1 RPM sence
R61652 2.2K/4/1
R61650 0/4
R61654 0/4
R61651 2.2K/4/1
I2CB_SDA_R
I2CB_SCL_R
For GPU Control, MCU Slave.
CR1 0.1u/4/X7R/16V/K
R61646 10K/4
CON1
SWCLK
SWDIO
Reset
R61653 10K/4
JW/1*5/WH/2.0/RA/D/X
SW-DP
XTIN
XTOUT
R61655 1M/4/X
12M/20p/30ppm/3.2*2.5/80/S/X
Y2
XTAL_4PIN_SMD-E3SB27000F18S3B
CR2 10p/4/NPO/50V/J/X
CR3 10p/4/NPO/50V/J/X
C62789 1u/4/X5R/6.3V/K
C62790 1u/4/X5R/6.3V/K
C62791 1u/4/X5R/6.3V/K
C62792 0.01u/4/X7R/50V/K
R61657 0/4
R61658 100/4/1
R61659 100K/4/1
PEX_RST*
INT, 100Hz
R61607 10K/4
Q10912
R61606 1K/4/X
R61609 10K/4/1
Q10913
1G1D1S
R61616 0/4
GPIO11_LOGO_LED_POWER_BRAKE
R61618 100K/4/X
C62784 0.1u/4/X7R/16V/K/X
FAN_LED_VDD
Co-Lay
LB531 30/6/4A/S
R61656 0/8/x/X
PS_5V_LED_VIN
C62793 0.1u/4/X7R/16V/K
C62794 10u/8/X5R/16V/K
C62795 10u/8/X5R/16V/K
U535
INS17272742
MP1475/TSOT-23
R61660 100K/4/1
R61661 1K/4/1/x/X
R61663 27.4K/4/1
C62797 0.01u/4/X7R/50V/K
PS_5V_LED_EN
PS_5V_LED_SW_VCC
C62798 0.1u/4/X7R/16V/K
R61664 49.9k/X
PS_5V_LED_SW_ISET
VIN EN/FSYNC SW FB GND BOOT
R61662 4.7/6
PS_5V_LED_SW_BOOT_R
PS_5V_LED_SW_BOOT
C62796 0.1u/4/X7R/16V/K
L507 4.7uH/7A/S/x/X
L505 4.7uH/3.3A/29m/S
L506 1uH/11A/S/x/X
PS_5V_LED_SW_PHASE
PS_5V_LED_SW_FB
PS_5V_LED_SW_FB_R
R61666 49.9K/4/1
R61665 100/4/1
R61667 0/4
C62800 0.1u/4/X7R/16V/K
C62801 22u/6/X5R/6.3V/M
C62799 22u/6/X5R/6.3V/M
C62802 22u/6/X5R/6.3V/M
C62808 2.2n/6/X7R/50V/K
R61671 2.2/8
C62809 15pF/X
R61672 40.2K/4/1
PS_5V_LED_DDC_R
R61673 7.68K/4/1
For Leak detect
12V_F
C62783 0.1u/4/X7R/16V/K
R61615 0/4
U534B LM358DR/SO8
ADC_Vref = 3V
Vref = 3V * (3K/4K) = 2.25V
R61620 1K/4/x/X
ADC_Vref
R61631 1M/4/1
3K/4/1 R61626
R61634 1K/4/1
C62786 0.1u/4/X7R/16V/K
Leak_Vref
Leak_Det
R61637 0/4
C62787 1n/4/X7R/50V/K
LM358DR/SO8 U534A
R61642 1M/4/1/x/X
C62788 100p/4/x/X
R61638 0/4
R61643 10K/4/1
Leak_Det_R
R61649 3K/4/1
R61625 10K/4/1
Q10914B 2N7002DW SOT363
Q10914A 2N7002DW SOT363
30,47
PS_5V_EN
For MKT Demo, Add 5V Power bank to MCU 3V3
U536 LR1117CSX/SOT223/1A
C62803 0.1u/4/X7R/16V/K
C62804 10u/6/X5R/6.3V/M
R61668 620/4/1
R61670 1.02K/4/1
PS_5V_ADJ
C62805 10u/6/X5R/6.3V/M
C62806 4.7uF/X
C62807 1u/4/X5R/6.3V/K
Vout=1.25*(1+1020/620)+60uA*1000=3.36V
3V3_F
LB532 30/6/4A/S/x/X
R61680 10K/4
R61678 1K/4
Q10916
R61675 2K/4/1
C62811 10u/8/X5R/16V/K
J5023
JW/1*3/BK/2.0/VA/S/H6.1/FL3.4
J5023, J5025 Co-Lay
FAN Leak GND
J5025
<PITCH> H1X2-2MM
R61683 0/4/x/X
Leak_Det
For Leak detect
R61679 1K/4
Q10917
R61676 2K/4/1
C62812 10u/8/X5R/16V/K
J5024
JW/1*3/BK/2.0/VA/S/H6.1/FL3.4
R61682 10K/4
RGB_D_2
R61686 9.09K/4/1
3V3_F_Detect
C62814 0.1u/4/X7R/16V/K
R61688 1K/4/1
R61684 10K/4/1
GPIO7_FAN_B_TACH_RR
Q10918
R61685 0/4
GPIO7_FAN_B_TACH_R
C62813 1n/4/X7R/50V/K
R61687 10K/4/1
GPIO13_FAN_TACH_AR
Q10919
R61689 0/4
GPIO13_FAN_A_TACH_R
C62815 1n/4/X7R/50V/K
R61681 10K/4
RGB_D_3
R61677 1K/4
Q10915
R61674 2K/4/1
C62810 10u/8/X5R/16V/K
J5022
5V D GND NC
WF/1*4/WH/1.25/VA/S
For LCD monitor
I2CB_SCL_R
I2CB_SDA_R
SCL SDA 5V GND
J5026
HDR_1M4 MALE 2.0MM VERTICAL
GPU COMMON
27,56

GIGABYTE™

Title
GV-N3070AORUS M-8GD

Size	Document Number	Rev
D	GV-N3070AORUS M-8GD	1.0

Date: Tuesday, September 08, 2020 Sheet 56 of 57

History

Date	Modify
2018.07.21	First version

GIGABYTE

Title PCIE

Size Custom

Document Number GV-N3070AORUS M-8GD

Rev 1.0

Date: Tuesday, July 21, 2020

Sheet 57 of 57