2~3 Lecture Contents

- Setting up the NodeMCU programming environment

  Hello World! Output

  Digital I/O Function, Analog I/O Function

  LED Control Basics

  Drawing Schematics with Fritzing

  Exercises

  2 LED blink

  ADC (Analog Digital Converter) : A0 Analog Pin

  LED brightness control with PWM

  LED brightness control using photoresistors (light sensors)

NodeMCU Arduino Programming Settings

- https://www.arduino.cc/

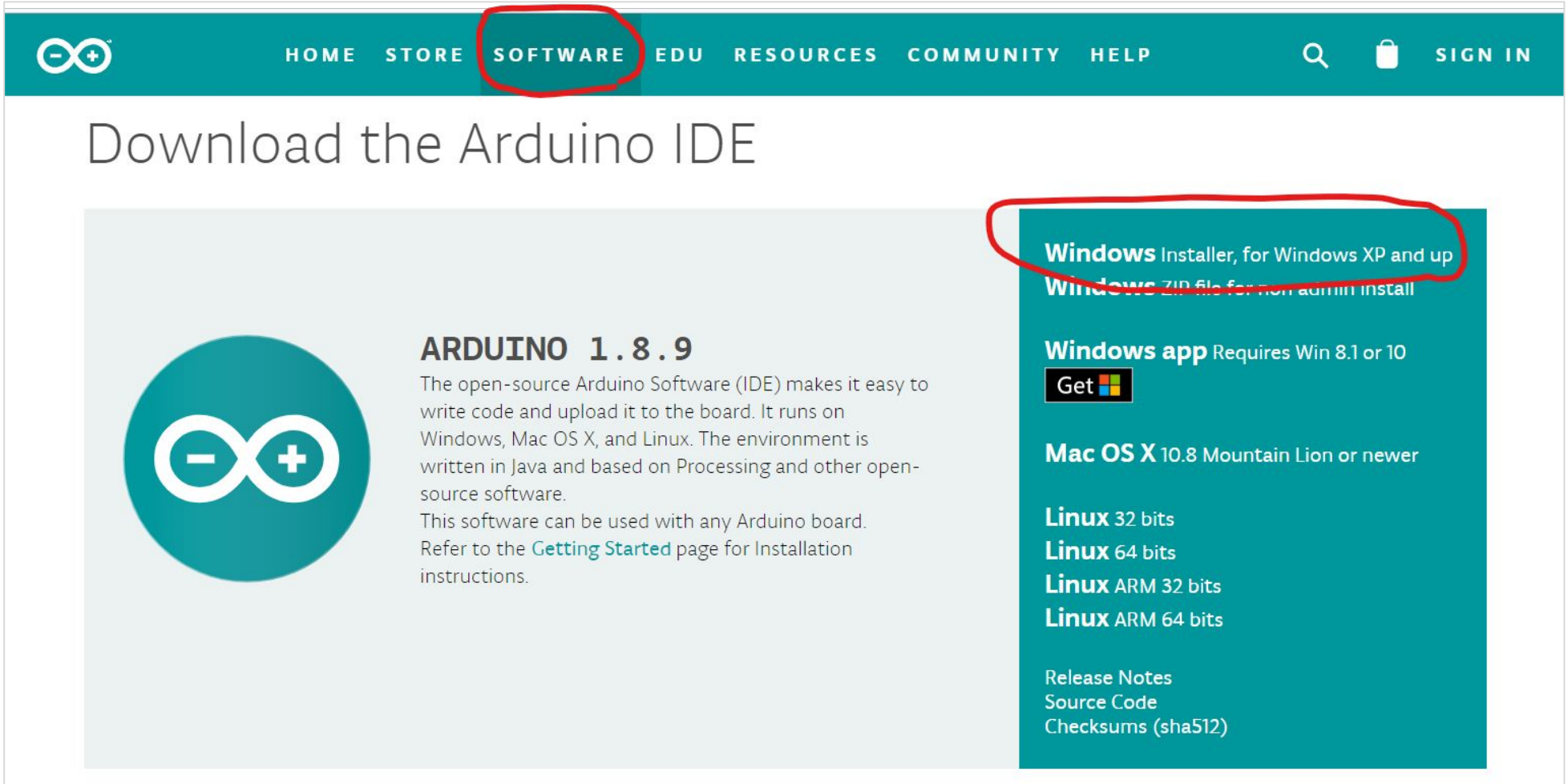

Download and install the NodeMCU drive

- NodeMCU USB to UART Bridge Chip
  For CP102: The chip we use
  FOR CH340
  CP102 Drive Download
  https://www.silabs.com/products/development-tools/software/usb-to-uart-bridge-vcp-drivers#windows
  Unzip the zip file and select x64 if your PC has more than 4GB of memory, or x86 if less than
  In the case of the NodeMCU for the CH340 chip, the relevant drive must be downloaded and installed.

Download and install NodeMCU CP102 driver

Download for Windows 10 Universal (v10.1.3)

Platform	Software	Release Notes
Windows 10 Universal	Download VCP (2.3 MB)	Download VCP Revision History

Download for Windows 7/8/8.1 (v6.7.6)

Platform	Software	Release Notes
Windows 7/8/8.1	Download VCP (5.3 MB) (Default)	Download VCP Revision History
Windows 7/8/8.1	Download VCP with Serial Enumeration (5.3 MB) Learn More »	Download VCP Revision History

Download for Windows XP/Server 2003/Vista/7/8/8.1 (v6.7)

Platform	Software	Release Notes
Windows XP/Server 2003/Vista/7/8/8.1	Download VCP (3.66 MB)	Download VCP Revision History

Download for Windows 2K (v6.3a)

보드 관리자 URLs 설정

- Preferences – > Add additional board manager URLs
  "http://arduino.esp8266.com/stable/package_esp8266com_index.json"

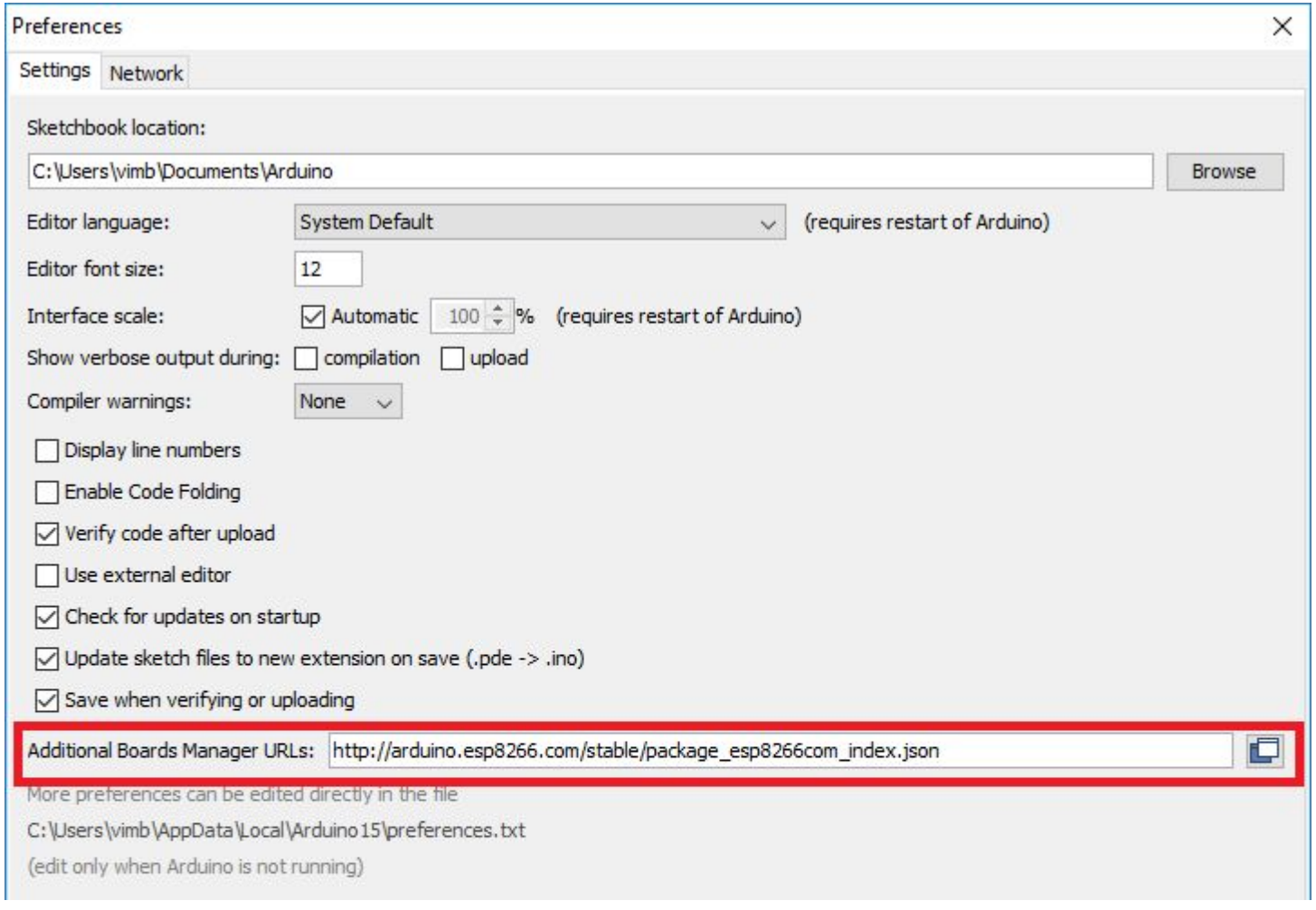

Board Manager Settings: ESP8266 Search

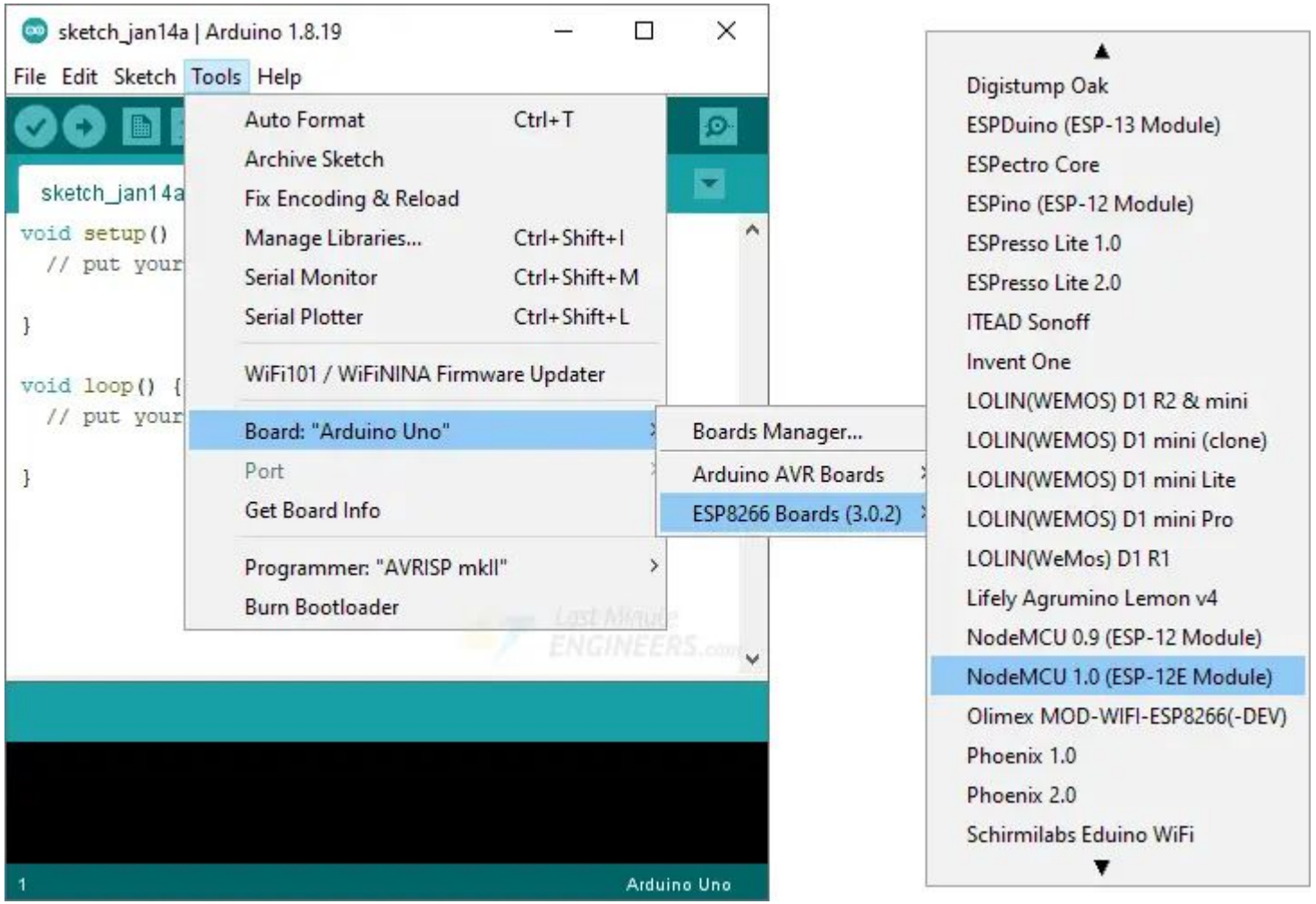

Board admin settings: ESP8266 search

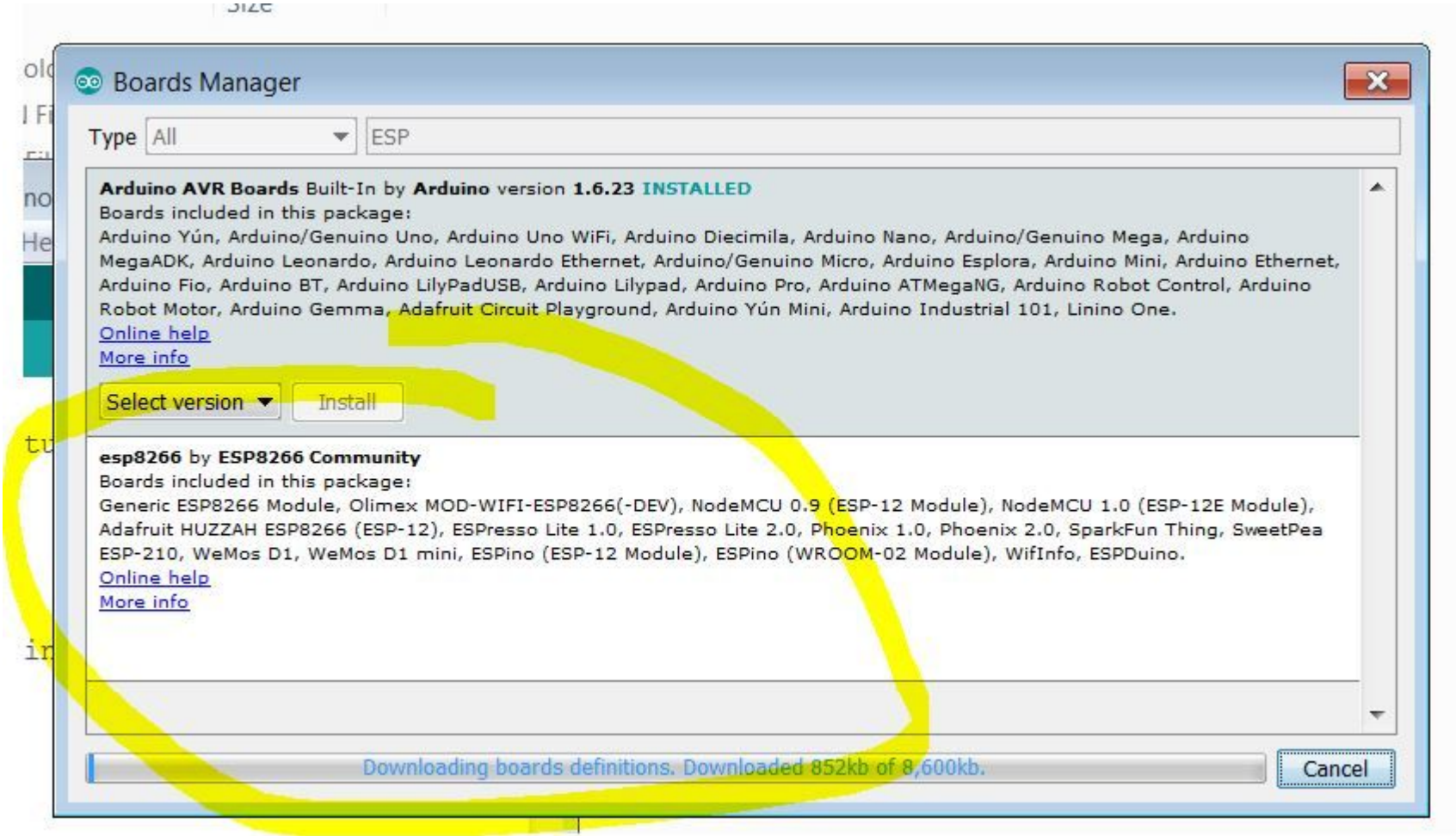

Serial Port Settings

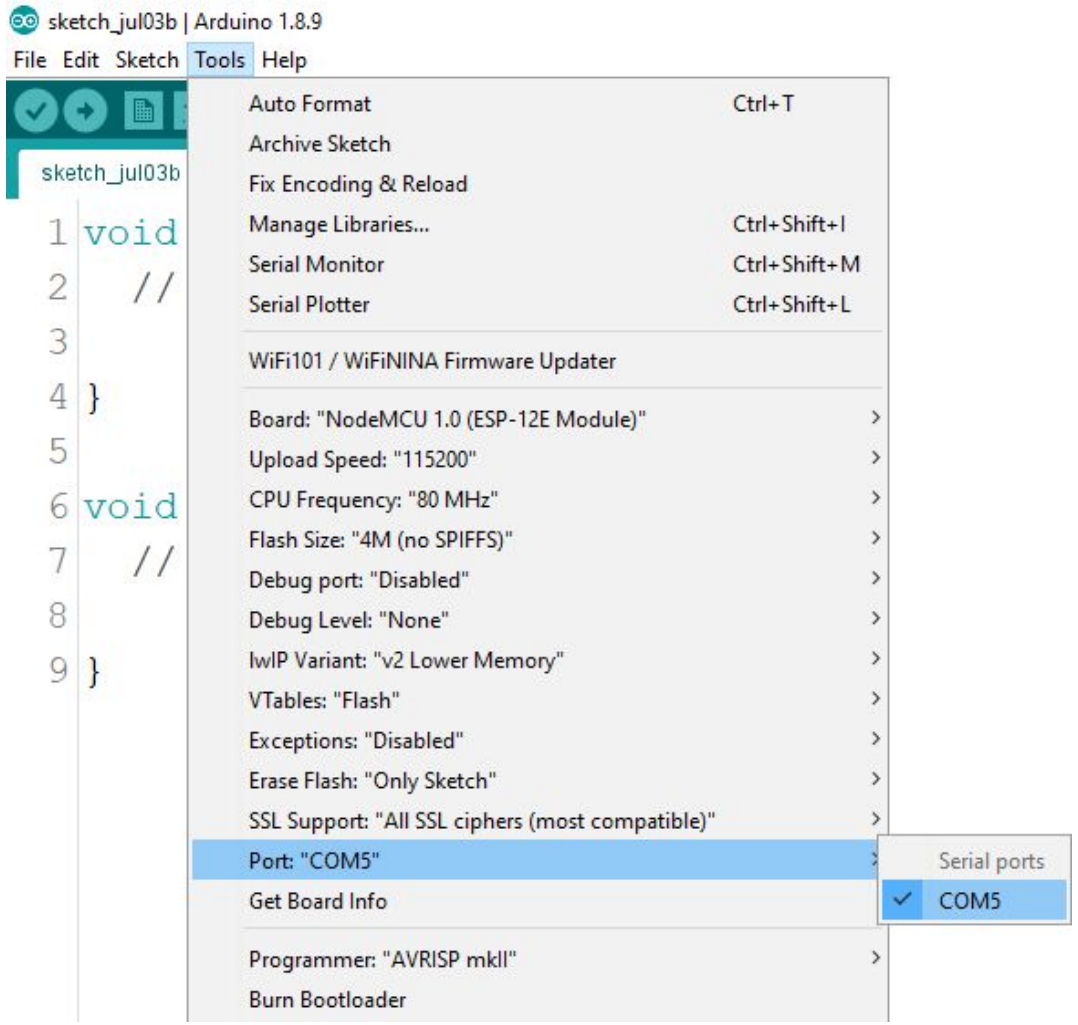

Arduino Programming Architecture

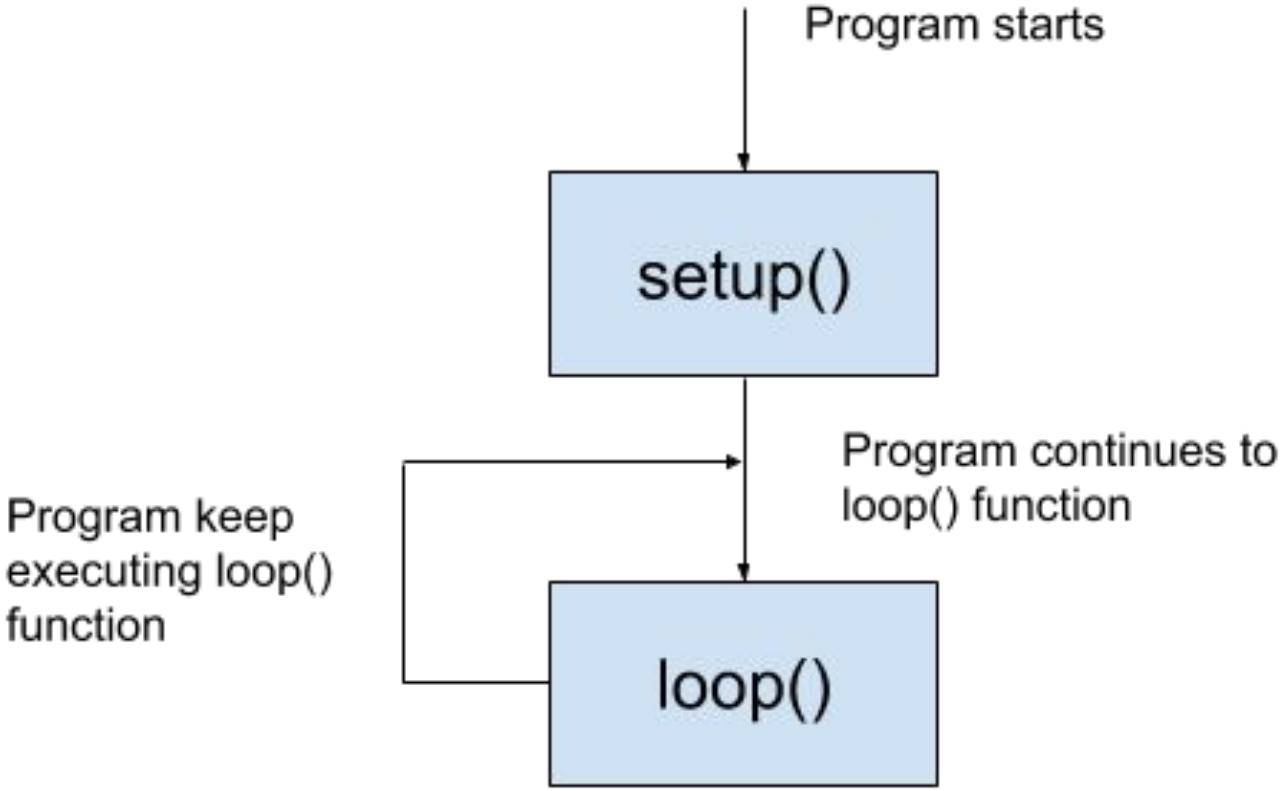

Hello World!

```
void setup() {
    // put your setup code here, to run once:
    Serial.begin(115200);
}

void loop() {
    // put your main code here, to run repeatly:
    Serial.print("Hello World\n");
}
```

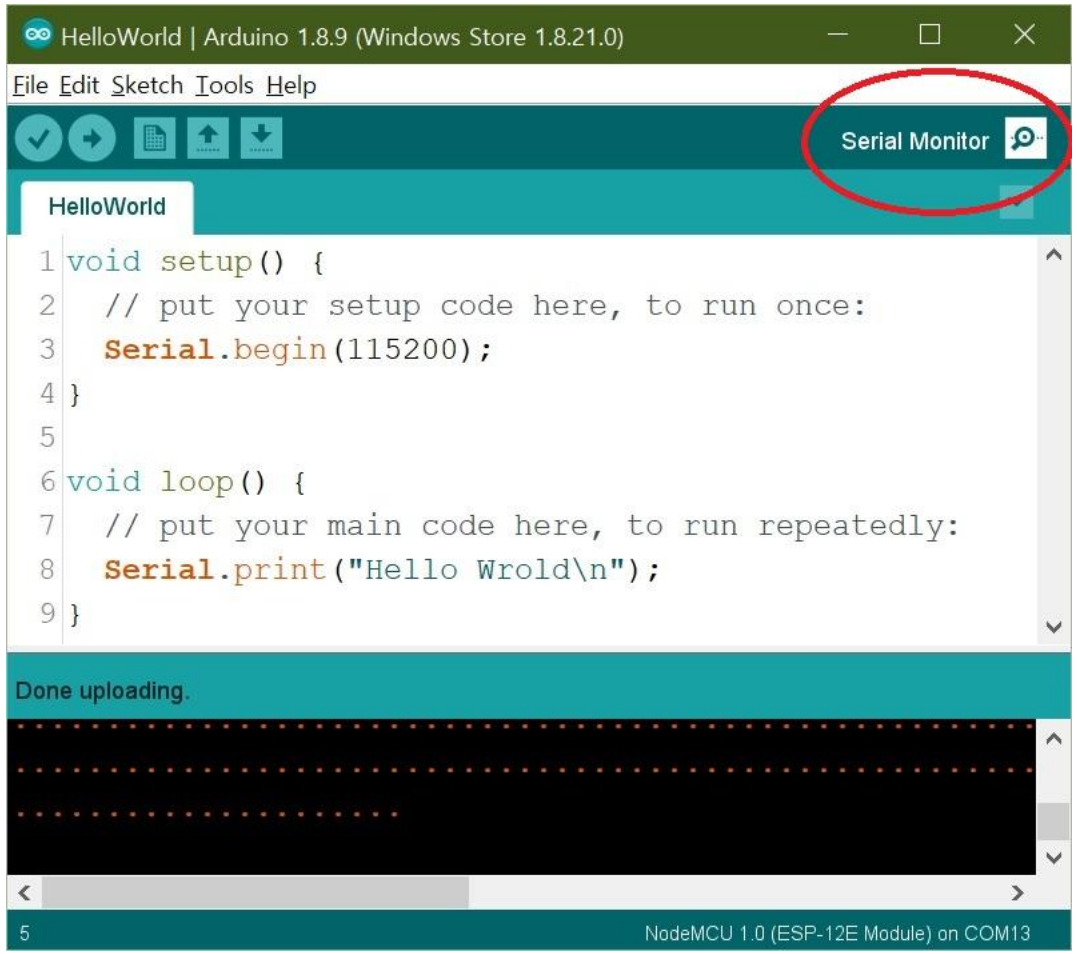

Digital I/O Functions

- **`pinMode(pin, mode)`**
  - Assigned Pin Number(**`pin)`** `as input or mode.`
  - **`pin`** : GPIO Pin Number
  - **`mode`** : **`INPUT, OUTPUT, INPUT_PULLUP, INPUT_PULLDOWN`**
- **`digitalWrite(pin, value)`**
  - On the specified digital pin**HIGH**(5V or 3.3V) or **LOW**(0V or ground) Writing Values
- **`delay(ms)`**
  - Specifying the program's latency (milliseconds) Arduino Function Note: https://www.arduino.cc/reference/en/

Analog input/output functions

- **`pinMode(pin, mode)`**
  - Configure a specified pin number as input or output (mode)

    output.
- **`analogRead(pin)`**
  - Read analog values (0~1023) with analog pins10 bit ADC : 2^{10} = 1024
- **`analogWrite(pin, value)`**
  - The NodeMCU has one analog pin at A0 Arduino Functions Note: https://www.arduino.cc/reference/en/

NodeMCU LED Control Fundamentals

- What to prepare

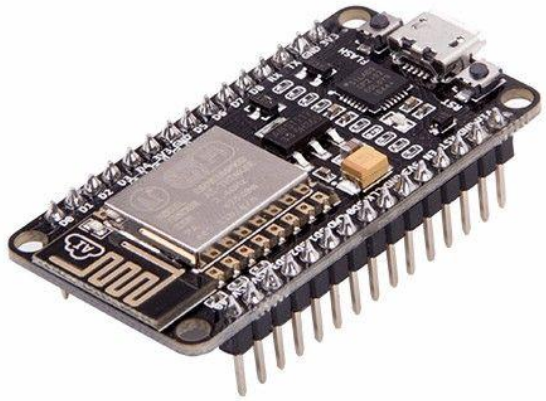

NodeMCU

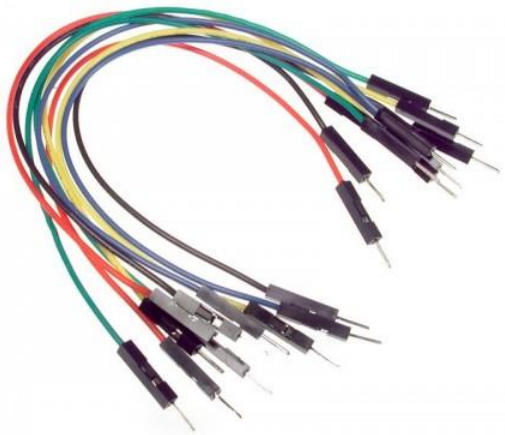

Jump
Cable

LE
D

Resistor
(220 Ω)

LED ON/OFF : **LED_BUILTIN(D0)**

Blink_Internal_LED | Arduino 1.8.9 (Windows Store 1.8.21.0)

File Edit Sketch Tools Help

Blink_Internal_LED §

```
1 //  Note that this sketch uses LED_BUILTIN to find the pin with the internal LED
2
3 void setup() {
4   pinMode(LED_BUILTIN, OUTPUT);     // Initialize the LED_BUILTIN pin as an output
5 }
6
7 // the loop function runs over and over again forever
8 void loop() {
9   digitalWrite(LED_BUILTIN, LOW);   // Turn the LED on (Note that LOW is the voltage le
10  // but actually the LED is on; this is because
11  // it is active low on the ESP-01)
12  delay(1000);                      // Wait for a second
13  digitalWrite(LED_BUILTIN, HIGH);  // Turn the LED off by making the voltage HIGH
14  delay(2000);                      // Wait for two seconds (to demonstrate the active
15 }
```

Done Saving.

15 NodeMCU 1.0 (ESP-12E Module) on COM13

Drawing a schematic: Fritzing

- Built-in LED(**`LED_BUILITIN`**) D0 pin

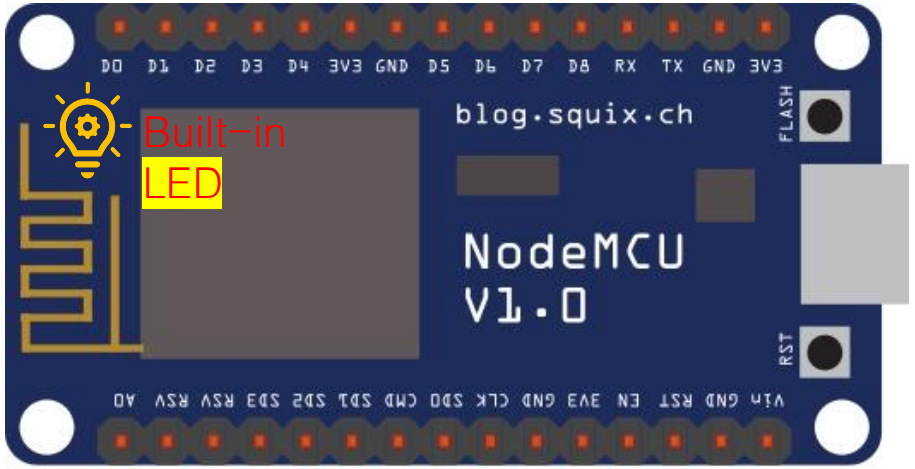

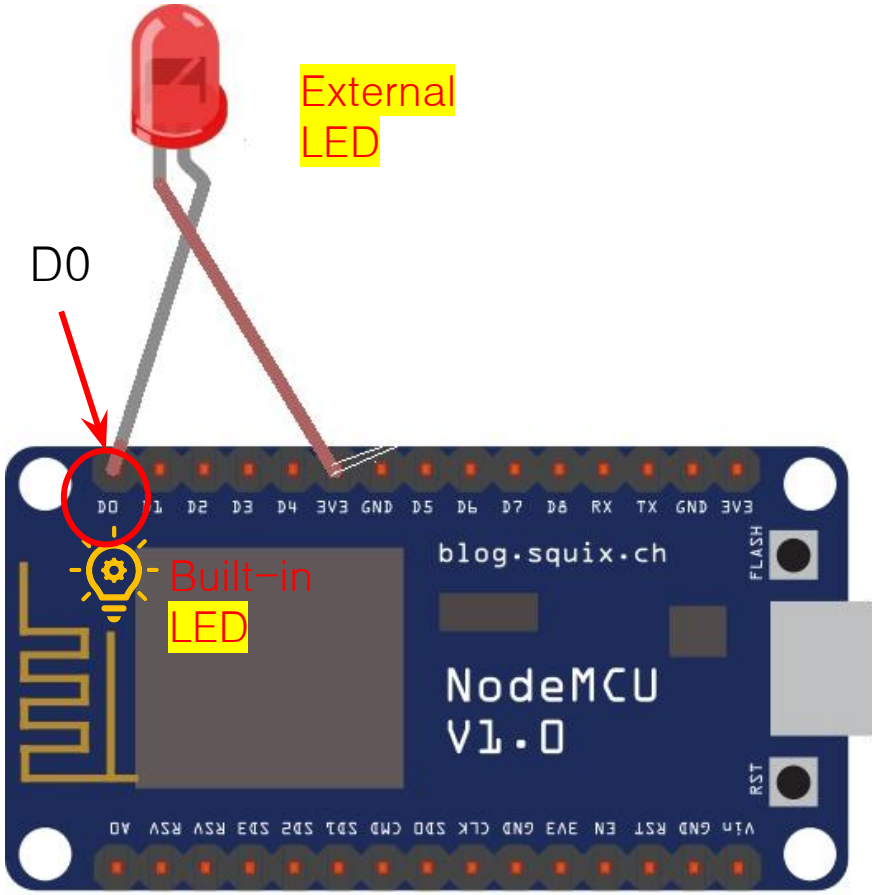

Built-in LED action confirmation : D0(GPIO4) pin

- There is no current resistance (220 Ω), so if you leave it on for a long time, the LED will heat up due to overload (caution!!)

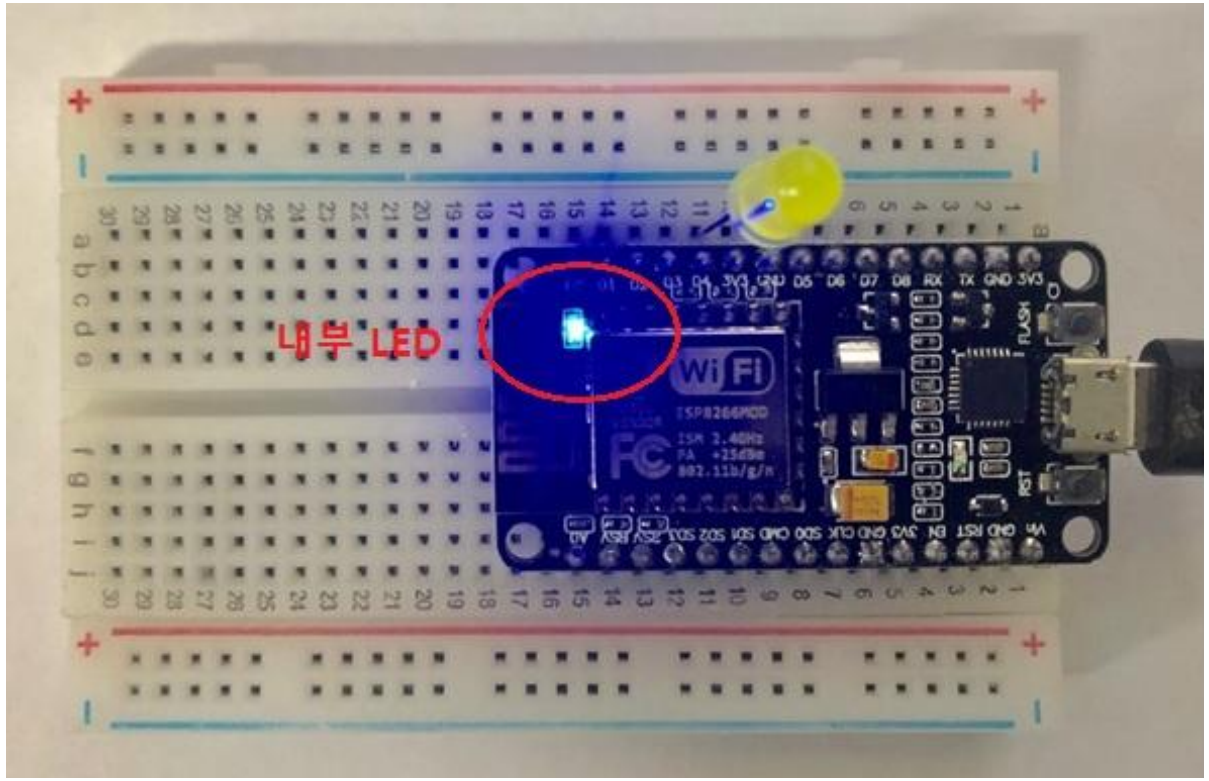

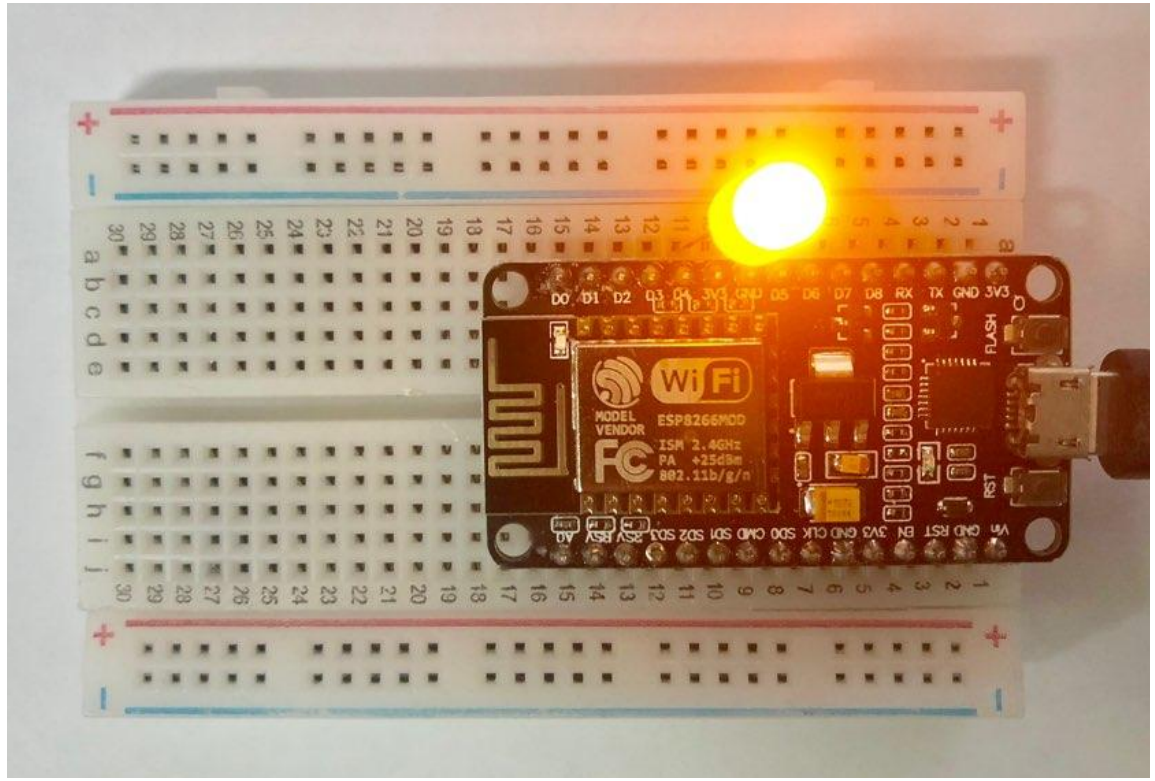

LED control : D2(GPIO4) pin

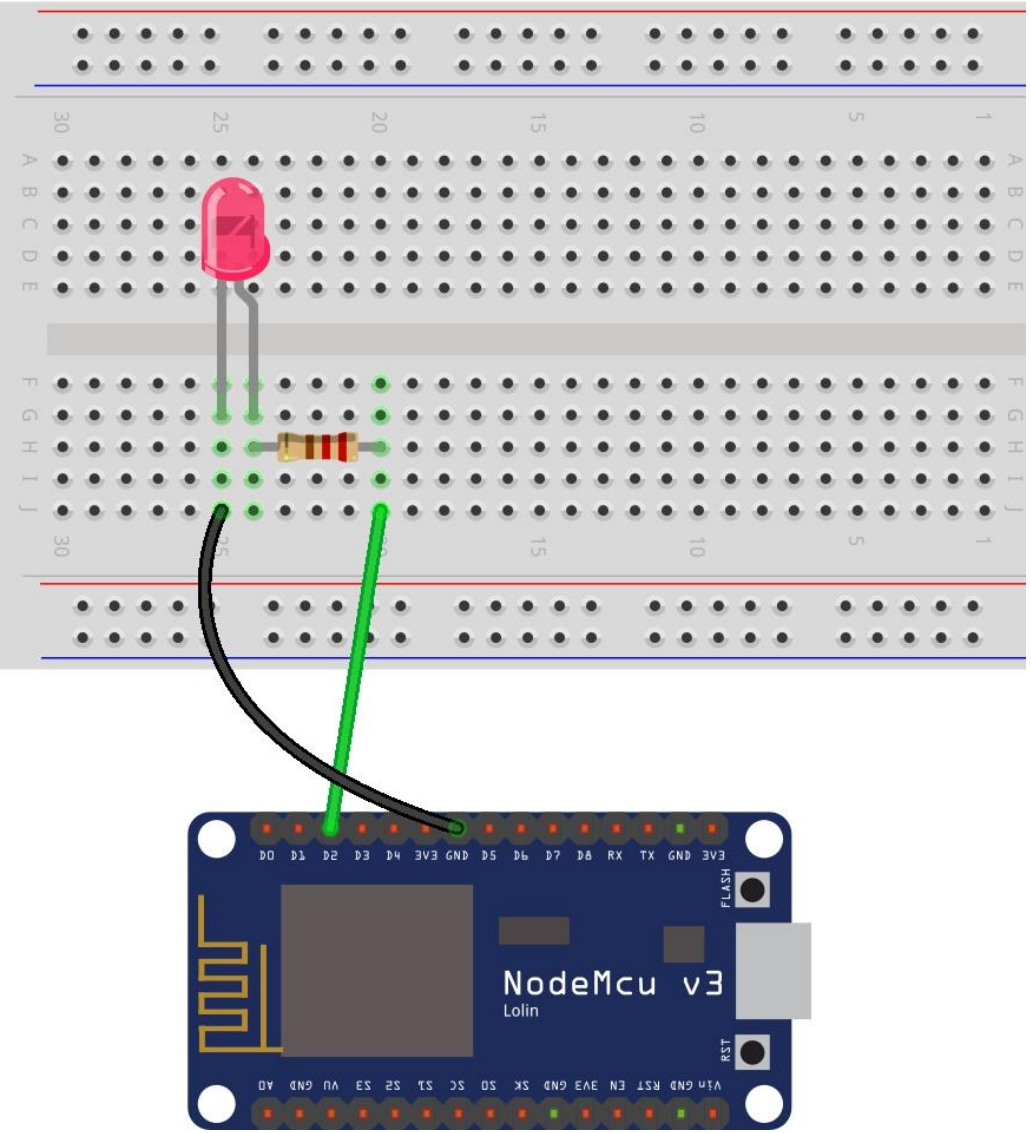

sketch : D2(GPIO4) pin

Blin_LED_D2 | Arduino 1.8.9 (Windows Store 1.8.21.0)

File Edit Sketch Tools Help

Blin_LED_D2 §

```
// Note that this sketch uses LED PIn D2(GPIO4)
#define LED_PIN D2
void setup() {
  pinMode(LED_PIN, OUTPUT);     // Initialize the LED_BUILTIN pin as an output
}

// the loop function runs over and over again forever
void loop() {
  digitalWrite(LED_PIN, LOW);   // Turn the LED on (Note that LOW is the voltage level
  delay(1000);                      // Wait for a second
  digitalWrite(LED_PIN, HIGH);  // Turn the LED off by making the voltage HIGH
  delay(2000);                      // Wait for two seconds (to demonstrate the active
}
```

Done uploading.

```
Sketch uses 258604 bytes (24%) of program storage space. Maximum is 1044464 bytes.
Global variables use 26696 bytes (32%) of dynamic memory, leaving 55224 bytes for local va
Uploading 262752 bytes from C:\Users\user\AppData\Local\Temp\arduino_build_53403/Blin_LED_
.......................................................................... [ 31% ]
.......................................................................... [ 62% ]
.......................................................................... [ 93% ]
.................                                                         [ 100% ]
```

1 NodeMCU 1.0 (ESP-12E Module) on COM13

LED action : D2 pin, 220 Ω resistance

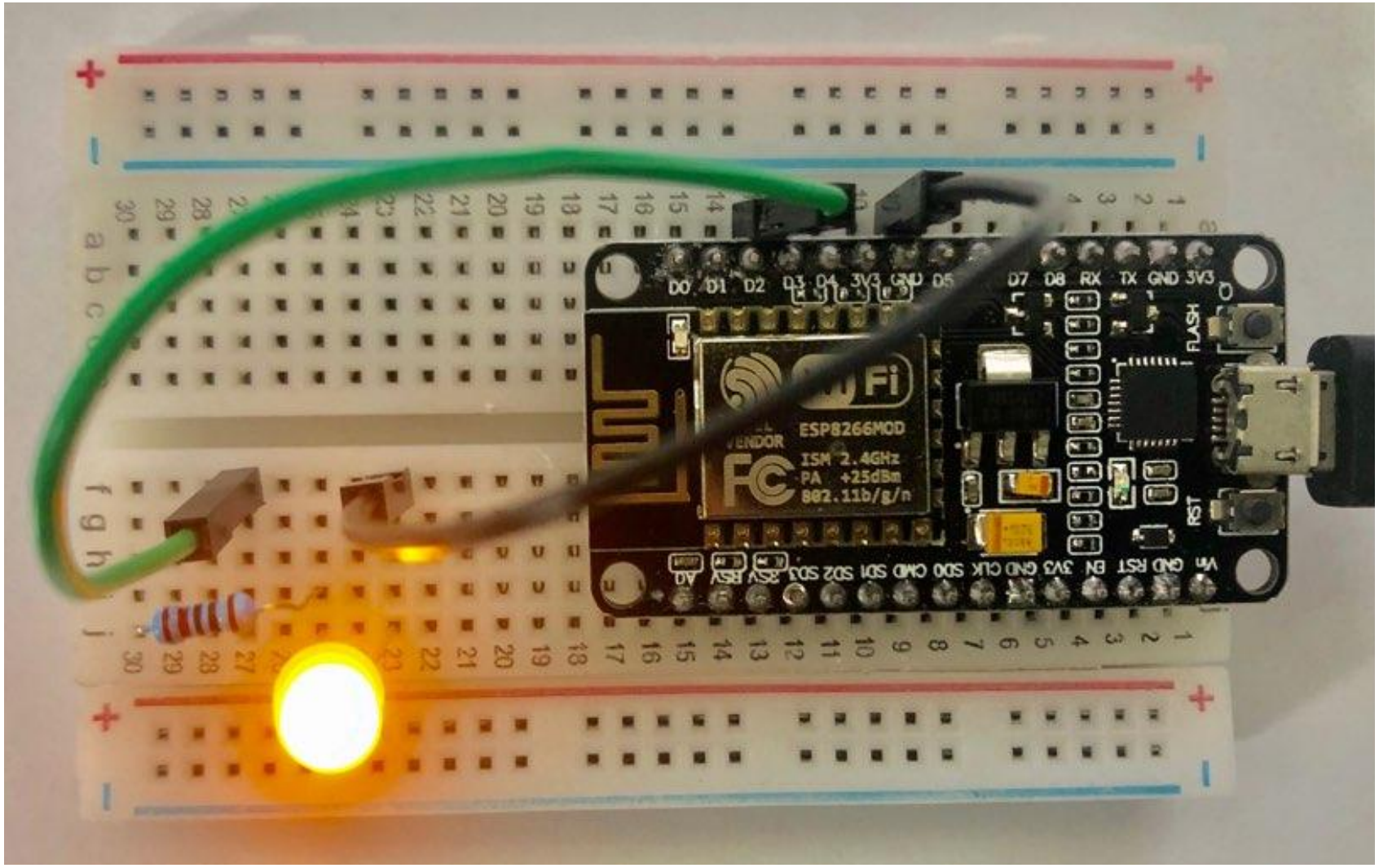

Lab 01

- Use 2 LEDs to blink at 0.5 sec intervals (red->yellow->red->yellow....) digitalWrite(), 220 Ω resistance

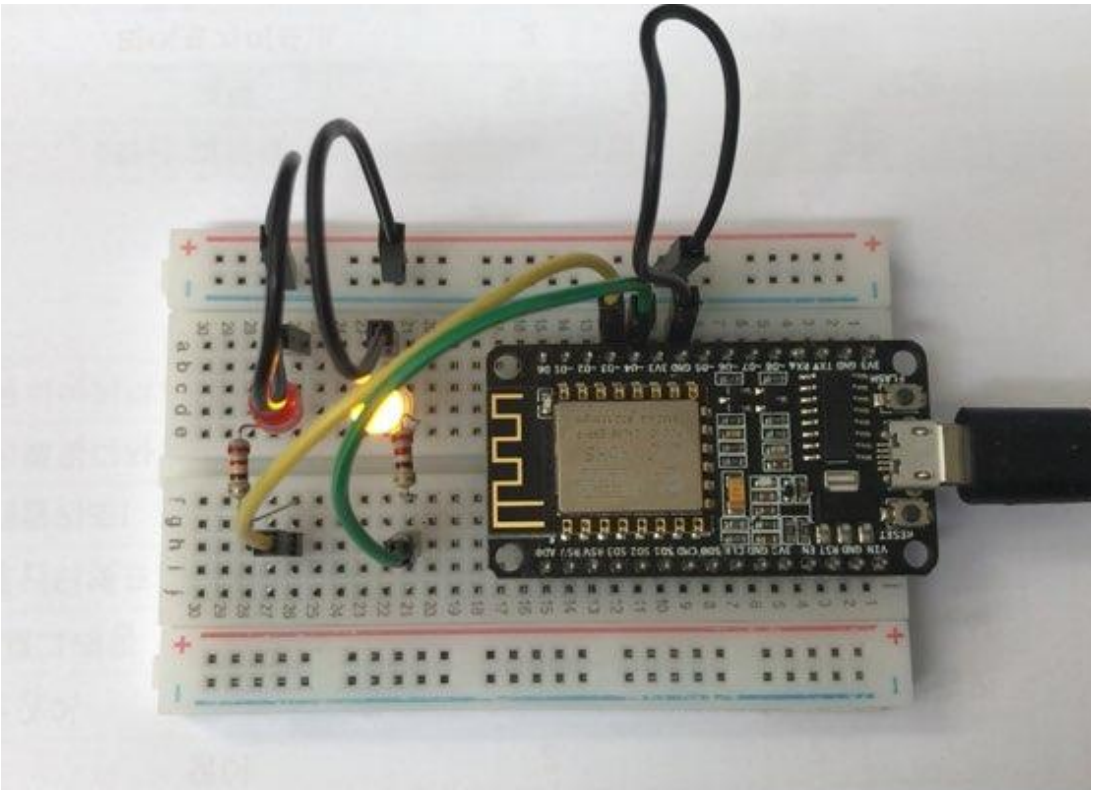

Practice Exercises 01 : Circuit Wiring

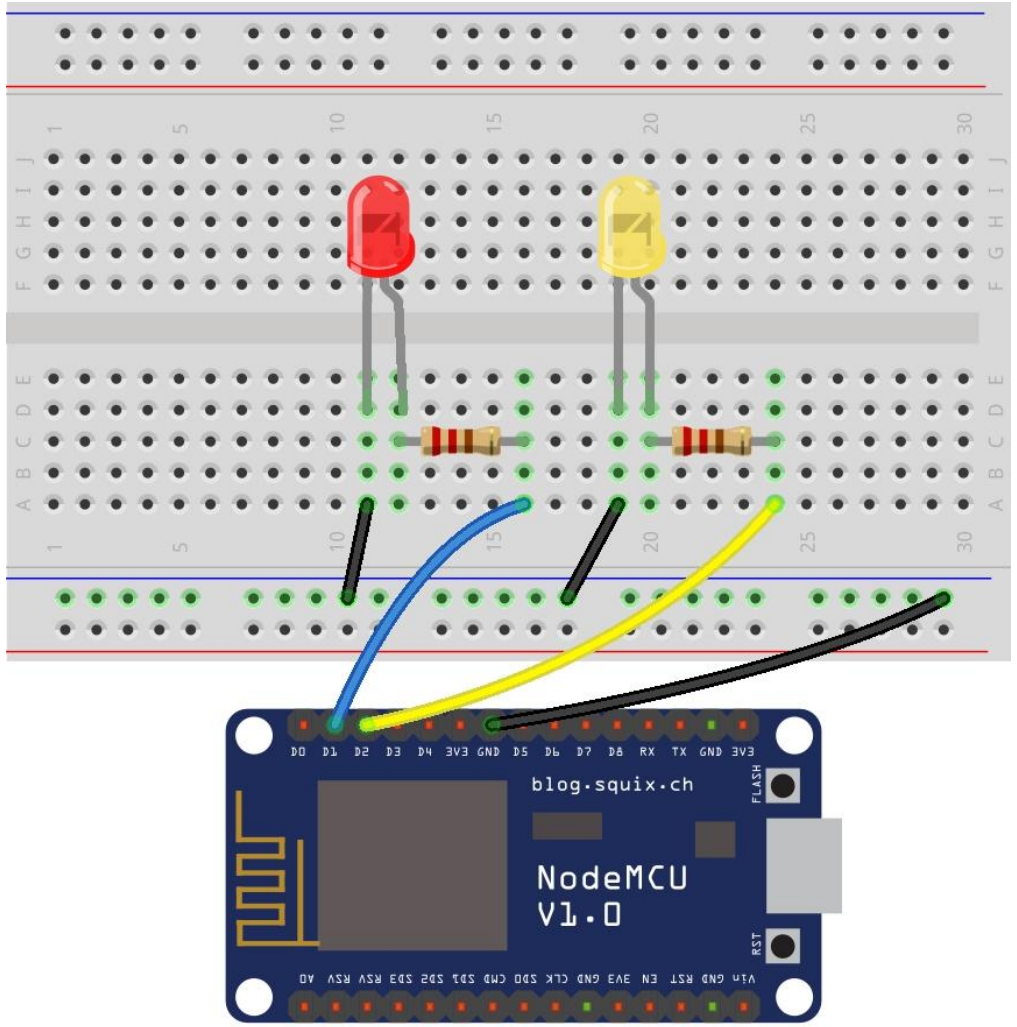

Practice Exercises02

- ADC : Analog Digital Converter
  - Converting the external power value (analog value) of the rheostat to the digital value (0 ~ 1023) and output it analog pin (A0), analogRead()

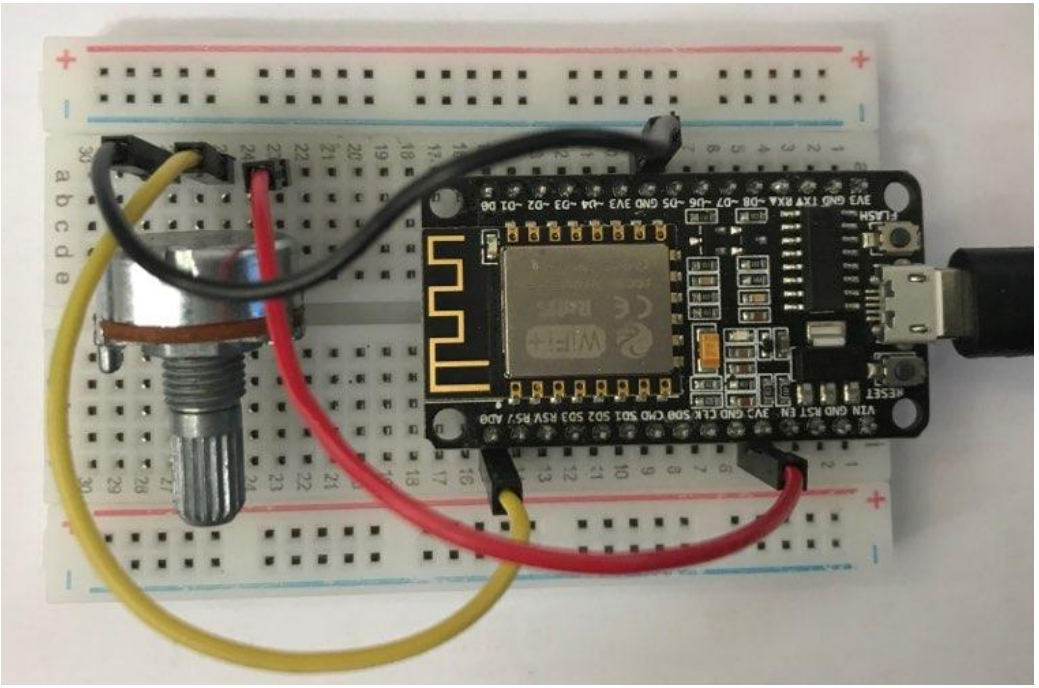

Practice Exercises 02 : CircuitWiring

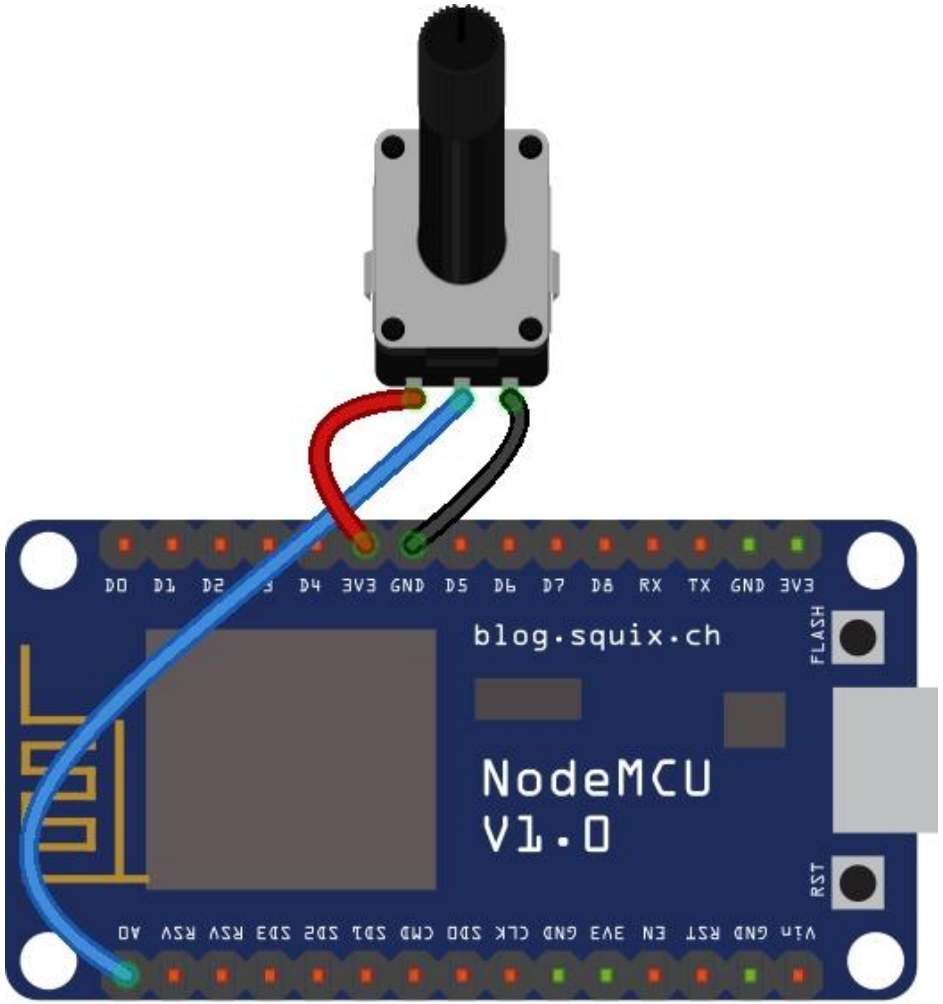

Practice Exercises 03

- PWM(Pulse Width Modulation), LED brightness with rheostats Adjust
  - Analog (A0) Pin, analogRead(), analogWrite()

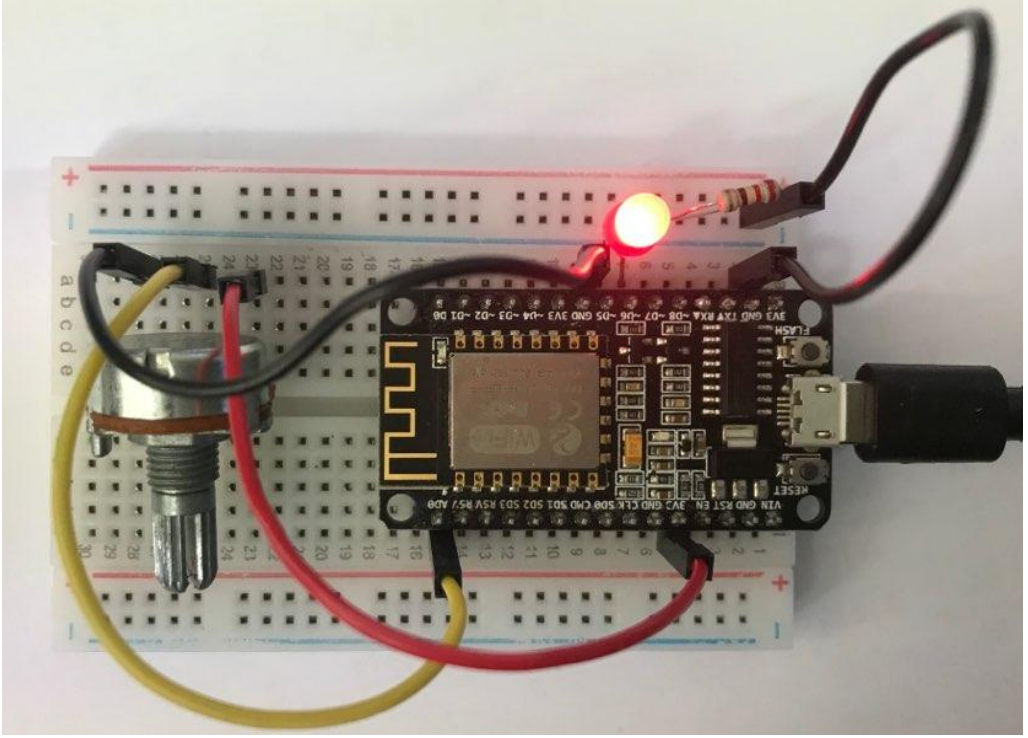

PWM(Pulse Width Modulation)

analogWrite(LedPin, 0);

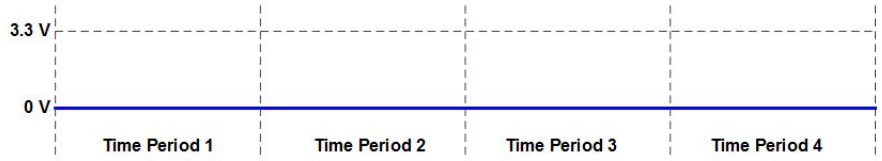

analogWrite(LedPin, 255);

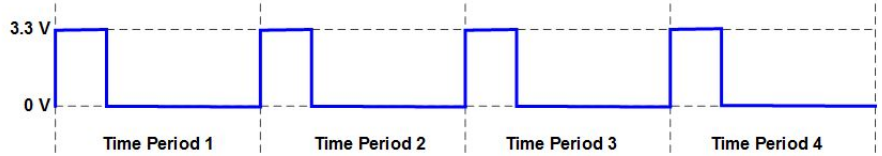

analogWrite(LedPin, 512);

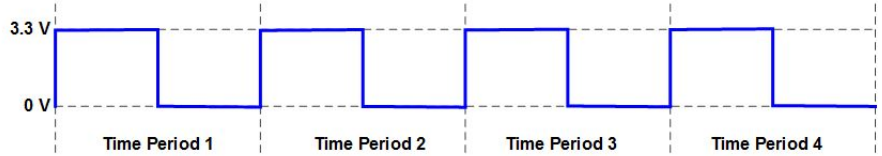

analogWrite(LedPin, 767);

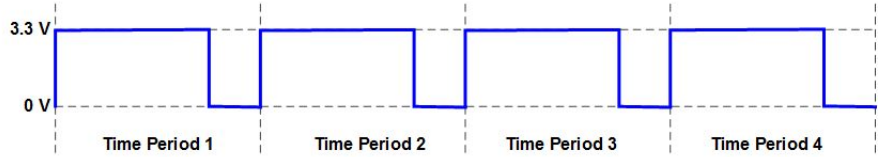

analogWrite(LedPin, 1023);

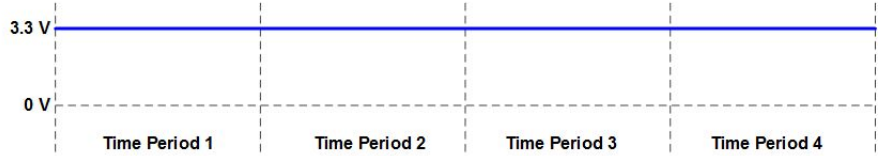

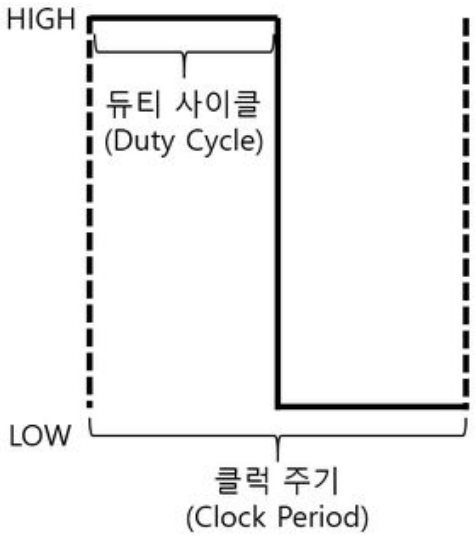

디지털 값 $= \frac{3.3}{1023} \times$ 아날로그 핀 값(Duty Cycle

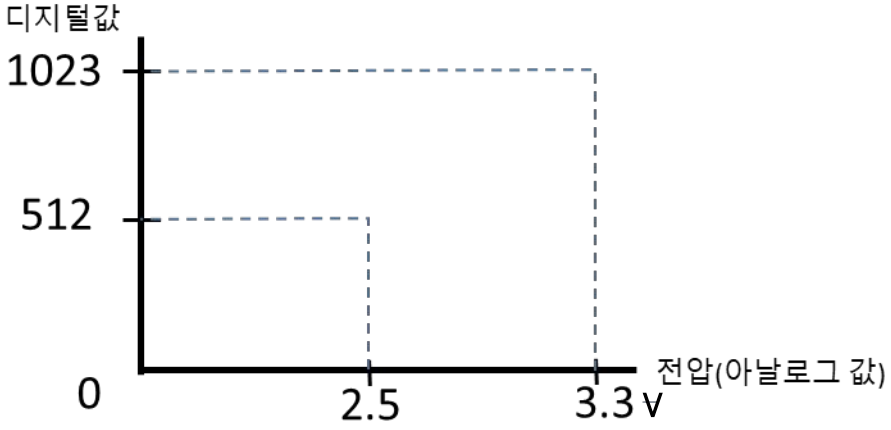

Node MCU PWM pin

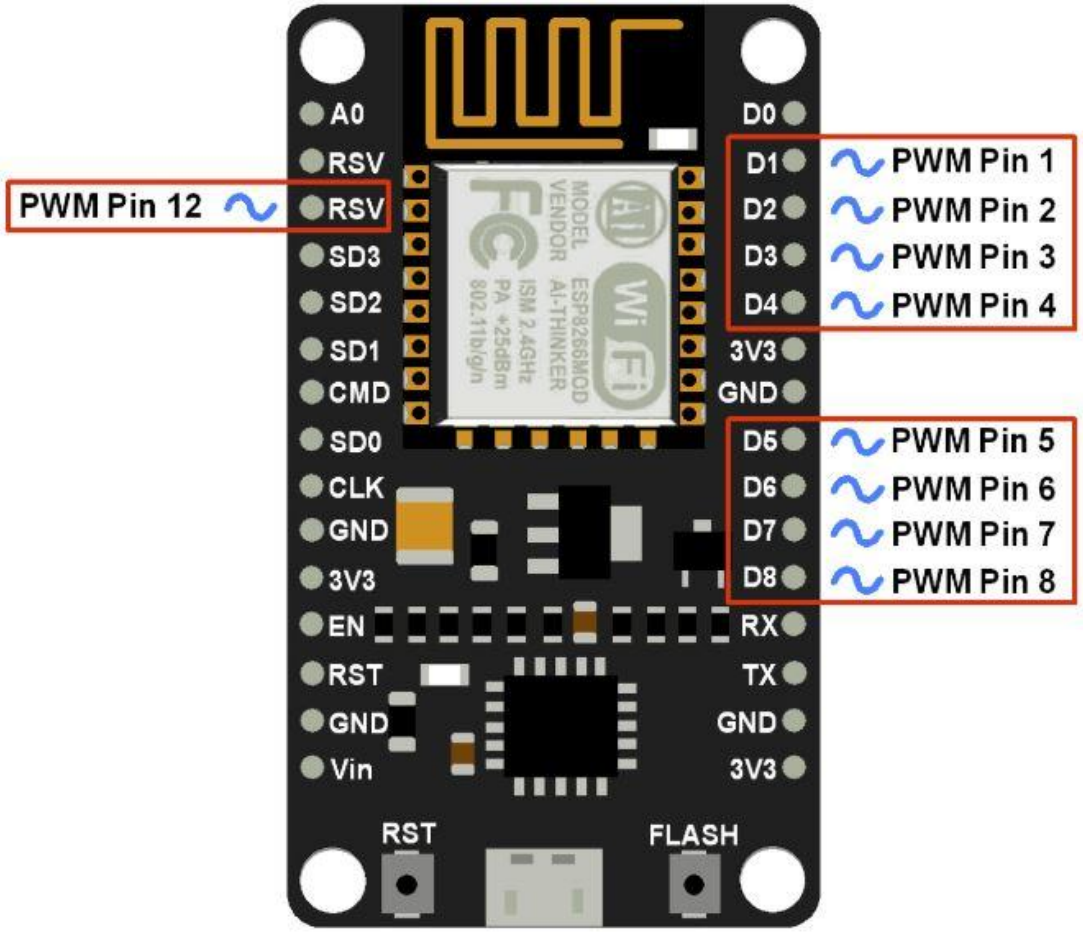

Practice Exercises03 : Circuit Wiring

- A0 : Analog Pin
- D6(GPIO12) : PWM

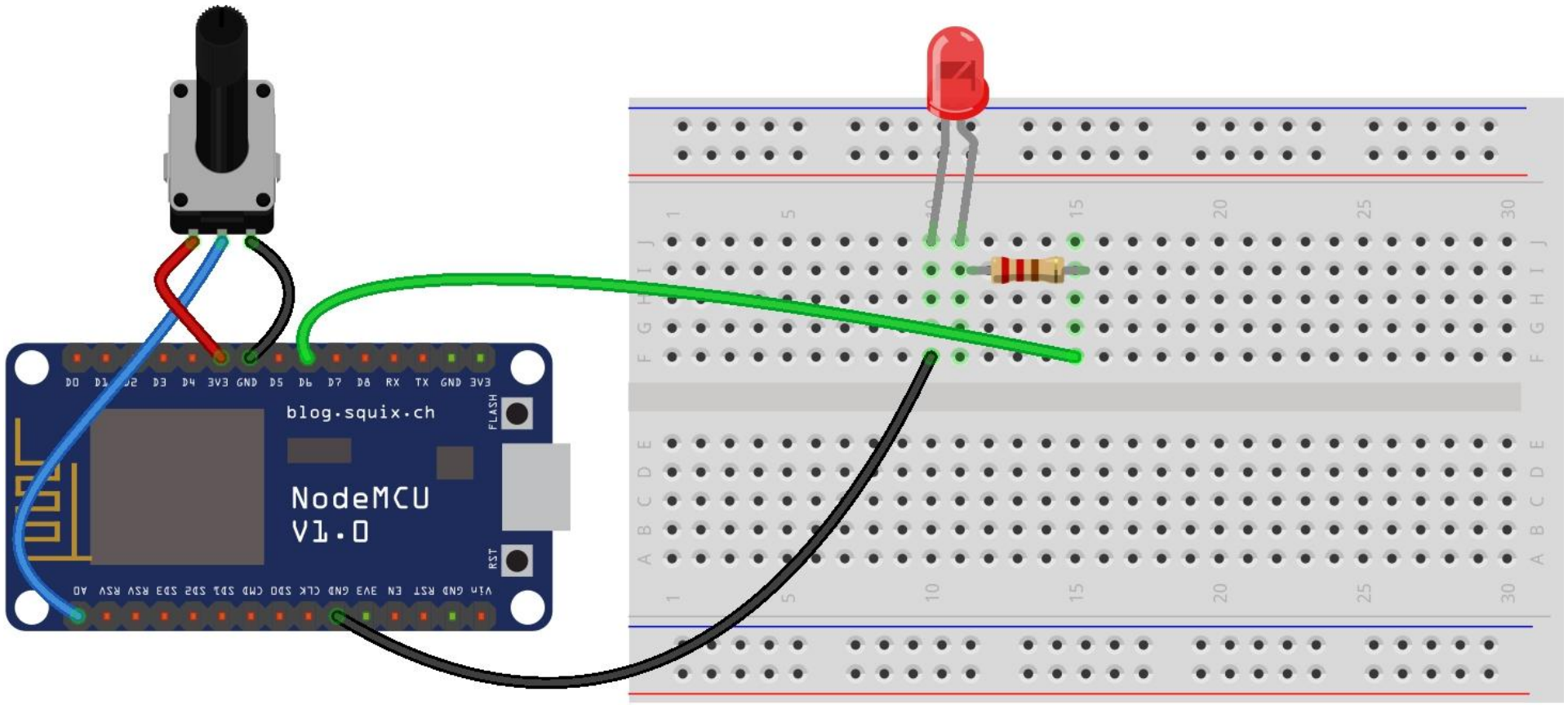

Practice Lesson 04: Adjusting LED Brightness Based on Light Intensity

- under Fritzing(Ardunio UNO) to NodeMCU Design
  - Photoresistor, LED, 2 resistors

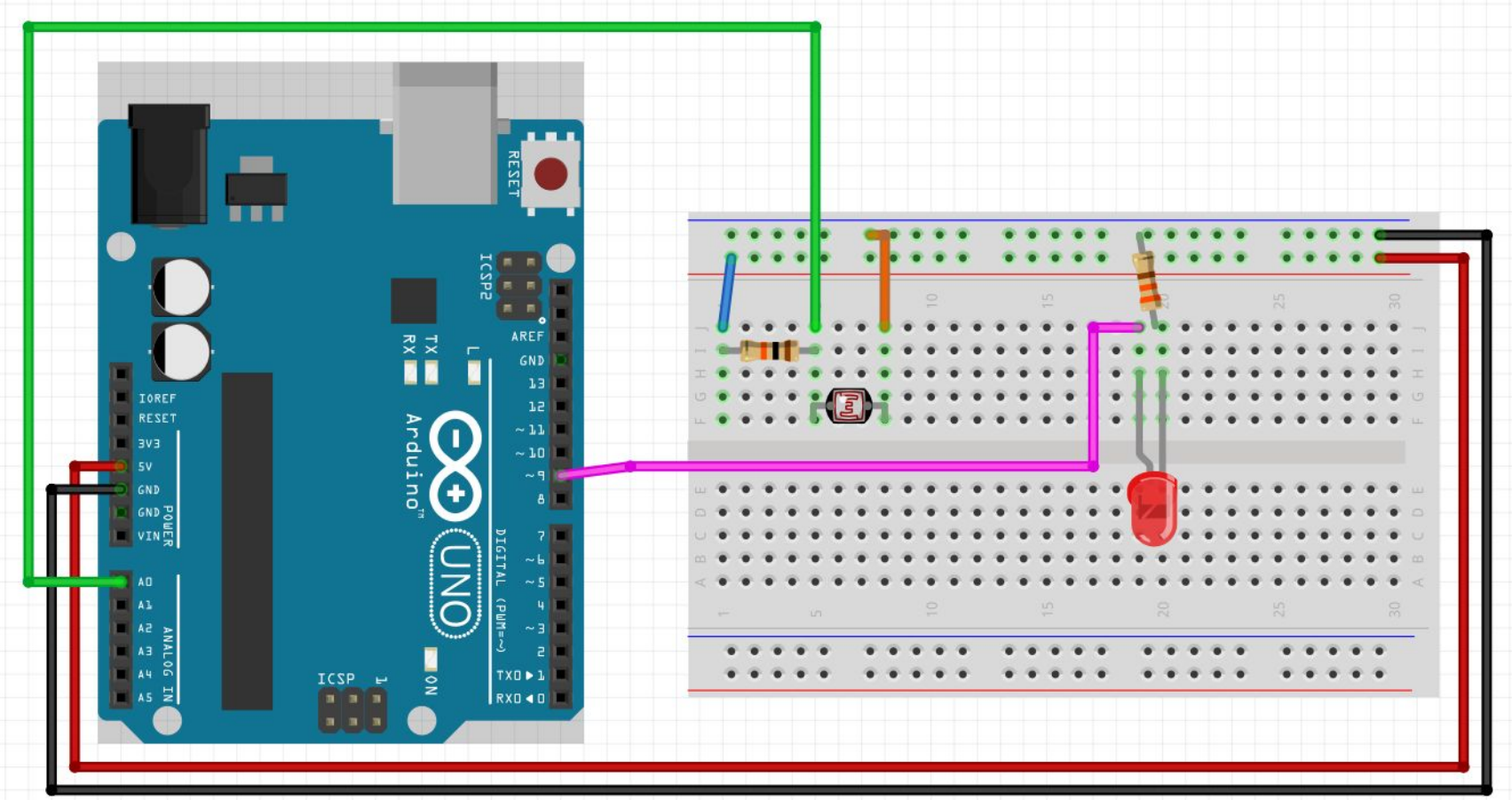

Reference videos

- NodeMCU Build a development environment https://youtu.be/YNOSQTk29DE

- NodeMCU Take control
  - https://youtu.be/nBc-2Wb49wI
  - https://developer.ibm.com/kr/cloud/internet-of-things/2017/07/30/esp8266-iot-arduino-ide-nodemcu-basic/
  - https://www.instructables.com/id/NodeMCU-Basic-Project-Blink-a-LED/