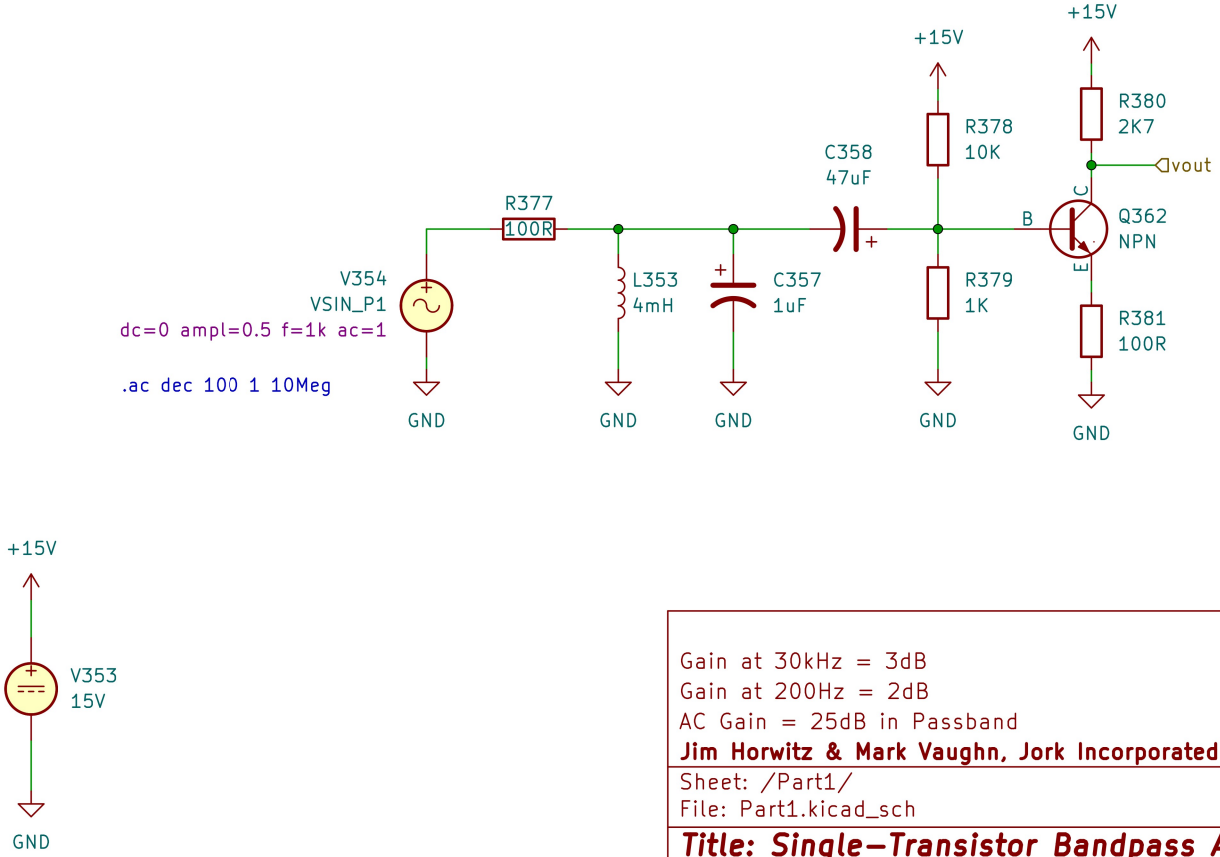

Gain at 30kHz = 3dB
Gain at 200Hz = 2dB
AC Gain = 25dB in Passband

Jim Horwitz & Mark Vaughn, Jork Incorporated

Sheet: /Part1/
File: Part1.kicad_sch

Title: Single-Transistor Bandpass Amplifier

Size: A5	Date: 2024-02-17	**Rev: 0**
KiCad E.D.A. kicad 7.0.5		Id: 4/4

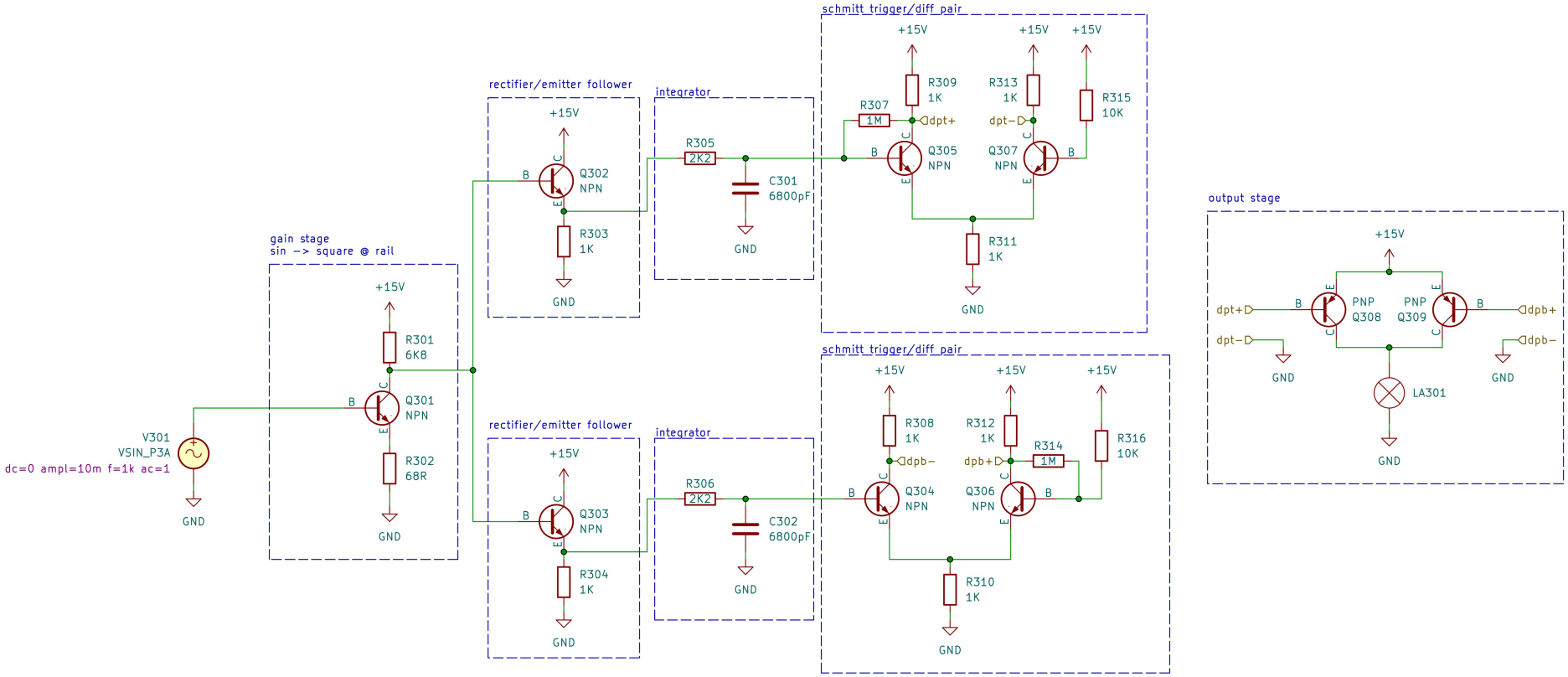

Jim Horwitz & Mark Vaughn, Jork Incorporated

Sheet: /Part3V1/

File: Part3V1.kicad_sch

Title:

Size: A4	Date: 2024-02-17	Rev:
KiCad E.D.A. kicad 7.0.5		Id: 2/4

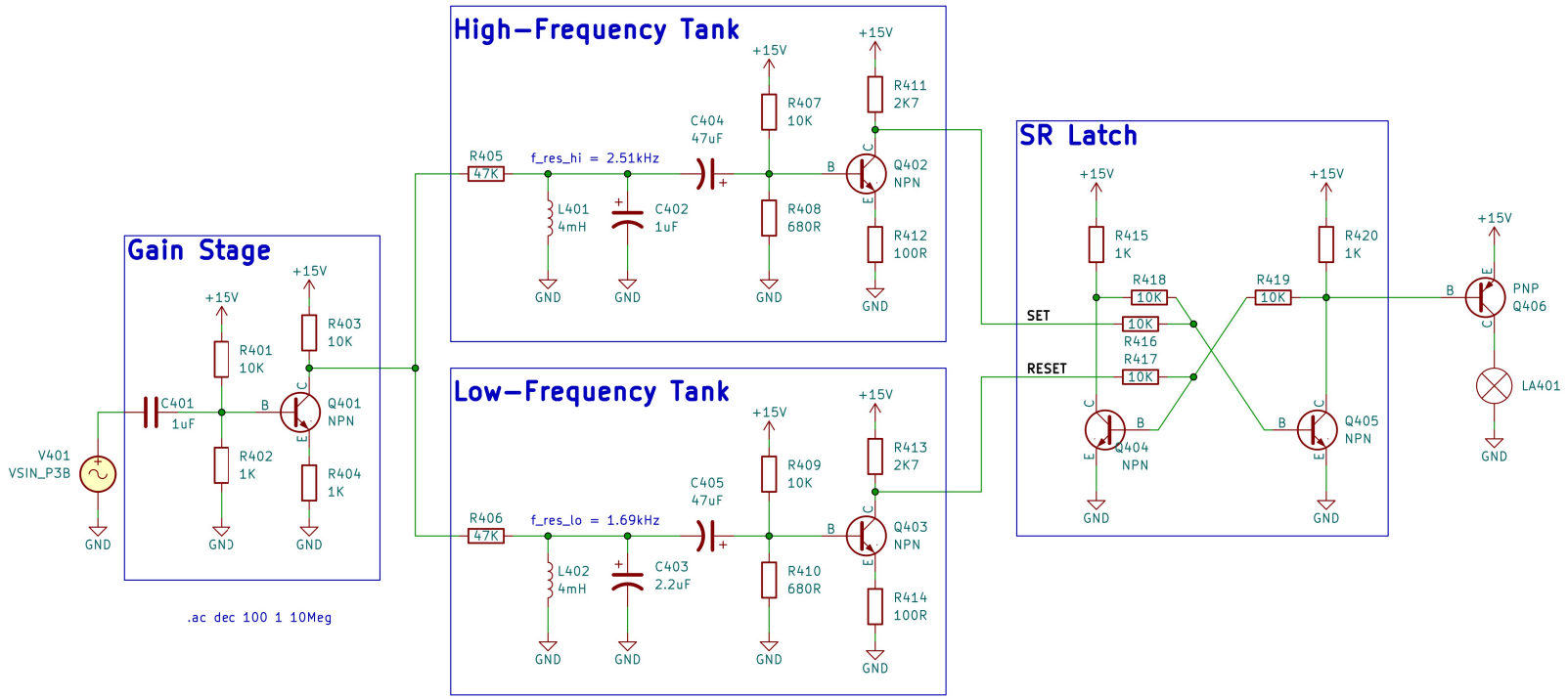

As the frequency of V_in (f_in) is swept, each resonant circuit will reduce V_in until f_in = f_res_hi or f_res_lo. At either point, the output of the respective tank circuit will be amplified enough to either set or reset the latch, thus turning the lamp on/off

Two parallel resonant filters operate an SR latch at their resonant frequencies
This lamp dislikes frequencies between 1.6 and 2.4kHz

Jim Horwitz & Mark Vaughn, Jork Incorporated

Sheet: /Part3V2/
File: Part3V2.kicad_sch

Title: Frequency Detecting Lamp

Size: A4	Date: 2024-02-17	**Rev: 0**
KiCad E.D.A. kicad 7.0.5		Id: 3/4