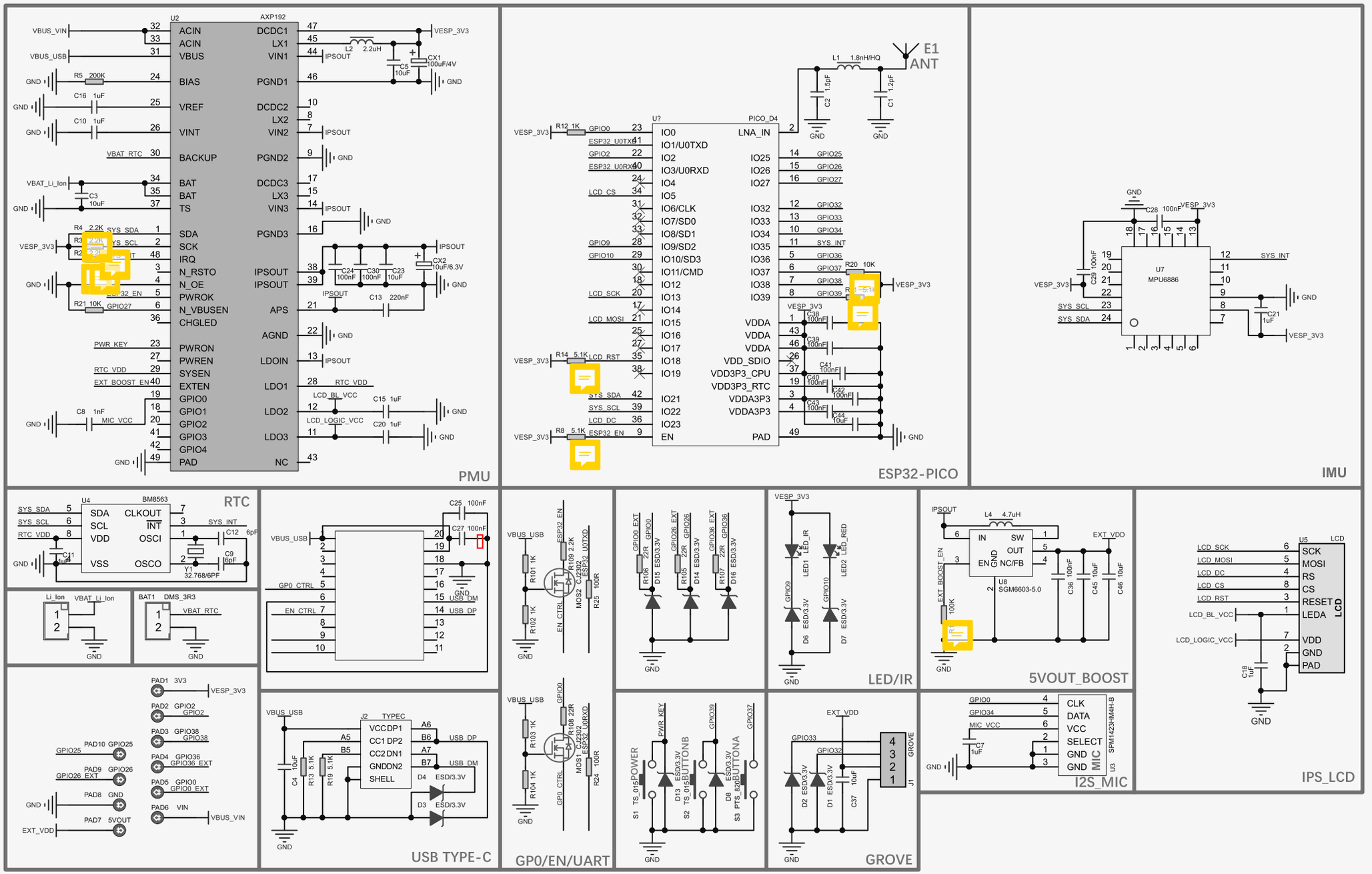
PMU
U2
AXP192
ACIN
ACIN
VBUS
BIAS
VREF
VINT
BACKUP
BAT
BAT
TS
SDA
SCK
IRQ
N_RSTO
N_OE
PWROK
N_VBUSEN
CHGLED
PWRON
PWREN
SYSEN
EXTEN
GPIO0
GPIO1
GPIO2
GPIO3
GPIO4
PAD
DCDC1
LX1
VIN1
PGND1
DCDC2
LX2
VIN2
PGND2
DCDC3
LX3
VIN3
PGND3
IPSOUT
IPSOUT
APS
AGND
LDOIN
LDO1
LDO2
LDO3
NC
VBUS_VIN
VBUS_USB
VBAT_RTC
VBAT_Li_Ion
PWR_KEY
RTC_VDD
EXT_BOOST_EN
MIC_VCC
VESP_3V3
ESP32_EN
GPIO27
SYS_SDA
SYS_SCL
LCD_BL_VCC
LCD_LOGIC_VCC
ESP32-PICO
U?
PICO_D4
IO0
IO1/U0TXD
IO2
IO3/U0RXD
IO4
IO5
IO6/CLK
IO7/SD0
IO8/SD1
IO9/SD2
IO10/SD3
IO11/CMD
IO12
IO13
IO14
IO15
IO16
IO17
IO18
IO19
IO21
IO22
IO23
EN
LNA_IN
IO25
IO26
IO27
IO32
IO33
IO34
IO35
IO36
IO37
IO38
IO39
VDDA
VDDA
VDDA
VDD_SDIO
VDD3P3_CPU
VDD3P3_RTC
VDDA3P3
VDDA3P3
PAD
E1
ANT
IMU
U7
MPU6886
RTC
U4
BM8563
SDA
SCL
VDD
VSS
CLKOUT
INT
OSCI
OSCO
USB TYPE-C
J2
TYPEC
VCCDP1
CC1 DP2
CC2 DN1
GNDDN2
SHELL
USB_DP
USB_DM
GP0/EN/UART
GROVE
LED/IR
5VOUT_BOOST
U8
SGM6603-5.0
I2S_MIC
MIC
IPS_LCD
U5
LCD
SCK
MOSI
RS
CS
RESET
LEDA
VDD
GND
PAD