HITACHI

TH | NO. S0007 E

RAS-09GZ1×3/RAM-20GW1
RAS-13GZ1
RAS-09GZ1×2 /RAM-30GW1

SERVICE MANUAL
TECHNICAL INFORMATION

FOR SERVICE PERSONNEL ONLY

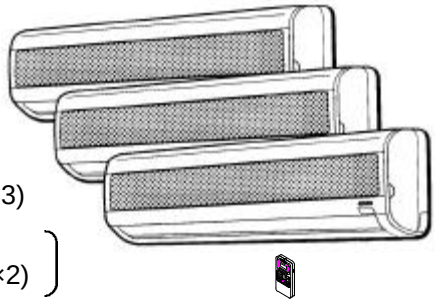

(RAS-09GZ1 ×3)

(RAS-13GZ1)
(RAS-09GZ1×2)

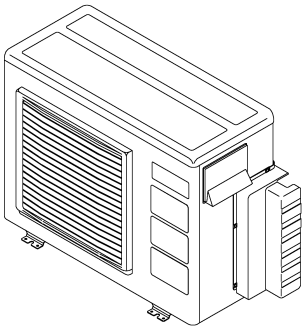

(RAM-20GW1)

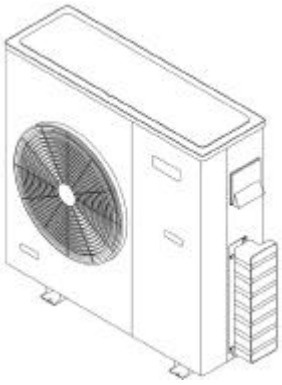

(RAM-30GW1)

REFER TO THE FOUNDATION MANUAL

SPECIFICATIONS.....7

HOW TO USE.....10

CONSTRUCTION AND DIMENSIONAL DIAGRAM.....21

MAIN PARTS COMPONENT.....23

WIRING DIAGRAM.....27

WIRING DIAGRAM OF THE PRINTED WIRING BOARD.....33

BASIC MODE.....37

AUTO SWING FUNCTION.....42

DESCRIPTION OF MAIN CIRCUIT OPERATION.....43

SERVICE CALL Q&A.....47

TROUBLE SHOOTING.....50

PARTS LIST AND DIAGRAM.....52

SPECIFICATIONS

TYPE		WALL TYPE			
		INDOOR UNIT	OUTDOOR UNIT	INDOOR UNIT	OUTDOOR UNIT
MODEL		RAS-09GZ1×3	RAM-20GW1	RAS-13GZ1 RAS-09GZ1×2	RAM-30GW1
POWER SOURCE		1ϕ,220-230V,50Hz			
TOTAL INPUT	(W)	1,850-1,925		3,405-3,606	
TOTAL AMPERES	(A)	8.5-8.5		16.2-16.0	
COOLING CAPACITY	(kW)	2.6 + 1.6×2		3.0 + 2.4×2	
	(B.T.U/h)	8,870 + 5460×2		10,240 + 8,190×2	
DIMENSIONS (mm)	W	823	810	823	890
	H	298	610	298	885
	D	179 (185)	350	179 (185)	285
NET WEIGHT	(kg)	8×3	61	8×3	80

After installation

SPECIFIATIONS AND PARTS ARE SUBJECT TO CHANGE FOR IMPROVEMENT

ROOM AIR CONDITIONER
INDOOR UNIT + OUTDOOR UNIT

FEBRUARY 2001

SAFETY DURING REPAIR WORK

1.In order to disassemble and repair the unit in question, be sure to disconnect the power cord plug from the power outlet before starting the work.

2.If it is necessary to replace any parts, they should be replaced with respective genuine parts for the unit, and the replacement must be effected in correct manner according to the instructions in the Service Manual of the unit.

If the contacts of electrical parts are defective, replace the electrical parts without trying to repair them.

3.After completion of repairs, the initial state should be restored.

4.Lead wires should be connected and laid as in the initial state.

5.Modification of the unit by user himself should absolutely be prohibeted.

6.Tools and measuring instruments for use in repairs or inspection should be accurately calibrated in advance.

7.In installing the unit having been repaired, be careful to prevent the occurrence of any accident such as electrical shock, leak of current, or bodily injury due to the drop of any part.

8.To check the insulation of the unit, measure the insulation resistance between the power cord plug and grounding terminal of the Unit. The insulation resistance should be 1 MÙ or more as measured by a 500V DC megger.

9.The initial location of installation such as window, floor or the other should be checked for being and safe enough to support the repaired unit again. If it is found not so strong and safe, the unit should be installed at the initial location reinforced or at a new location.

10.Any inflammable thing should never be placed about the location of installation.

11.Check the grounding to see whether it is proper or not, and if it is found improper, connect the grounding terminal to the earth.

PREVENTION 0F DAMAGE TO SEMICONDUCTORS

1.when carrying and handling semiconductors adopted in your model during maintenance and inspection thereof, much care should be taken to prevent the semiconductors from being damaged. Also, such care should be taken when handling any faulty model which is to be returned to factory.

2. The semiconductors used in your model are the following:
   (1) Micro computer
   (2) integrated circuits (IC)
   (3) Field-effect transistors (FET)
   (4) Printed circuit boards (PC boards) or the like on which the parts in (1) and (2) above are provided.

3.Cautions in handling

(1) Use a conductive container to carry or store the semiconductive parts. Even if they are faulty ones, also handle them using such container.

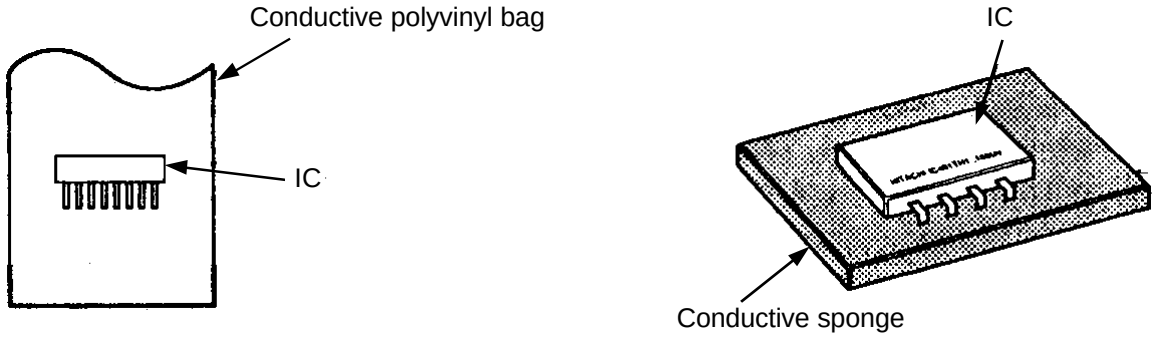

Fig. 1. Conductive Container

(2) when parts as uncovered are handled (for counting, packing or for the like purpose), the hadler must use his own body as conductor for earthing. For this purpose, put on an electrically conductive ring or bracelet at the wrist. Connect to the bracelet a conductor provided with a resistor of 1MÙ and at the other end with a clip for connection to the earth wire.

(3) Be careful not to have your clothes be in contact with any part while you are holding it, even if the body earthing is established.

(4) Be sure to place the parts on a grounded metallic plate.

(5) Never fail to disconnect the power supply before starting repair of any PC board. Then, proceed to the repair of the PC board on the grounded metallic plate.

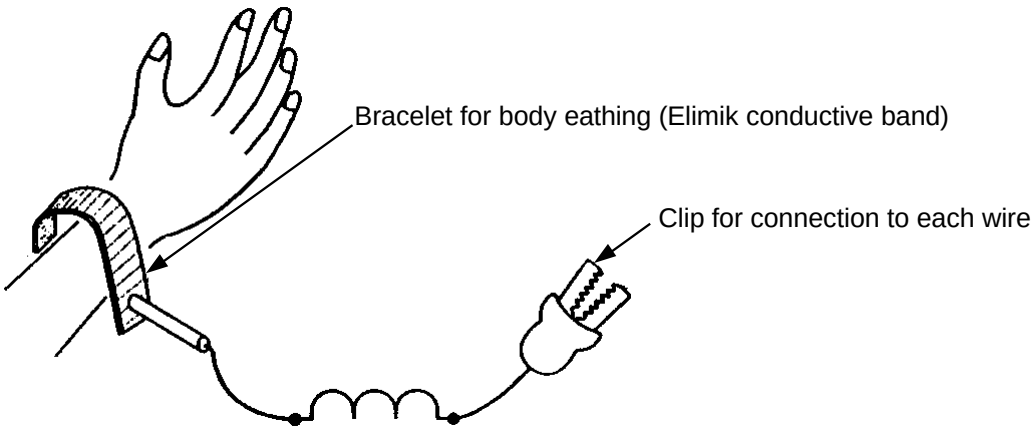

Fig. 2. Body Earthing

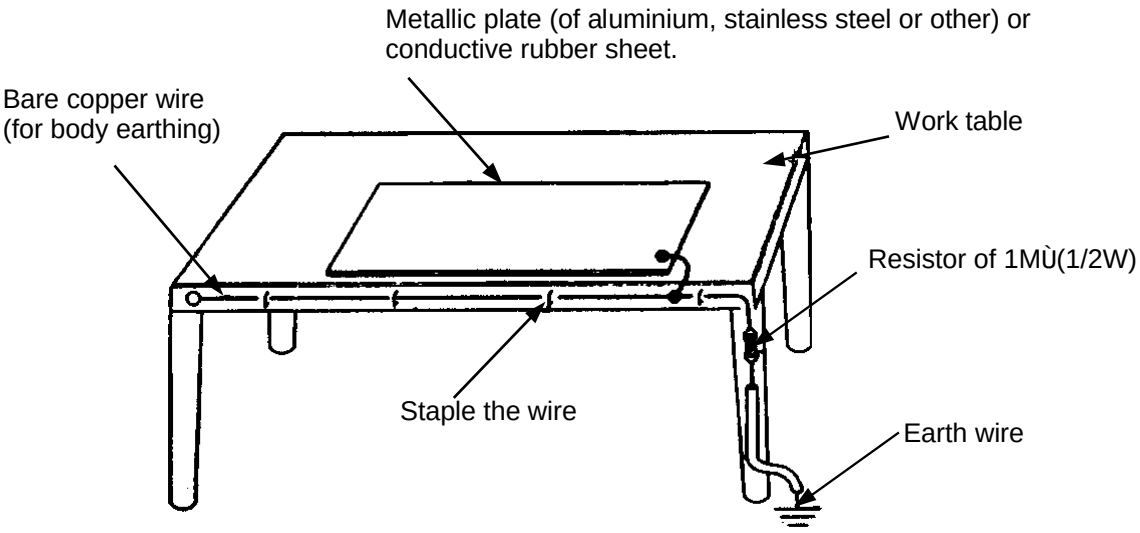

Fig. 3. Earthing of Work Table

(6) Soldering iron to be used should be a one with three wire (including an earth wire).

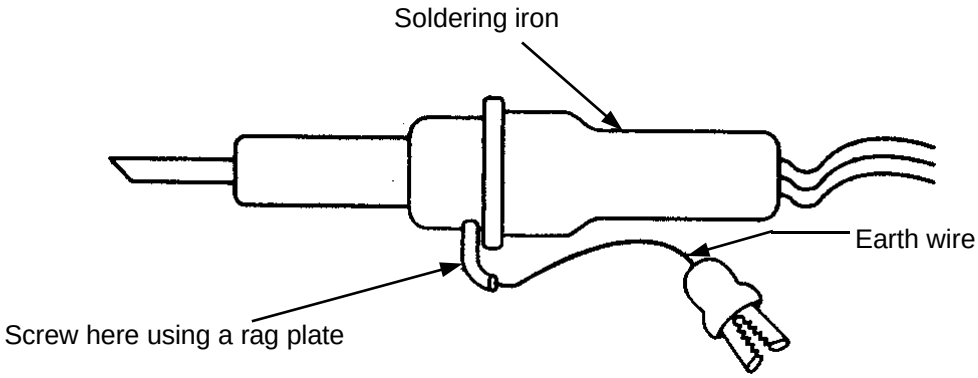

Fig.4.Earthing of Soldering Iron

An ordinary soldering iron may also be used, but in such case, be sure to provide a perfect insulation (10MÙor more to 100V).

(7) while checking the circuits during maintenance, inspection or the other, strictly avoid any shortcircuiting of the load circuit or other by the test probe of the measuring instrument.

NEW TECHNOLOGY

Cautions in relation to HFC(R407C)

1. Safety during Servicing

This air conditioner uses the new refrigerant HFC(R407C) for protecting the ozone layer. R407C has several different characteristic features from HCFC22(R22). Therefore keep the following care items during servicing for safety.

(1) Since the working pressure of R407C model is about 1.1 times higher than that of R22 model, it becomes necessary to use part of piping materials and servicing tools exclusive for R407C model.

(2) It is necessary to exercise more care to prevent the foreign matters (oil, moisture, etc.) from mixing into the piping than in the case of R22 model. Also, when storing the piping securely seal its openings with pinching and taping, etc..

(3) Be sure to charge the refrigerant from the liquid-phase side, as the liquid-phase/gas-phase-composition changes a little in the case of R407C model.

(4) Never use refrigerant other than R407C in an air conditioner which is designed to operate with R407C.

(5) If a refrigeration gas leakage occurs during servicing, be sure to ventilate fully.
If the refrigerant gas comes into contact with fire, a poisonous gas may occur.

(6) When installing or removing an air conditioner, do not allow air or moisture to remain in the refrigeration cycle. Otherwise, pressure in the refrigeration cycle may become abnormally high so that a rupture or personal injury may be caused.

(7) After completion of service work, check to make sure that there is no refrigeration gas leakage.
If the refrigerant gas leaks into the room, coming into contact with fire in the fan driven heater, space heater, etc., a poisonous gas may occur.

(8) When exchange compressor, it is necessary to change the dryer at the same time.

2.Refrigerant Piping Materials

Thickness of Refrigerant Piping Although the thickness is same as that for R22

Nominal	outside (mm)	thickness(mm)
1/4	6.35	0.7
3/8	9.52	0.7
1/2	12.70	0.7

3. Servicing tools

<New tools for R407C>

New tools for R407C	Applicable to R22 Model	Applicable to R410A Model	Changes
Gauge manifold	×	×	Use tools for R407C when port dia. is 1/4 flare.
Charge hose	×	×	
Weight measure before R407C be charged			As pressure is high and gasification speed is fast, it is difficult to read the indicated value by means of charging cylinder, as air bubbles occur.
Torque wrench		× (nominal diam. 1/2, 5/8)	Can share the tool for R22
Flare tool (clutch type)			
Gauge for projection adjustment			Used when performing flare processing by means of conventional flare tool.
Vacuum pump adapter			Connected to conventional vacuum pump.
Gas leakage detector	×		Exclusive for HFC refrigerant.

● R407C is mix with R32, R125 and R134a 3 types refrigerant

4. Servicing work (Refrigerant recharging)

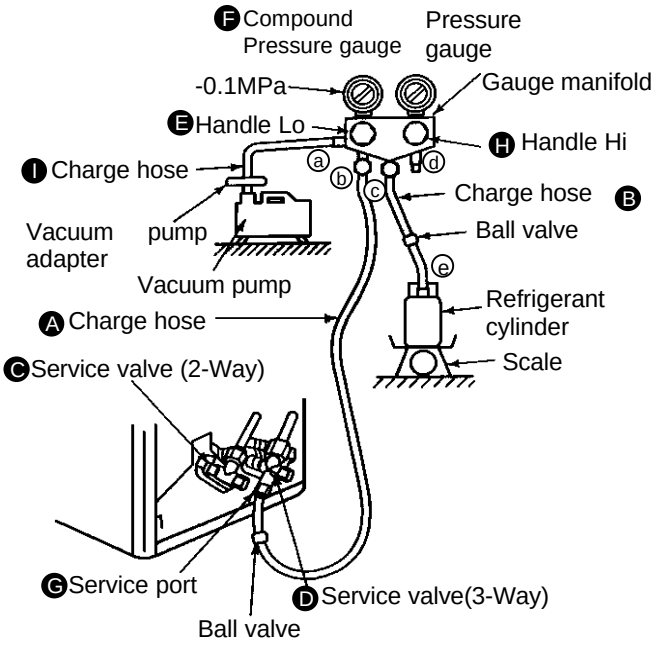

CAUTION

1. Be sure to use the vacuum pump, vacuum pump adapter and gauge manifold to refer to their instruction manuals beforehand.
2. Ascertain that the vacuum pump is filled with oil to the level designated on the oil gauge.
3. After closed the ball valve of change hose, it should be disconnected at service port side and refrigerant cylinder side at first.

   Next, after discharging the remained gas in the charge hose by opening the ball valve a little, disconnect it at gauge manifold side. You can prevent from being released the refrigerant suddenly by connecting the ball valve to service port. And you can work with more safety.

Working steps

1. Connect the charge hose A to outdoor unit.

⇩

2. Connect the vacuum pump adapter to the vacuum pump. Connect the 1/2" conversion adapter to the vacuum pump adapter. Connect the charge hose I to the conversion adapter.

⇩ Then, service valve C & D closed.

3. Connect the charge hose B to the refrigerant cylinder.

⇩

4. Open the handle Lo E

   Turn ON the power switch of the vacuum pump & adapter.

   Run the vacuum pump in specified time.

5. When the compound pressure gauge's pointer has indicated -0.1 Mpa, place the handle E to in the fully closed position.

   Turn OFF the power switch of the vacuum pump & adapter.

⇩

6. Remove the charge hose I of vacuum pump at portion a

⇩

7. Air purge of gauge manifold.
   - Open the refrigerant cylinder's valve and push the valve core at portion a of gauge manifold. Then the refrigerant is discharge in a moment.

⇩

8. Calculation of charged refrigerant amount.

⇩

9. Charging of refrigeration.
   - Open the handle Lo E in a turn and charge the designated amount.

⇩

10. Completion of charging.

⇩

11. Be closed the valve of charge hose A

⇩

12. Run the compressor at cooling operation.

⇩

13. Remove the charge hose A & B
    - Remove the charge hose A from portion G
    - Remove the charge hose B from portion e

⇩

14. Attach the caps.

⇩

15. Gas leakage check.

5. Saturated Temperature and Saturated Pressure table of R407C model

Temperature ( )	Saturated pressure (MPa)	
	Saturated liquid	Saturated gas
-10	0.3063	0.2182
-9	0.3208	0.2305
-8	0.3357	0.2431
-7	0.3510	0.2562
-6	0.3667	0.2696
-5	0.3828	0.2834
-4	0.3993	0.2977
-3	0.4163	0.3123
-2	0.4337	0.3273
-1	0.4515	0.3427
0	0.4698	0.3586
1	0.4885	0.3749
2	0.5077	0.3916
3	0.5274	0.4088
4	0.5475	0.4265
5	0.5681	0.4446
6	0.5892	0.4632
7	0.6108	0.4822
8	0.6329	0.5018
9	0.6556	0.5219
10	0.6787	0.5424
11	0.7024	0.5635
12	0.7266	0.5851
13	0.7513	0.6073
14	0.7766	0.6299
15	0.8025	0.6532
16	0.8289	0.6770
17	0.8559	0.7013

Temperature ( )	Saturated pressure (MPa)	
	Saturated liquid	Saturated gas
18	0.8835	0.7263
19	0.9117	0.7518
20	0.9407	0.7779
21	0.9697	0.8047
22	1.0000	0.8320
23	1.031	0.8600
24	1.062	0.8886
25	1.094	0.9177
26	1.126	0.9477
27	1.159	0.9787
28	1.193	1.010
29	1.228	1.032
30	1.263	1.075
31	1.299	1.108
32	1.335	1.142
33	1.373	1.177
34	1.411	1.212
35	1.449	1.239
36	1.489	1.286
37	1.529	1.323
38	1.570	1.362
39	1.611	1.401
40	1.654	1.442
41	1.697	1.483
42	1.741	1.525
43	1.785	1.567
44	1.831	1.611
45	1.877	1.655

SPECIFICATIONS

MODEL RAS-09GZ1×3/RAM-20GW1

MODEL		RAS-09GZ1×3	RAM-20GW1
FAN MOTOR		8W	40W
FAN MOTOR CAPACITOR		1ìF, 450V	2.3ìF, 450V
FAN MOTOR PROTECTOR		YES	YES
COMPRESSOR		NO	GK516S1Z×2
COMPRESSOR MOTOR CAPACITOR		NO	40ìF, 400V
OVER HEAT PROTECTOR		NO	NO
OVERLOAD RELAY		NO	YES
FUSE (for MICRO COMPUTER)		2A	2.5A
FUSE		NO	NO
POWER RELAY		JM1AN	NO
POWER SWITCH		YES	NO
TEMPORARY SWITCH		YES	NO
SERVICE SWITCH		NO	NO
TRANSFORMER		YES	YES
VARISTOR		470NR	470NR
NOISE SUPPRESSOR		NO	NO
THERMOSTAT		YES (IC)	NO
SOLID STATE RELAY FOR FAN		ALD-112	NO
REMOTE CONTROLLER (LIQUID CRYSTAL)		YES	NO
FUSE CAPACITY		15A TIME DELAY FUSE	
REFRIGERANT CHARGING VOLUME (R407C)	UNIT		A : 830g B : 1000g
	REFER TO Page. 9	WITHOUT REFRIGERANT BECAUSE COUPLING IS FLARE TYPE. P-103VK1(3m), P-105VK1(5m), P-108VK1(8m)	
PRODUCED BY.		TAINICHI	

A : RAS-09GZ1 (No.1)

B : RAS-09GZ1 (No.2 No.3)

SPECIFICATIONS

MODEL RAS-13GZ1 / RAM-30GW1
RAS-09GZ1×2

MODEL		RAS-13GZ1	RAS-09GZ1×2	RAM-30GW1
FAN MOTOR		10W	8W	75W
FAN MOTOR CAPACITOR		1ìF, 450V	1ìF, 450V	4ìF, 500V
FAN MOTOR PROTECTOR		YES	YES	YES
COMPRESSOR		NO	NO	A : 4KS210DAA B : 4KS340DAA
COMPRESSOR MOTOR CAPACITOR		NO	NO	A : 35ìF, 400V B : 60ìF, 400V
OVER HEAT PROTECTOR		NO	NO	NO
OVERLOAD RELAY		NO	NO	YES
FUSE(for MICRO COMPUTER)		2A	2A	2.5A
FUSE		NO	NO	NO
POWER RELAY		JM1aN	JM1aN	NO
POWER SWITCH		YES	YES	NO
TEMPORARY SWITCH		YES	YES	NO
SERVICE SWITCH		NO	NO	NO
TRANSFORMER		YES	YES	YES
VARISTOR		470NR	470NR	470NR
NOISE SUPPRESSOR		NO	NO	NO
THERMOSTAT		YES (IC)	YES (IC)	NO
SOLID STATE RELAY FOR FAN		ALD-112	ALD-112	NO
REMOTE CONTROLLER (LIQUID CRYSTAL)		YES	YES	NO
FUSE CAPACITY		25A TIME DELAY FUSE		
REFRIGERANT CHARGING VOLUME (R407C)	UNIT			A : 850g B : 1070g
	REFER TO Page. 9	WITHOUT REFRIGERANT BECAUSE COUPLING IS FLARE TYPE. P-103VK1(3m), P-105VK1(5m), P-108VK1(8m)		
PRODUCED BY.		TAINICHI		

A : RAS-13GZ1 (No.1)
B : RAS-09GZ1 (No.2 No.3)

PIPE LENGTH AND REFRIGERANT CHARGING VOLUME

1. Compressor-1 Indoor unit cycle (RAS-09GZ1/RAM-20GW1 or RAS-13GZ1/RAM-30GW1)

ÿThe pipe length should be a maximum of 20 m.

ÿCharging with refrigerant is not required for a pipe with a length of up to 8m. When the pipe length exceeds 8m, charge with 10g of refrigerant for each 1 m over 8 m.

PIPE LENGTH BETWEEN THE INDOOR UNIT AND OUTDOOR UNIT.	CHARGING VOLUME
UP TO TOTAL LENGTH 8 m.	PRECHARGING VOLUME TO OUTDOOR UNIT.
EXCEEDS 8 m (UP TO TOTAL LENGTH 20 m).	ADD EXTRA REFRIGERANT IN RATIO OF 10g FOR EACH 1 m IN EXCESS 8 m(See Fig.5)

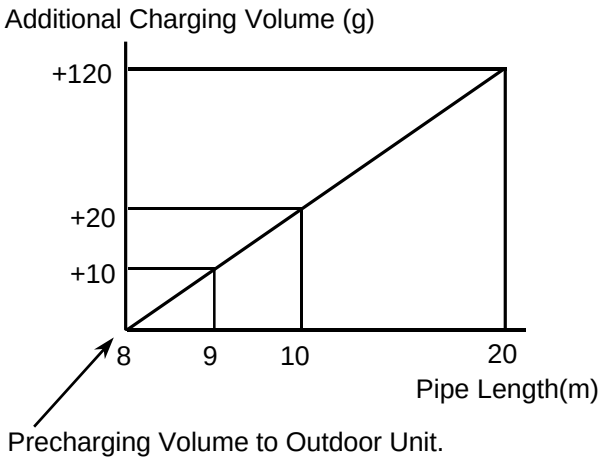

Fig.5

2. Compressor-2 Indoor unit cycle (RAS-09GZ1×2/RAM-20GW1 or RAS-09GZ1×2/RAM-30GW1)

ÿThe total pipe length when connecting 2 indoor units should be a maximum of 20 m.

<Example>

	RAS-09GZ1 (No.2)	RAS-09GZ1 (No.3)	Judgement
Pipe length	5 m	15 m	Acceptable
	10 m	10 m	Acceptable
	3 m	17 m	Rejected

ÿIn any case, charging with refrigerant is not required.

Note :

ÿIf refrigerant recharge is required during service, be sure to turn on the unit when refrigerant discharging-vacuum drawing-refrigerant recharging work to ensure an accurate vacuum degree because there is an solenoid check valve at pipe system.

HOW TO USE

INDOOR UNIT CONTROL PANEL

- **Hold both sides of the suction grille and lift it up to open it.**
- **After the work is finished, slightly lift the suction grille and then close it.**
- **TEMPORARY SWITCH WITH AUTO RESTART**

  Use this switch to start and stop when the remote controller does not work, or when the operation is done using the temporary switch with auto restart after the power source is turned off and is turned on again, the operation is done in automatic mode. Normally do not use this button.
- **POWER SWITCH**

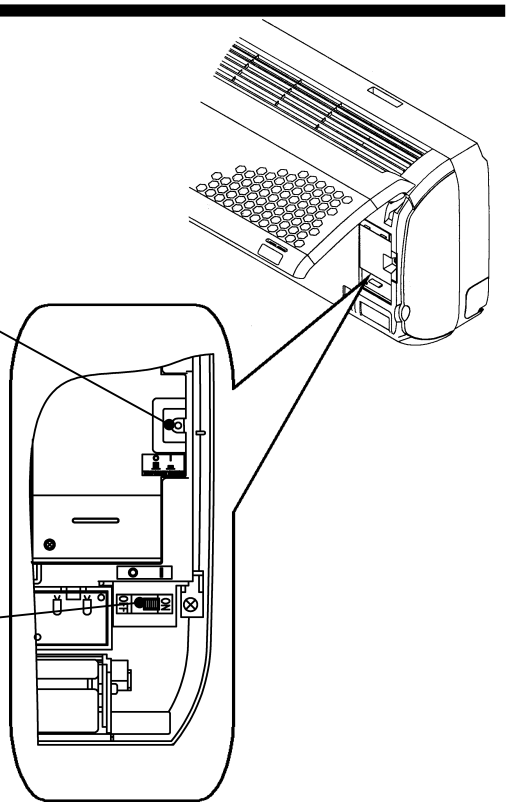

INDOOR UNIT INDICATORS

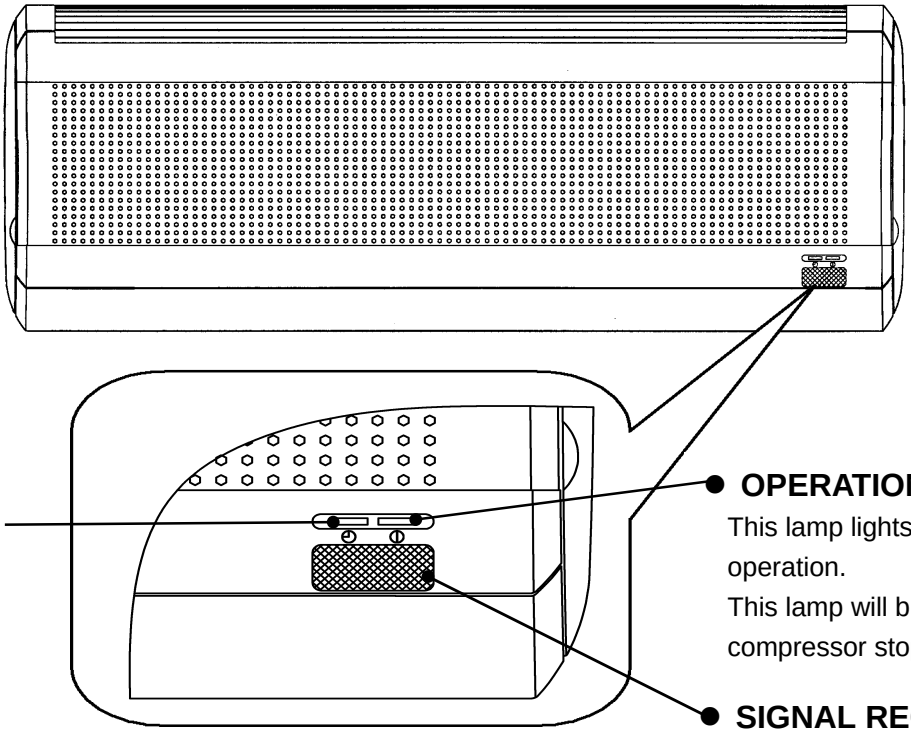

- **TIMER lamp**
  This lamp lights when the timer is working.
- **OPERATION lamp**
  This lamp lights during operation.
  This lamp will blink when compressor stops operating
- **SIGNAL RECEIVER**
  There will be a beep sound when this receiver receive signal from remote controller.

NAMES AND FUNCTIONS OF REMOTE CONTROLLER

This controls the operation function and timer setting of the room air conditioner. The range of control is about 4 meters. If indoor lighting is controlled electronically, the range of control may be shorter.

Signal Transmission

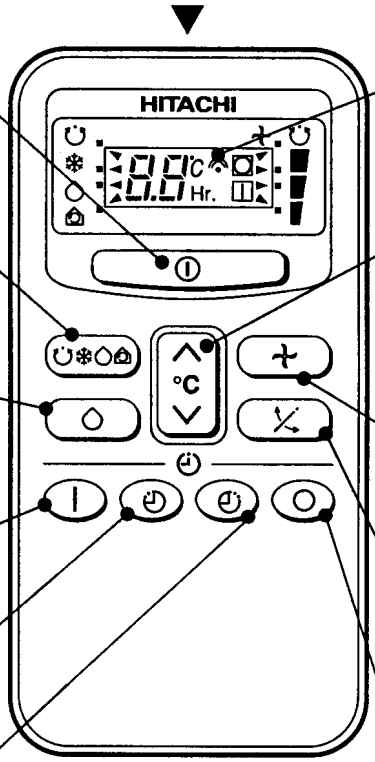

START/STOP Button
Press this button to start operation.
Press it again to stop operation.

FUNCTION Button
Select the operation mode.

DEHUMIDIFY Button
Dehumidify mode direct selection.

Reserve Button
Timer setting reservation.

OFF TIMER Button
Select the turn OFF time.

ON TIMER Button
Select the turn ON time.

Transmission Sign
The transmission sign blinks.
When a signal has been

TEMPERATURE Button
Room temperature setting.
Value will change more quickly when keep pressing.

FAN SPEED Button
Select the fan speed for cooling and circulation mode.

AUTO SWING Button
Control the angle of the horizontal air deflector.)

CANCEL Button
Cancel timer reservation.

	AUTO
	COOL
	DEHUMIDIFY
	CIRCULATION
	START/STOP
	FAN
	AUTO SWING
	START(RESERVE)
	OFF TIMER SET
	ON TIMER SET
	STOP(CANCEL)
	TIMER SET
	FAN SPEED HI MED LOW

Precautions for Use

- Do not put the remote controller in direct sunlight and high temperature.
- Do not drop it on the floor, and protect it from water.
- If you press the **FUNCTION** selector button during operation, the air conditioner may stop for about 3 minutes for protection before you can start it again. (unless you turn off and on again the power source)

You can use the remote controller by fixing it on the wall with the accessory parts.

- Before fixing it, make sure the unit can be controlled by the remote controller at the fixing position.

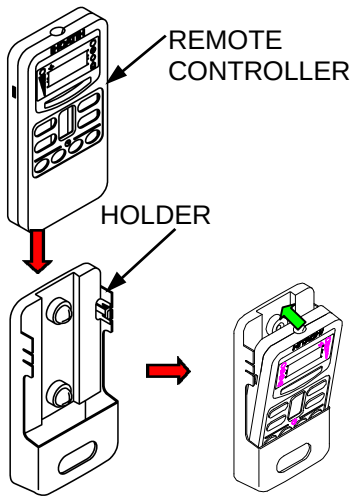

AUTOMATIC OPERATION

The device will automatically determine the operation mode either COOL or DEHUMIDIFY, depending on the initial room temperature.

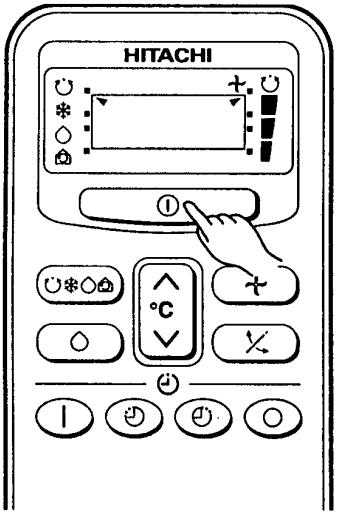

1 Press the (ON/OFF) button

- Operation start with a “beep”sound.

STOP Press the (ON/OFF) button

- Please make sure you have been selected the (Automatic) mode by use the (FUNCTION) Button.
- The fan speed selector does not work at this operation.

You can slightly adjust the room temperature.

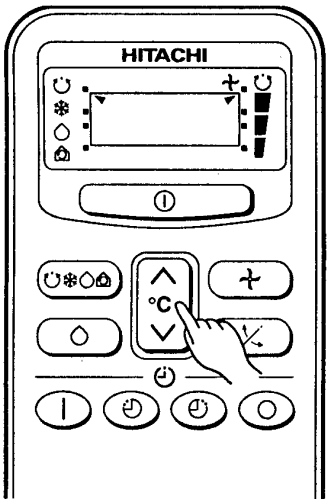

1 Press the (TEMPERATURE) button

- Temperature setting change by 1 for each 1 time press.

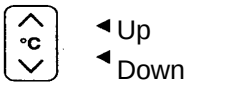

- You can raise or lower the temperature setting by a maximum of 3 .
- The display does not indicate the preset temperature in the Automatic mode. Device will receive the setting by a “beep”.

CONDITION OF AUTOMATIC OPERATION

The selected mode of operation will not change during the operation even though the room temperature change.

INITIAL ROOM TEMPERATURE (APPROX.)	FUNCTION	TEMPERATURE SETTING	FAN SPEED
Over 25 →	COOL	25	HIGH at start, LOW after the preset temperature is reached
16~25 →	DEHUMIDIFY	23	LOW
Under 16 →			OFF

ENERGY SAVE DEHUMIDIFYING OPERATION

Use the device for dehumidifying when the room temperature is over 16 .

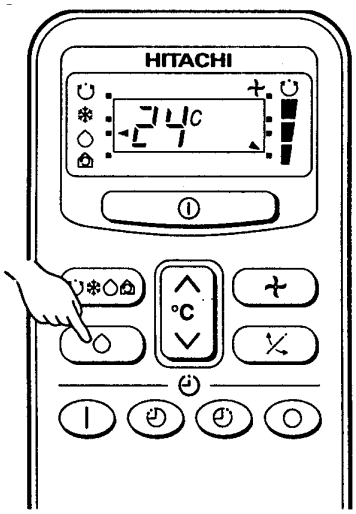

1 Press the HUMIDIFY) button

- Operation start with a “beep” sound.

STOP ress the T/STOP) button

- when you want to change the operation mode, please use the **ICTION)** Button.
- Set the desired temperature is available.
- You also can use the function mode button to select this operation.

CIRCULATION OPERATION

when the room temperature is higher than the thermostat set temperature, only the fan operates to circulate the upper hotter air downwards. This makes temperature distribution of the room evenly at heating.

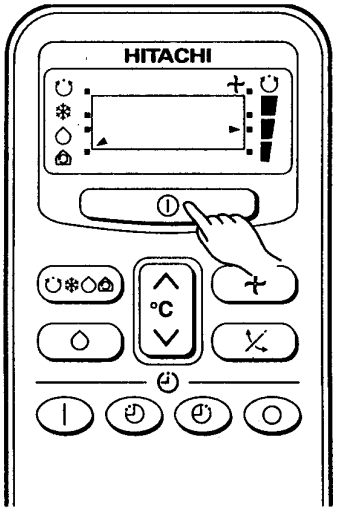

1 Press the RT/STOP) button

- Operation start with a single received sound “beep”.
- **STOP s the STOP) button**
- Make sure you have been select the irculate) mode by using the **ICTION)** Button.
- You can select the fan speed and desired temperature.
- This operation is useful in winter when using other heating equipment.

MANUAL OPERATION [Cooling • Dehumidify • Circulation]

Please use under below condition when you want to set the function mode, room temperature and fan speed by manually.

DEHUMIDIFYING	COOLING
Room Temperature	Outdoor Temperature
16 above	22-42

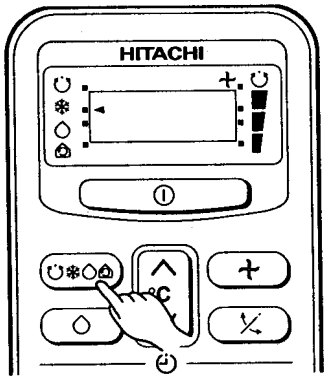

1 OPERATION MODE SELECTION

- Every time you press the button, the mode will change as the below sequence.

(Auto) (Cool) (Dehumidify) (Circulation)

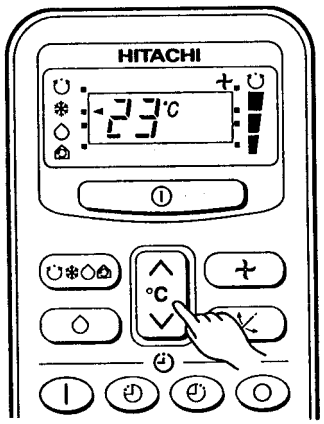

2 TEMPERATURE SETTING

◄ Up
◄ Down

Recommend Temperature

Dehumidify	16~26
Cooling	25~28

- The cooling operation does not start if the temperature setting is higher than the current room temperature.

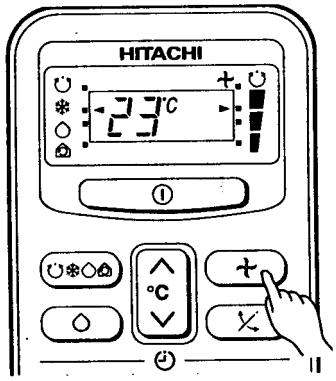

3 FAN SPEED SETTING

- Every time you press the button, fan speed will change as the below sequence.

- **COOLING**
  CIRCULATION } **: AUTO HIGH MED LOW**

- **DEHUMIDIFY : LOW(FIXED)**

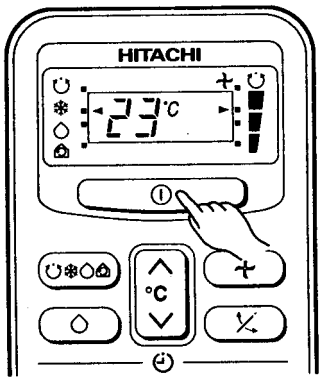

4 Press the (START/STOP) button

- Operation start with a signal received sound “beep”.

STOP Press the (START/STOP) button

- As the settings are stored in memory in the remote controller, you only have to press the (Start/Stop) button next time.

TIMER RESERVATION

ON Timer and 0FF Timer are available.

OFF Timer Reservation

Operation stop at setting time

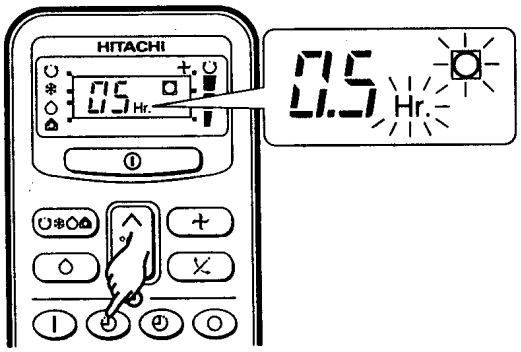

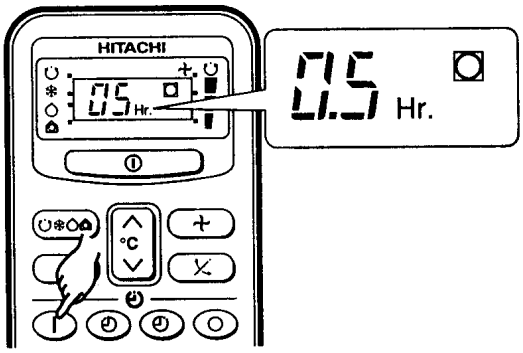

1 OFF TIMER setting

- Select the OFF TIMER by pressing the Button.
- Setting time will change according to the below sequence when you press the button.

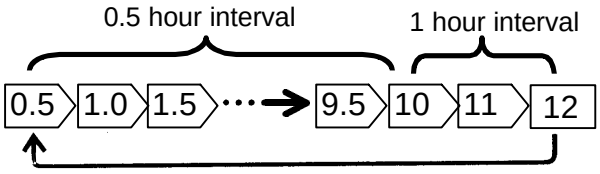

- The value change more quickly if you keep pressing the button.

2 Press the serve) button

- OFF TIMER reserved with a signal received sound "beep".
- The 0FF) Mark starts lighting instead of blinding.

ON Timer Reservation

Operation will start for setting temperature at setting time (The starting time may different depend on the room temperature and set temperature).

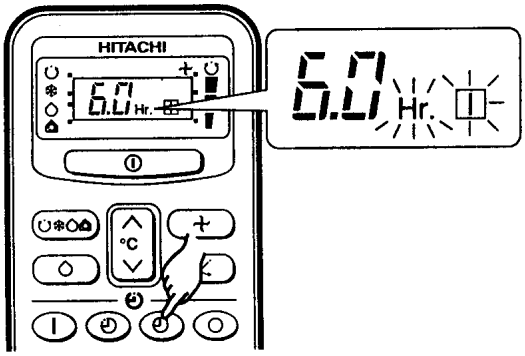

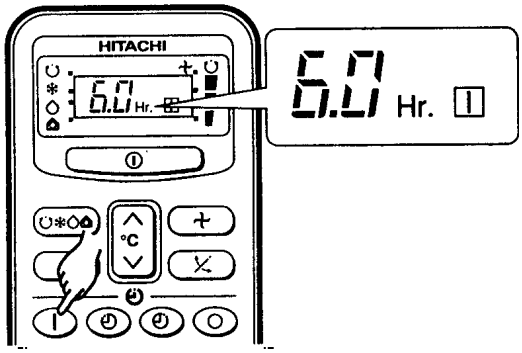

1 ON TIMER setting

- Select the ON TIMER by pressing the Button.
- At the beginning of setting, time 6 hours was set.
- Setting time will change according to the below sequence.

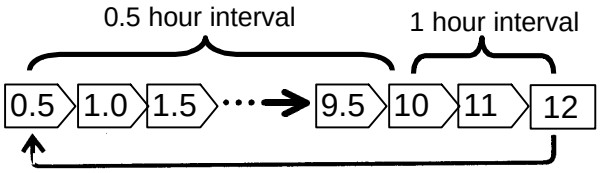

- The value change more quickly if you keep pressing the button.

2 Press the serve) button

- ON TIMER reserved with a signal received sound "beep".
- The ON) Mark starts lighting instead of blinding.

CANCELLATION OF Timer Reservation

1 Press the ncel) button

- As the time settings are stored in remote controller memory, you only have to press the (Reserve) button in order to use the same setting next time.

ADJUSTING THE AIR DEFLECTOR

1 Adjustment of the conditioned air in the upward and downward directions.

According to Dehumidifying or Cooling operation, the horizontal air deflector is automatically set to the proper angle suitable for each operation. The deflector can be swung up and down and also set to the desired angle using the (AUTO SWING) bu ⤫ı. (If the angle of the deflector is changed, it will not return to the auto-set position after operations start unless the operation mode is switched).

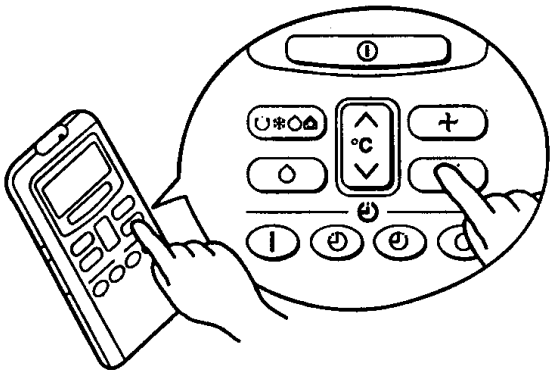

- If the ⤫ (AUTO SWING) button is pressed once, the horizontal air deflector swings up and down. If the button is pressed again, the deflector stops in its current position. Several seconds (about 12 seconds) may be required before the deflector starts to move.
- Swinging the air deflector is effective to reduce unevenness of the temperature in the room.
- In Cooling operation, do not keep the horizontal air deflector swinging for a long time. Some dew may form on the horizontal air deflector and some dew drops may fall from it.
- When the ⤫ (AUTO SWING) button is pressed while the operation is stopped, the horizontal air deflector moves and stops at the position where the air outlet closes.

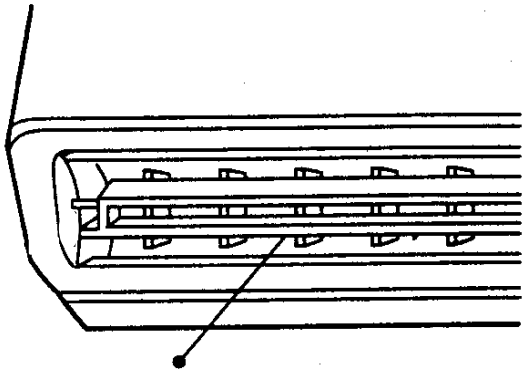

2 Adjustment of the conditioned air to the left and right.

Hold the vertical air deflector as shown in the figure and adjust the conditioned air to the left and right.

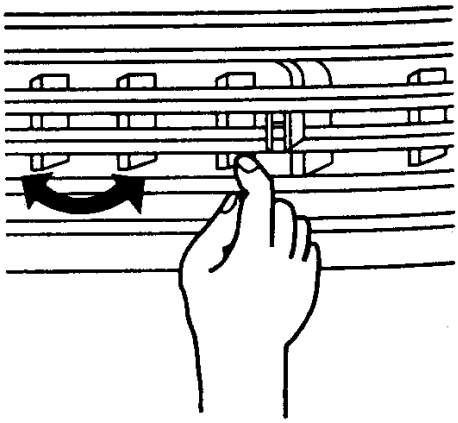

HOW TO EXCHANGE THE BATTERIES IN THE REMOTE CONTROLLER

1 Remove the cover as shown in the figure and take out the old batteries.

2 Install the new batteries.
The direction of the batteries should match the marks in the case.

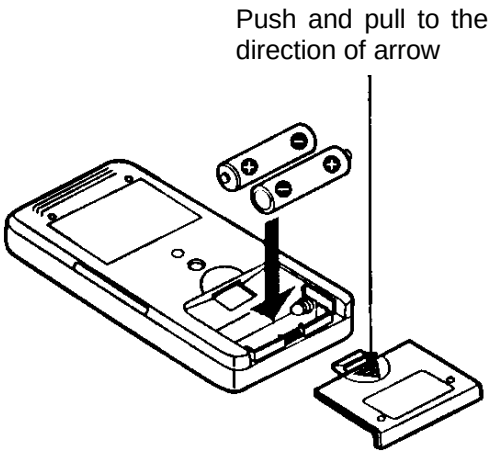

CAUTION

1. Do not use new and old batteries, or different kinds of batteries together.
2. Take out the batteries when you do not use the remote controller for 2 or 3 months.
3. The batteries must be of the LR03 type.

TEMPORARY SWITCH WITH AUTO RESTART

Use the temporary switch with auto restart when operation can not be done with the remote controller.

1. By pressing the temporary switch with auto restart, the operation is done in previously set operation mode.

   When the operation is done using the temporary switch with auto restart after the power source is turned off and is turned on again, the operation is done in automatic mode.

2. When the operation is stopped or when the operation is done with the remote controller again, press the temporary switch once again.
3. Because the temporary switch has the function of auto restart, the power will be supplied again after power stoppage.

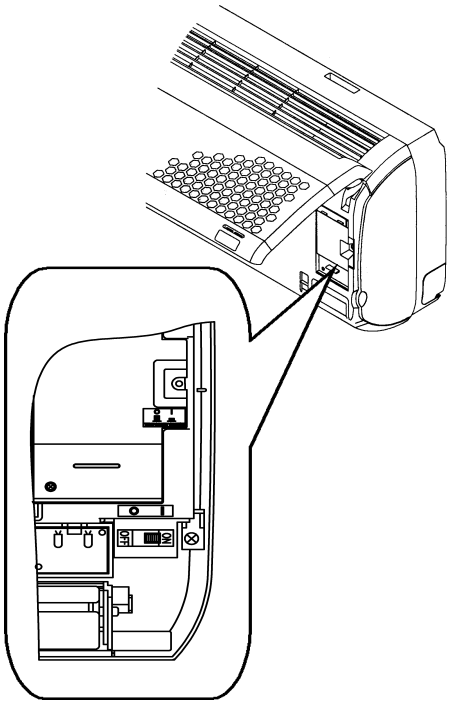

NOTE

Although the Temporary switch with auto restart has been at “ON” position, you can also use the remote controller to make further setting.

POWER SWITCH

When you do not use the room air conditioner, set the power switch to “O”(OFF).

MAINTENANCE

CAUTION

Before the cleaning, stop operation and disconnect the power supply.

Clean the air filter, as it removes dust inside the room. It should be washed when Air conditioner be used more than one month. In case the air filter is full of dust, the air flow will decrease and the cooling capacity will be reduced. Further, noise may occur. Be sure to clean the filter following the procedure below.

Procedure

1 Remove the filter.

- Hold both sides of the suction grill and lift it up to open it.(Until the fixed position)
- Slightly lift the filter and release the claws(2 locations)at the lower part of the front cover and remove the filter from the lower side.

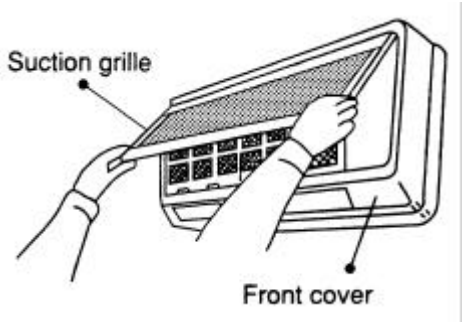

2 Remove dust from the filter using a vacuum-cleaner.
If there is too much dust, use neutral detergent.
After using neutral detergent, wash with clean water and dry in the shade.

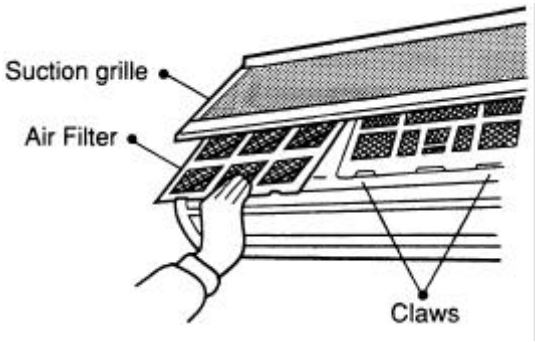

3 Install the filters.
Slightly lift the suction grille and close as original state.

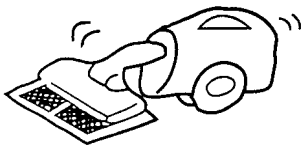

CAUTION

- Do not wash with hot water at more than 40 . The filter may shrink.
- When washing it, shake off moisture completely and dry it in the shade; do not expose it directly to the sun. The filter may shrink.
- Do not operate the air conditioner with the filter removed. Dust may enter the air conditioner and cause trouble.

CLEANING OF FRONT COVER, ETC.

1.The front cover easily becomes dirty. Wipe it with a soft dry cloth.
2.When it is excessively dirty, wipe with a soft cloth soaked in lukewarm water or neutral detergent. Then wipe thoroughly with a soft dry cloth.
3.Never use hot water (above 50), benzine, gasoline, acid, thinner or a brush, because they will damage the plastic surface and the coating.

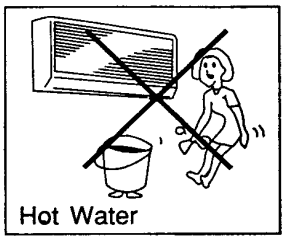

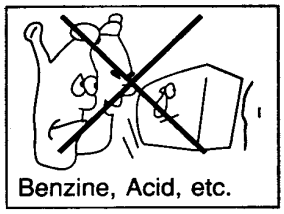

MAINTENANCE AT BEGINNING OF LONG OFF PERIOD

1.Running the unit setting the operation mode to :AN)
and the fan speed to HI for about half a day on a fine day,
and dry the whole of the unit.

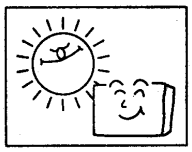

WHEN ASKING FOR SERVICE, CHECK THE FOLLOWING POINTS.

WHEN IT DOES NOT OPERATE

1.Is the fuse all right?
2.Is the voltage extremely high or low?
3.Is the power switch ON ?

WHEN IT DOES NOT COOL WELL

1.Is the air filter blocked with dust?
2.Does sunlight fall directly on the outdoor unit?
3.Is the air flow of the outdoor unit obstructed?
4.Are the doors or windows opened, or is there any source of heat in the room?
5.Is the set temperature suitable?

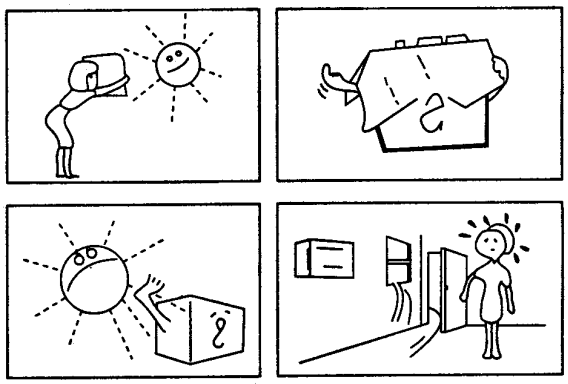

Notes

- In quiet operation or stopping the running, the following phenomena may occasionally occur, but they are not abnormal for the operation.

  (1) Slight flowing noise of refrigerant in the refrigerating cycle.

  (2) Slight rubbing noise from the fan casing which is cooled and then gradually warmed as operation stops.

- The odor will possibly be emitted from the room air conditioner because the various odor, emitted by smoke, foodstuffs, cosmetics and so on, sticks to it. So please clean the air filter and the evaporator at the beginning of the season to reduce the odor.

This product conforms with the protection requirements of council directives 89/336/EEC relating to electromagnetic compatibility.

Please note:
On switching on the equipment, particularly when the room light is dimmed, a slight brightness fluctuation may occur. This is of no consequence.
The conditions of the local Power Supply Companies are to be observed.

HOW TO EXCHANGE THE AIR PURIFYING FILTER

1 Open the frame by releasing the claws from the filter holes.

2 Place the new air purifying filter and attach the frame back to the filter.

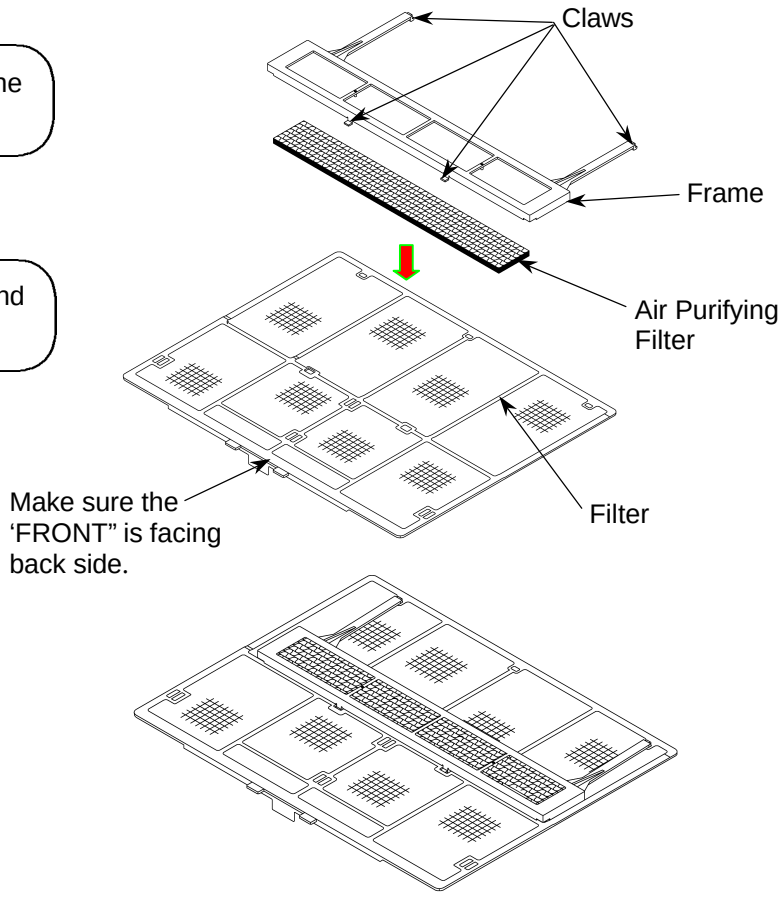

NOTE:

- This model has an air purifying filter. The cooling capacity is slightly weakened and the cooling speed becomes slower when the air purifying filter is used. So, set the fan speed to "HIGH" when using it in this condition.
- Recommended to replace the air purifying filter after every 3 months for normal usage. Type number for this air purifying filter is <SPX-CFH5>. Please use this number for ordering when you want to renew it.

CONSTRUTION AND DIMENSIONAL DIAGRAM (Indoor Unit)

MODEL RAS-09GZ1
RAS-13GZ1

mm(inch)

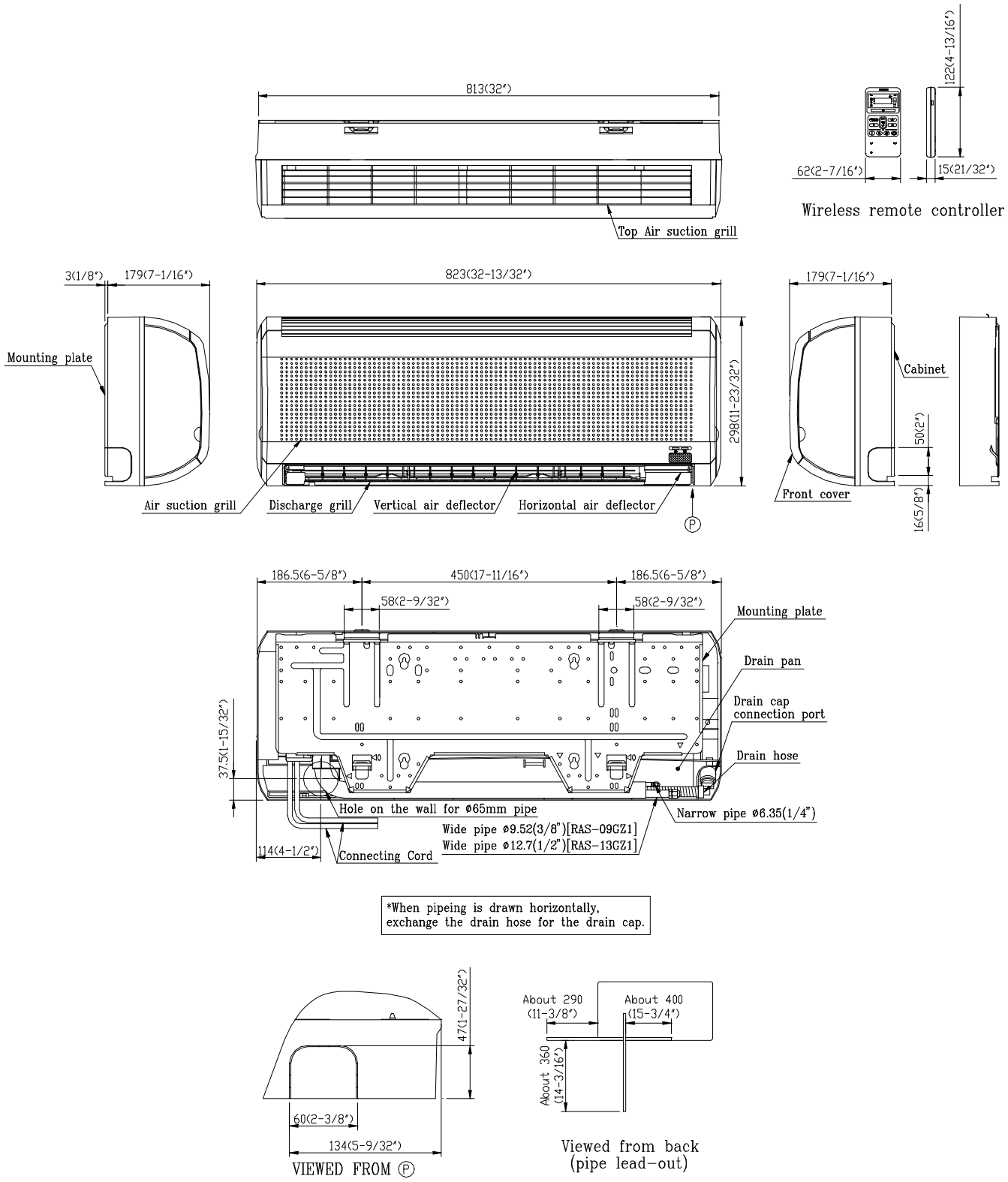

CONSTRUTION AND DIMENSIONAL DIAGRAM (Outdoor Unit)

MODEL RAM-20GW1

mm(inch)

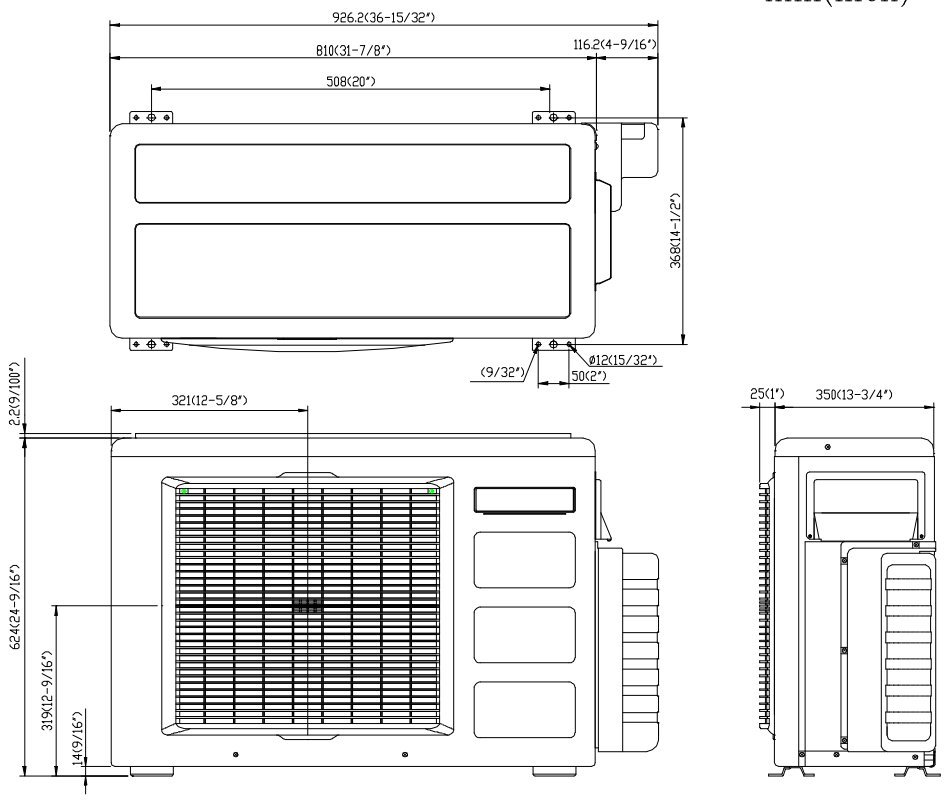

MODEL RAM-30GW1

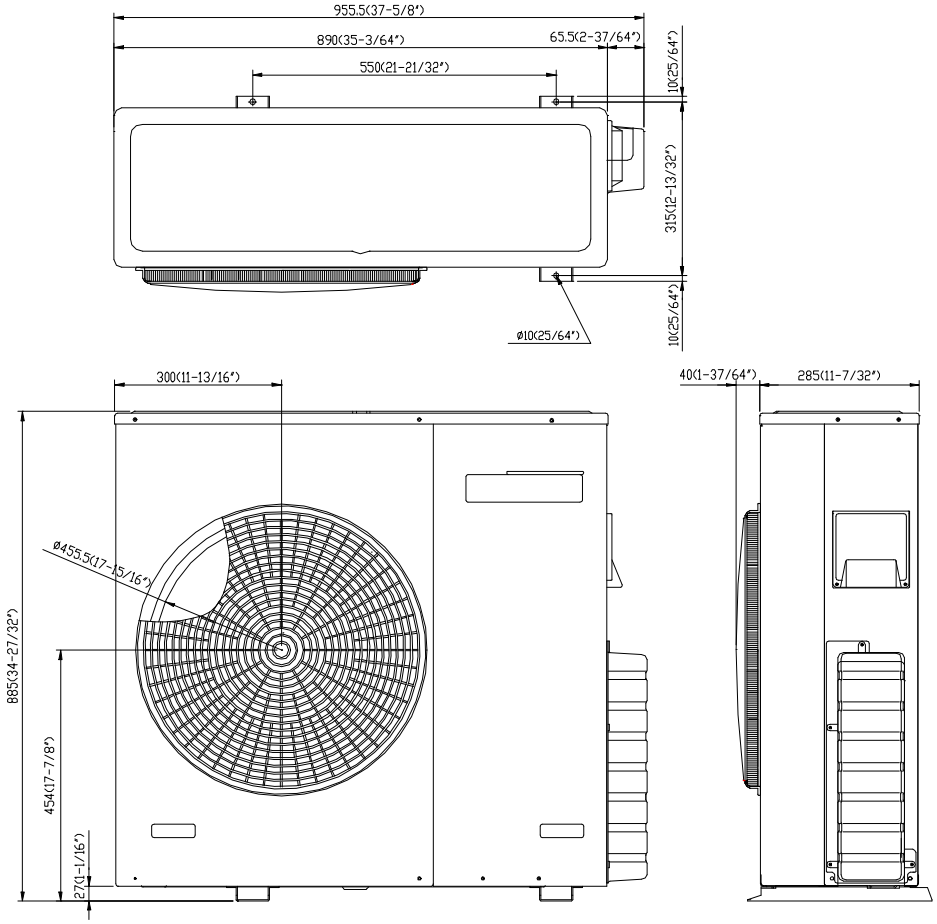

MAIN PARTS COMPONENT

MODEL RAS-09GZ1 x 3 / RAM-20GW1

THERMOSTAT

Thermostat Specifications

MODEL			RAS-09GZ1 x 3
THERMOSTAT MODEL			IC
TEMPERATURE ( )	INDICATION 16	ON	17.0 (62.6)
		OFF	16.3 (61.3)
	INDICATION 24	ON	25.0 (77.0)
		OFF	24.3 (75.7)
	INDICATION 32	ON	33.0 (91.4)
		OFF	32.3 (90.4)

FAN MOTOR

Fan Motor Specifications

MODEL		RAS-09GZ1	RAM-20GW1
PHASE		SINGLE	
RATED VOLTAGE		220 - 230V	
RATED FREQUENCY		50Hz	
OUT PUT		8W	40W
POLE NUMBER		4	4
CONNECTION		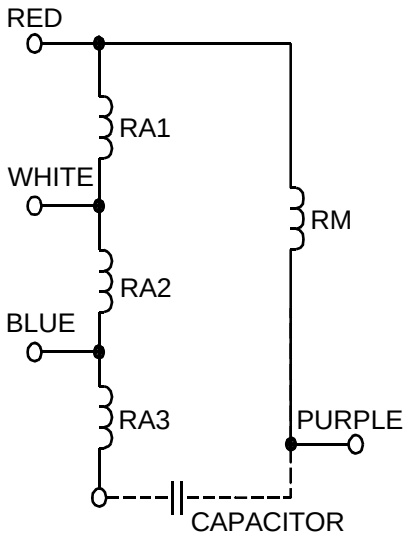	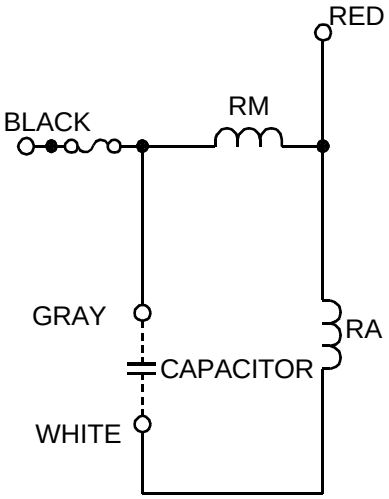
RESISTANCE VALUE (Ù)	20 (68)	RM=605 RA2=57 RA1=77 RA3=249	RA=146.2 RM=92.1
	75 (167)	RM=735.5 RA2=69.3 RA1=93.6 RA3=302.7	RA=177.7 RM=112.0

COMPRESSOR

Compressor Motor Specifications

MODEL		RAM-20GW1
COMPRESSOR MODEL		GK516S1Z x 2
PHASE		SINGLE
RATED VOLTAGE		220 - 240V
RATED FREQUENCY		50Hz
LOCKED ROTOR CURRENT		22A
POLE NUMBER		2
CONNECTION		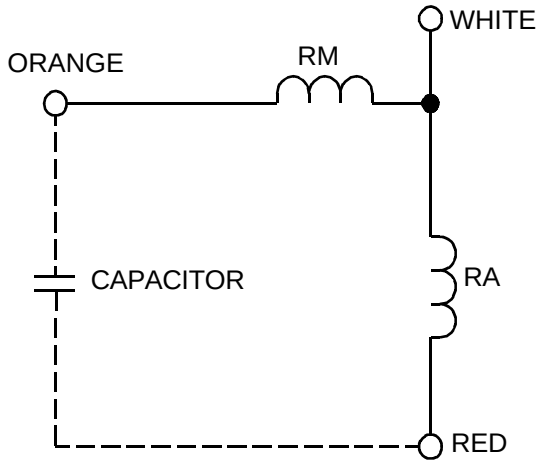
RESISTANCE VALUE(Ù)	20 (68)	RM=3.51 RA1=2.77
	75 (167)	RM=4.27 RA1=3.37

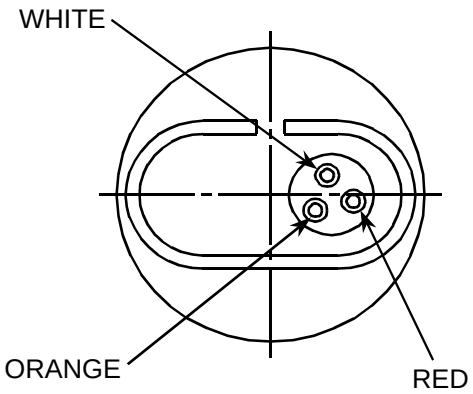

MODEL RAS-13GZ1 / RAM-30GW1
RAS-09GZ1 x 2

THERMOSTAT

Thermostat Specifications

MODEL			RAS-09GZ1	RAS-13GZ1
THERMOSTAT MODEL			IC	
TEMPERATURE ( )	INDICATION 16	ON	17.0 (62.6)	
		OFF	16.3 (61.3)	
	INDICATION 24	ON	25.0 (77.0)	
		OFF	24.3 (75.7)	
	INDICATION 32	ON	33.0 (91.4)	
		OFF	32.3 (90.4)	

FAN MOTOR

Fan Motor Specifications

MODEL		RAS-13GZ1	RAS-09GZ1 x 2	RAM-30GW1
PHASE		SINGLE		
RATED VOLTAGE		220 - 230V		
RATED FREQUENCY		50Hz		
OUT PUT		10W	8W	75W
POLE NUMBER		4	4	4
CONNECTION		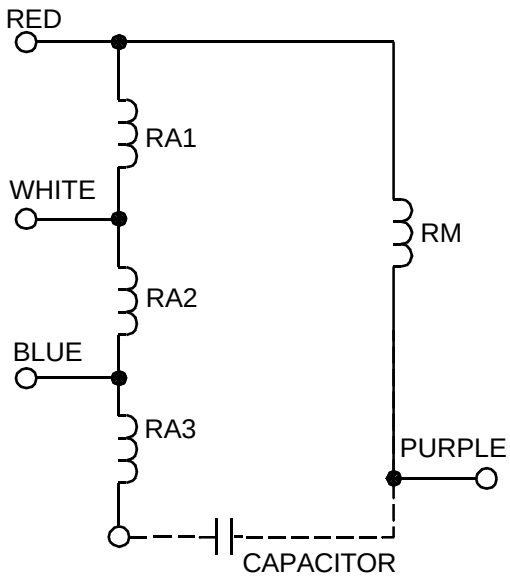		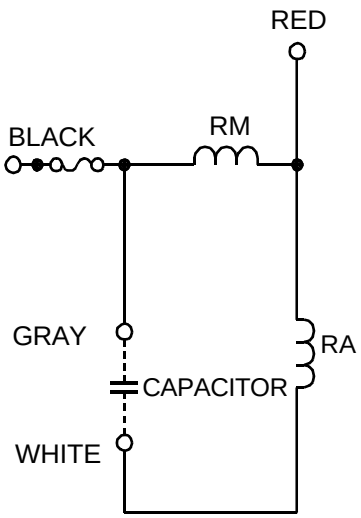
RESISTANCE VALUE (Ù)	20 (68)	RM=605 RA2=98 RA1=112 RA3=306	RM=605 RA2=57 RA1=77 RA3=249	RA=83.3 RM=53.1
	75 (167)	RM=735.5 RA2=119.1 RA1=136.2 RA3=372	RM=735.5 RA2=69.3 RA1=93.6 RA3=302.7	RA=101.3 RM=64.6

COMPRESSOR

Compressor Motor Specifications

MODEL		RAM-30GW1	
COMPRESSOR MODEL		4KS210DAA	4KS340DAA
PHASE		SINGLE	
RATED VOLTAGE		220 - 240V	
RATED FREQUENCY		50Hz	
LOCKED ROTOR CURRENT		26A	41A
POLE NUMBER		2	
CONNECTION		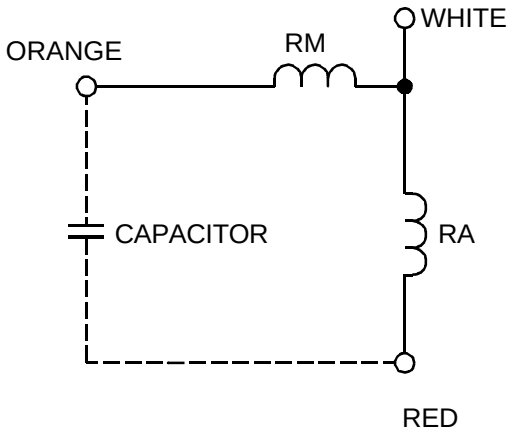	
RESISTANCE VALUE(Ù)	20 (68)	RM=2.159 RA1=3.527	RM=1.259 RA1=2.398
	75 (167)	RM=2.624 RA1=4.288	RM=1.531 RA1=2.915

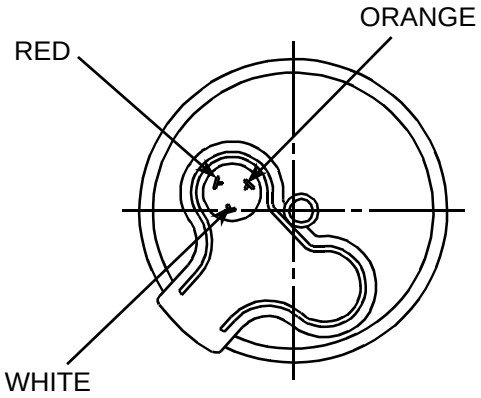

WIRING DIAGRAM

MODEL RAS-09GZ1×3 / RAM-20GW1

Ⓐ	COMPRESSOR	BLU	BLUE
Ⓑ	FAN MOTOR	YEL	YELLOW
Ⓒ	POWER SWICH	BRN	BROWN
Ⓕ	1µF CAPACITOR	WHT	WHITE
Ⓖ	40µF CAPACITOR	GRY	GRAY
Ⓗ	2.3µF CAPACITOR	ORN	ORANGE
Ⓘ	FAN MOTOR PROTECTOR	GRN	GREEN
Ⓙ	TERMINAL BOARD	RED	RED
Ⓚ	POWER CORD	BLK	BLACK
Ⓟ	POWER RELAY	PNK	PINK
Ⓡ	2.3µF CAPACITOR	PUR	PURPLE
Ⓢ	THERMISTOR		
Ⓣ	TRANSFORMER		
Ⓤp	OVERLOAD RELAY		
Ⓥ	VARISTOR		
Ⓦ	FAN RELAY		
Ⓧ	FUSE		
Ⓨ	SURGE ABSORBER		
Ⓩ	AUTO SWEEP MOTOR		
ⓓ	THERMOSTAT		
Ⓝ	2-WAY VALVE COIL		

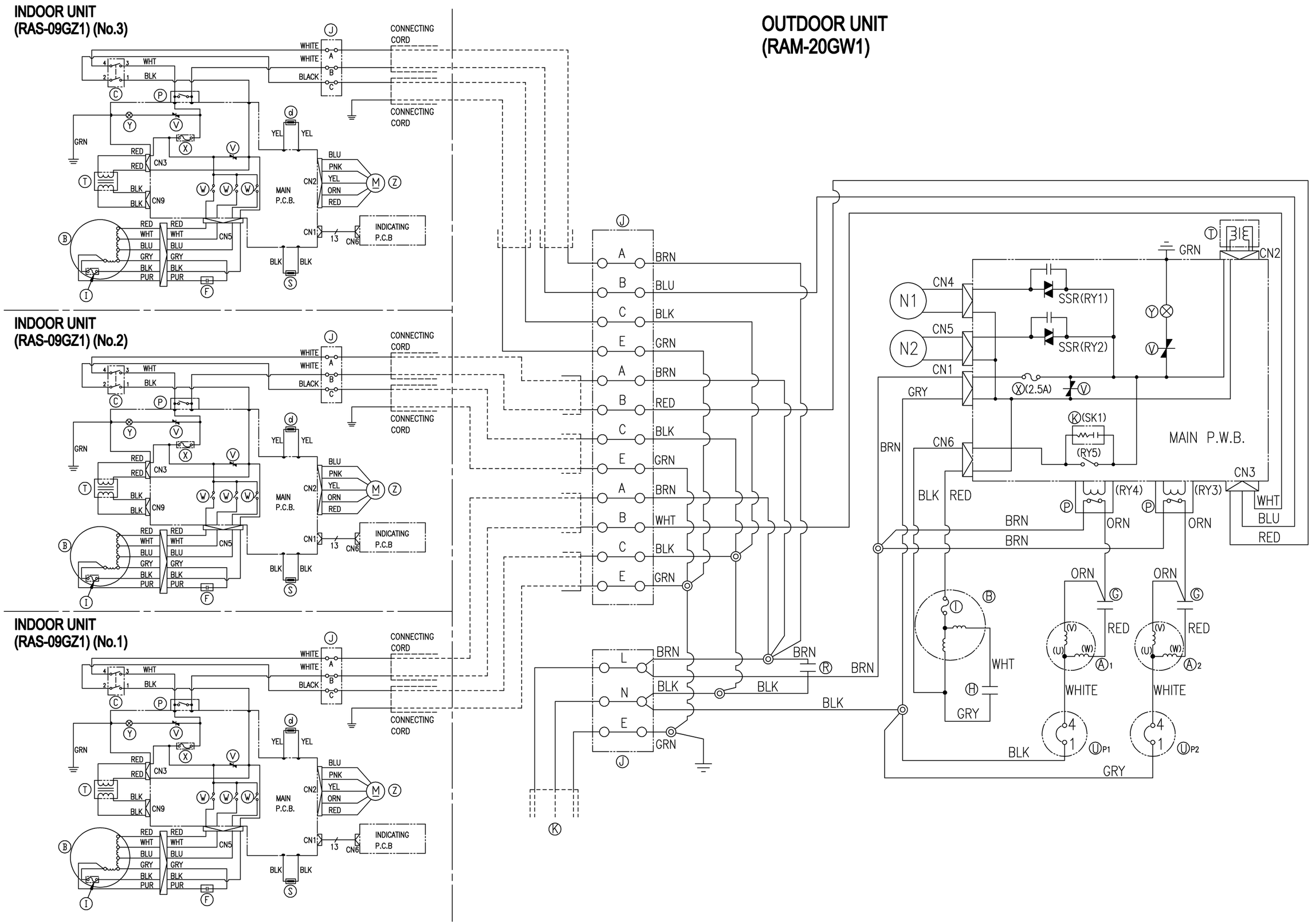
INDOOR UNIT
(RAS-09GZ1) (No.3)
INDOOR UNIT
(RAS-09GZ1) (No.2)
INDOOR UNIT
(RAS-09GZ1) (No.1)
OUTDOOR UNIT
(RAM-20GW1)
CONNECTING CORD
MAIN P.C.B.
INDICATING P.C.B
MAIN P.W.B.
SSR(RY1)
SSR(RY2)
(2.5A)
(SK1)
(RY5)
(RY4)
(RY3)
CN1
CN2
CN3
CN4
CN5
CN6
CN9
N1
N2
WHITE
BLACK
WHT
BLK
GRN
RED
BLU
PNK
YEL
ORN
GRY
PUR
BRN

WIRING DIAGRAM

MODEL RAS-13GZ1
RAS-09GZ1x 2 / RAM-30GW1

A_1	COMPRESSOR(4KS210DAA)
A_2	COMPRESSOR(4KS340DAA)
B	FAN MOTOR
C	POWER SWICH
F	1µF CAPACITOR
G_1	35µF CAPACITOR
G_2	60µF CAPACITOR
H	4µF CAPACITOR
I	FAN MOTOR PROTECTOR
J	TERMINAL BOARD
K	POWER CORD
P	POWER RELAY
R	2.3µF CAPACITOR
S	THERMISTOR
T	TRANSFORMER
V	VARISTOR
W	FAN RELAY
X	FUSE
Y	SURGE ABSORBER
Z	AUTO SWEEP MOTOR
d	THERMOSTAT
N	2-WAY VALVE COIL

BLU	BLUE
YEL	YELLOW
BRN	BROWN
WHT	WHITE
GRY	GRAY
ORN	ORANGE
GRN	GREEN
RED	RED
BLK	BLACK
PNK	PINK
PUR	PURPLE

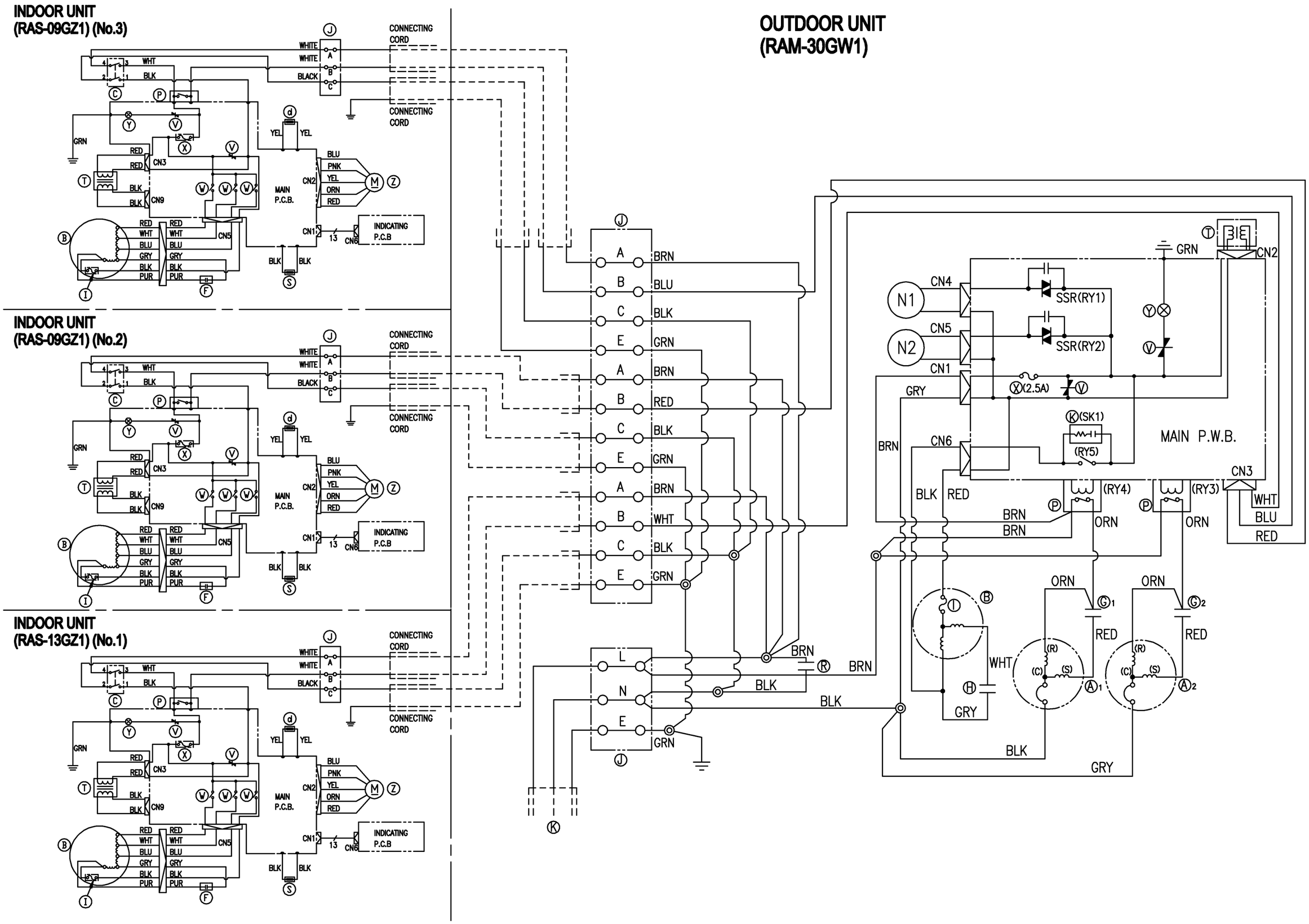
INDOOR UNIT
(RAS-09GZ1) (No.3)
INDOOR UNIT
(RAS-09GZ1) (No.2)
INDOOR UNIT
(RAS-13GZ1) (No.1)
OUTDOOR UNIT
(RAM-30GW1)
CONNECTING CORD
MAIN P.C.B.
INDICATING P.C.B
MAIN P.W.B.
SSR(RY1)
SSR(RY2)
(2.5A)
(SK1)
(RY5)
(RY4)
(RY3)
CN1
CN2
CN3
CN4
CN5
CN6
CN9
N1
N2
WHITE
BLACK
WHT
BLK
GRN
RED
YEL
BLU
PNK
ORN
GRY
PUR
BRN

WIRING DIAGRAW OF THE PRINTED WIRING BOARD
MODEL RAS-09GZ1, RAS-13GZ1

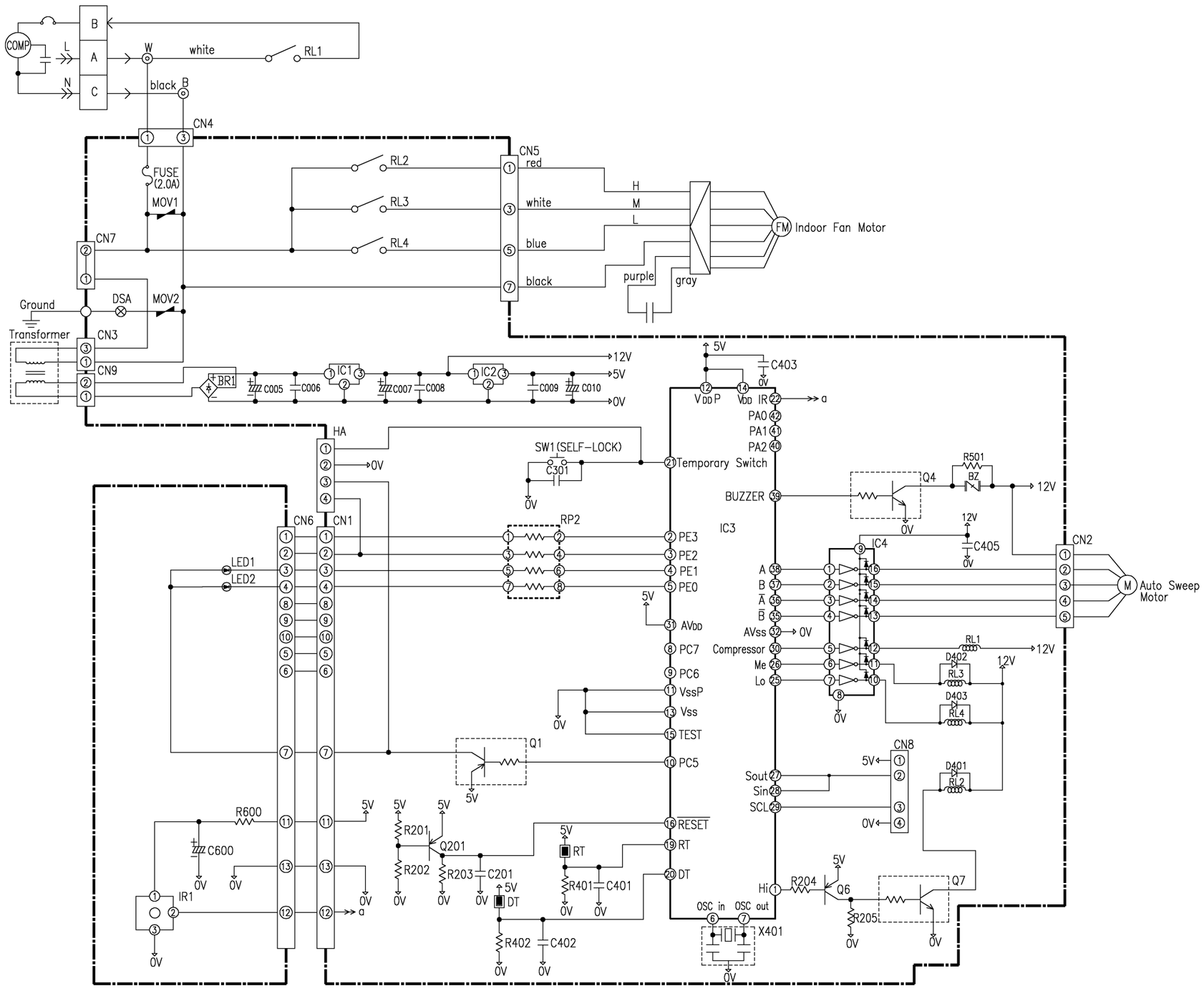

RESISTANCE(Ù)

SYMBOL	RATING	TYPE
RP2	220Ù-5%	H
R201	10KÙ-1%	R
R202	61.9KÙ-1%	R
R203	10KÙ-1%	R
R204	1.2K-5%	R
R205	10K-1%	R
R401	5.16KÙ-1%	R
R402	5.16KÙ-1%	R
R501	1.2KÙ-5%	R
R600	47Ù-5%	H

SYMBOL	MODEL	TYPE
FUSE	2.0A/250V	H
MOV1	OS470NR	H
MOV2	OS470NR	H
DSA	DSA-362MA	H
BR1	SIVB20	H
IC1	7812	H
IC2	7805	H
IC3	CPU	H
IC4	2003	H
Q201	2SA1015	R
Q1	DTA114TS(10KÙ)	R
Q6	2SA1015	R
Q4,Q7	DTC114TS(10KÙ)	R
RL2	ALD-112	H
RL3	ALD-112	H
RL4	ALD-112	H
X401	6M Hz	R
RT	5KÙ at 25	H
DT	5KÙ at 25	H

CAPACITOR(F)

SYMBOL	RATING	TYPE
C005	ELE 2200ì F	H
C006	0.01ì F	R
C007	ELE 1000ì F	H
C008	0.1ì F	R
C009	ELE 470ì F	H
C010	0.1ì F	R
C201	0.1ì F	R
C301	0.1ì F	R
C401	2200PF	R
C402	2200PF	R
C403	0.1ì F	R
C405	0.1ì F	R
C600	ELE 47ì F	H

DIODE

SYMBOL	MODEL
D401	1N4003
D402	1N4003
D403	1N4003

LED

SYMBOL	MODEL	COLOR
LED1	L-44GD-LA6SF2.5	GREEN
LED2	L-44YD-LA6SF2.5	YELLOW

H : INSERT OF HAND
R : RADIAL

MODEL RAM-20GW1
RAM-30GW1

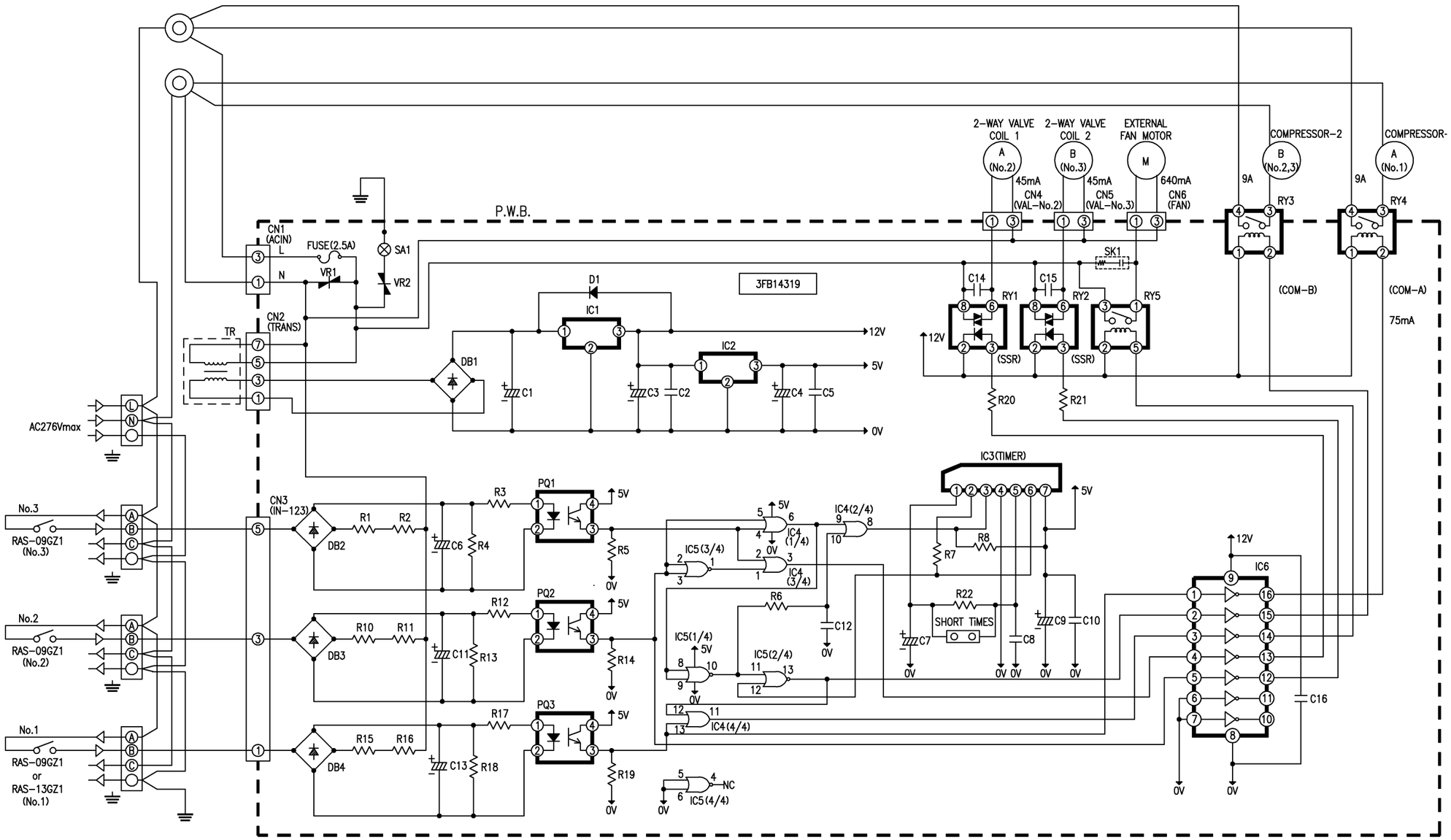

J----5%
RESISTANCE (Ù) F----1%

SYMBOL	RATING		
R1	24k	J	2W
R2	24k	J	2W
R3	560	J	1/4W
R4	100K	J	1/4W
R5	5.1k	F	1/4W
R6	33k	J	1/4W
R7	5.6k	J	1/4W
R8	5.6k	J	1/4W
R10	24k	J	2W
R11	24k	J	2W
R12	560	J	1/4W
R13	100k	J	1/4W
R14	5.1k	F	1/4W
R15	24k	J	2W
R16	24k	J	2W
R17	560	J	1/4W
R18	100k	J	1/4W
R19	5.1k	F	1/4W
R20	620	J	1/2W
R21	620	J	1/2W
R22	150k	F	1/4W

D---ELECTROLYTIC CAPACITOR
C---CERAMIC CAPACITOR
F---FILM CAPACITOR

CAPACITOR

SYMBOL	RATING		TYPE
C1	1000ì F	35V	D
C2	0.1ì F	25V	C
C3	100ì F	50V	D
C4	10ì F	16V	D
C5	0.1ì F	25V	C
C6	47ì F	16V	D
C7	10ì F	16V	D
C8	0.1ì F	50V	F
C9	10ì F	16V	D
C10	0.1ì F	25V	C
C11	47ì F	16V	D
C12	0.1ì F	50V	F
C13	47ì F	16V	D
C14	1000pF	AC250V	C
C15	1000pF	AC250V	C
C16	0.1ì F	25V	C

IC

SYMBOL	MODEL
IC1	7812
IC2	7805
IC3	AN6780
IC4	7432
IC5	7402
IC6	2003

DIODE

SYMBOL	MODEL
D1	IN4003

VARISTOR

SYMBOL	MODEL
VR1	470NR
VR2	470NR

DIODE BRIDGE

SYMBOL	MODEL
DB1	S1WB60
DB2	S1WB60
DB3	S1WB60
DB4	S1WB60

RELAY

SYMBOL	MODEL
RY1	S26MD02V
RY2	S26MD02V
RY3	JM1aN-TMP-DC12V
RY4	JM1aN-TMP-DC12V
RY5	JS1-12V

NOISE SUPPRESSOR

SYMBOL	MODEL
SK1	XE1201

SURGE ABSORBER

SYMBOL	MODEL
SA1	S-ABSO-362

PHOTO COUPLER

SYMBOL	MODEL
PQ1	PS-2501
PQ2	PS-2501
PQ3	PS-2501

CONNECTOR

SYMBOL	MODEL	COLOR
CN1	B2P3-VH	WHITE
CN2	B4P7-VH	WHITE
CN3	B3P5-VH	WHITE
CN4	B2P3-VH	BLUE
CN5	B2P3-VH	RED
CN6	B2P3-VH	BLACK

FUSE

SYMBOL	RATING
FUSE	2.5A/250V

BASIC MODE

MODEL RAS-09GZ1 / RAM-20GW1 , RAS-13GZ1 / RAM-30GW1 ,
RAS-09GZ1 x 2 RAS-09GZ1 x 2

	Control function \ Operation mode		Fan	Cooling	Sensor dehumidification	Automatic
1	Start/stop button, basic mode		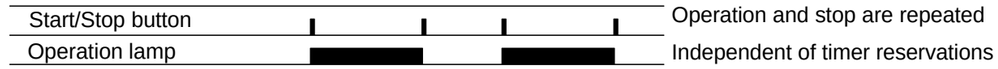			
2	Timer operation	OFF timer	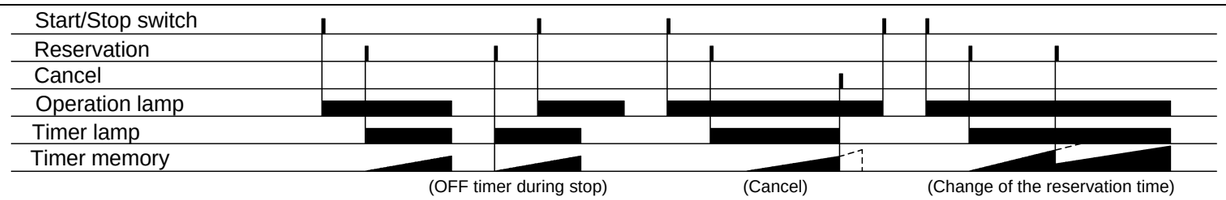			
		ON timer	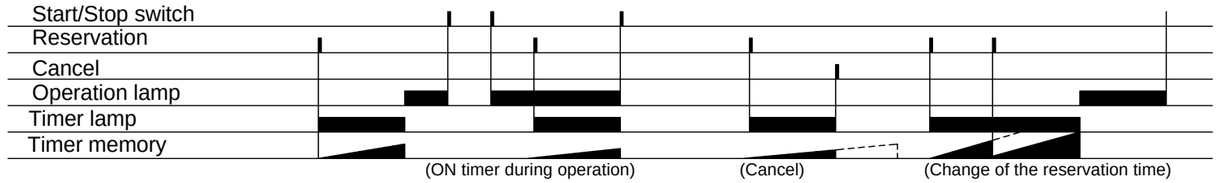			
3	Circulation mode	Automatic		"HI", "MED" ,or "LO" operation is executed according to the thermostat signal.(Refer to "Thermostat operation".)	"LO" and "Stop" are repeated according to the thermostat signal, independent of the setting.	"HI", "MED" ,or "LO" operation is executed according to the thermostat signal.(Refer to "Thermostat operation".)
		HI	Operation in "HI" mode	Same as on the left.		Same as on the left.
		MED	Operation in "MED" mode	Same as on the left.		Same as on the left.
		LO	Operation in "LO" mode	Same as on the left.		Same as on the left.
4	Thermostat operation H HI L MED S LO		Independent of the thermostat signal.	In case of "Automation" mode. 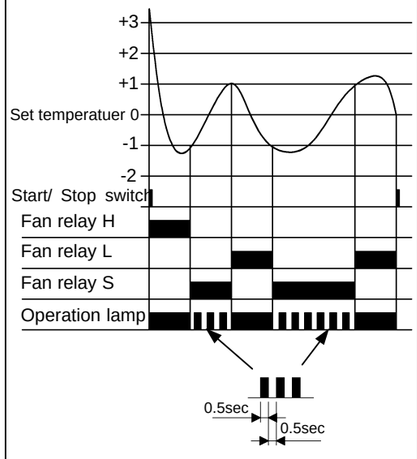	When the room temperature < 21 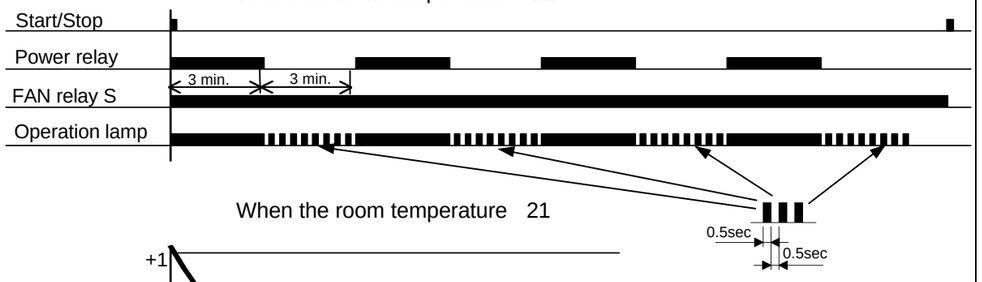 When the room temperature 21 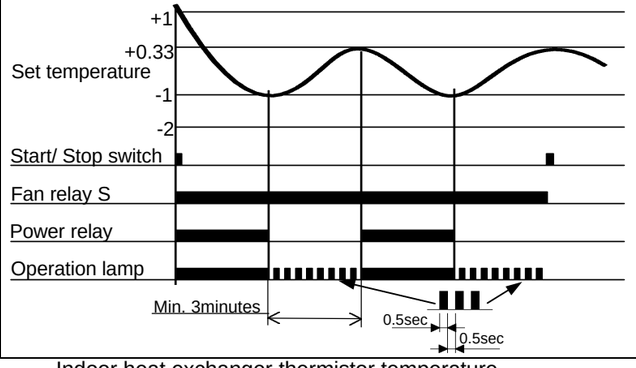 Notes: Room temperature : RT Set temperature : ST from Remote Controller If RT ST+1 Then set temperature = ST If RT < ST+1 Then set temperature = RT-2	The operation mode at the start of operation differs as shown below according to the room temperature. Room temperature at the start of operation 25°C: cooling — The set temperature shall be 25 16°C: Sensor dehumidi-fication — The set temperature shall be 23 The operation details are the same as for each operation mode.
5	Defrosting (including automation fresh defrosting).		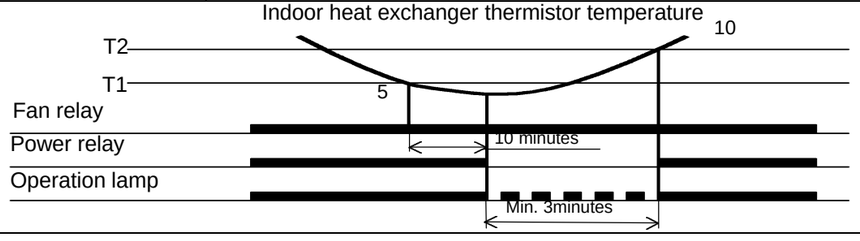			defrosting of each operation mode is executed.

Multi piping condition when connecting 3 indoor units (3 rooms) with 2 compressors.

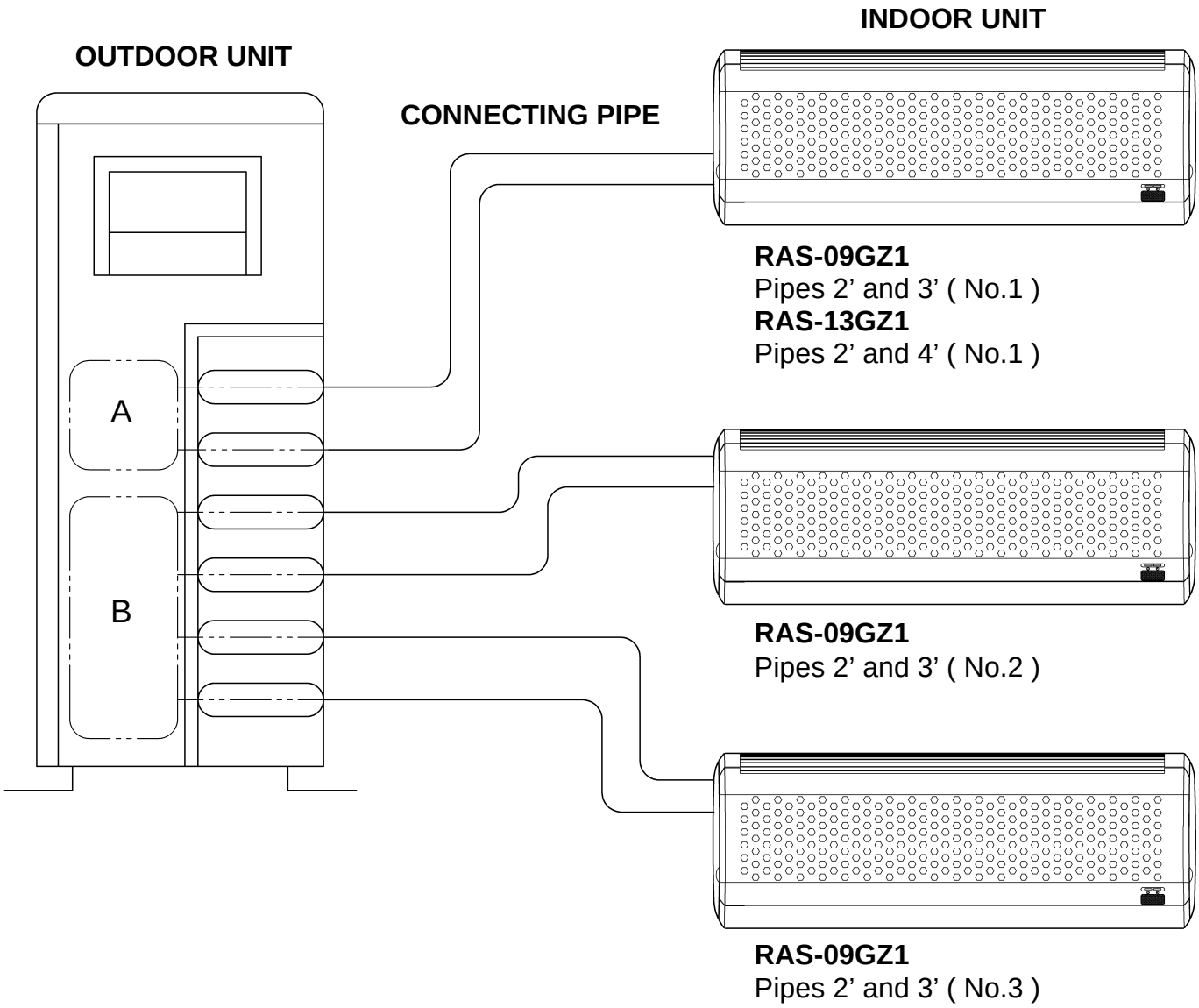

RAM-20GW1

Compressor A : Operates 1 indoor unit with 1 compressor (Pipes 2' and 3')

Compressor B : Operates 2 indoor unit with 1 compressor (Pipes 2' and 3')

RAM-30GW1

Compressor A : Operates 1 indoor unit with 1 compressor (Pipes 2' and 4')

Compressor B : Operates 2 indoor unit with 1 compressor (Pipes 2' and 3')

Combination operation Operation mode : Cooling

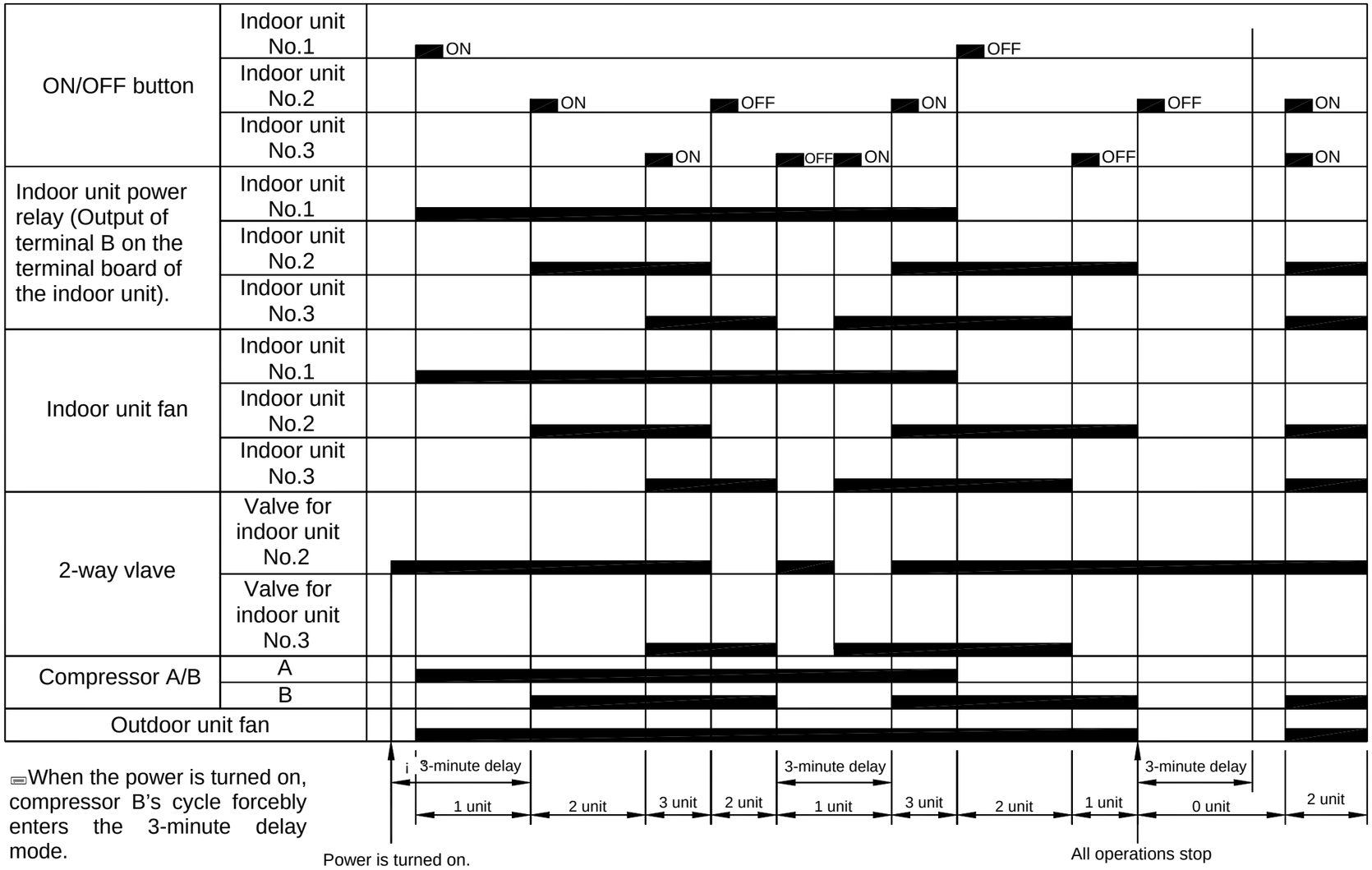

When the power is turned on, compressor B's cycle forcebly enters the 3-minute delay mode.

Note:

1. When the power is turned on, compressor B's cycle forcibly enters the 3-minute delay mode to perform initial setting for 2-way valve control.
2. Only compressor B's cycle is subject to the 3-minute delay. The 2-way valve for indoor unit No.2 is always opened during the 3-minute delay mode after compressor B has stopped. If the indoor unit is turned on during the 3-minute delay mode. the 2-way valve performs valve control to open the valve for indoor unit No.3 and close the valve for indoor unit No.2.
3. During the 3-minute delay mode after compressor B has stopped, even if indoor units No.2 and No.3, compressor B does not operate. The indoor units enter the ventilation (fan operation) mode.
4. Compressor A: Operates 1 indoor unit with 1 compressor (Pipes 2' and 3' for RAM-20GW1 ,Pipes 2' and 4' for RAM-30GW1)
   Compressor B: Operates 2 indoor unit with 1 compressor (Pipes 2'and 3')

Conbination operation table (Cooling)

Indoor unit No.1	Indoor unit No.2	Indoor unit No.3	Compressor A	Compressor B	Valve No.2	Valve No.3	Outdoor unit fan
OFF	OFF	OFF	OFF	OFF	ON	OFF	OFF
OFF	OFF	ON	OFF	ON	OFF	ON	ON
OFF	ON	OFF	OFF	ON	ON	OFF	ON
OFF	ON	ON	OFF	ON	ON	ON	ON
ON	OFF	OFF	ON	OFF	ON	OFF	ON
ON	OFF	ON	ON	ON	OFF	ON	ON
ON	ON	OFF	ON	ON	ON	OFF	ON
ON	ON	ON	ON	ON	ON	ON	ON

Open/close control of 2-way valve

Indoor unit No.2	Indoor unit No.3	Valve No.2	Valve No.3
OFF	OFF	ON	OFF
ON	OFF	ON	OFF
OFF	ON	OFF	ON
ON	ON	ON	ON

- As shown on the left, when both indoor units No.2 and No.3 are OFF, Valve No.2 is left open.
- When either of indoor unit No.2 or No.3 is ON, the valves corresponding to the indoor unit is opened.
- When both indoor units No.2 and No.3 are ON, both No.2 and No.3 valves are opened.

AUTO SWING FUNCTION

INPUT SIGNAL	PRESENT CONDITION			OPERATING SPECIFICATION	REFERNCE
	OPERATION	OPERATION MODE	AIR DEFLECTOR		
KEY INPUT	STOP	EACH MODE	STOP	ONE SWING (CLOSING AIR DEFLECTOR) DOWNWARD UPWARD	INTIALIZE AT NEXT OPERATION.
			DURING ONE SWING	STOP AT THE MOMENT.	
	DURING OPERATION	AUTO COOL COOL FAN AUTO DRY DRY	STOP	START SWINGING DOWNWARD UPWARD DOWNWARD	
			DURING SWING	STOP AT THE MOMENT.	
		CIRCULATOR	STOP	START SWINGING DOWNWARD UPWARD DOWNWARD	
			DURING SWING	STOP AT THE MOMENT.	
THERMO. ON (INTERNAL FAN ON)	DURING OPERATION	AUTO DRY DRY CIRCULATOR	TEMPORARY STOP	START SWING AGAIN.	
THERMO. OFF (INTERNAL FAN OFF)			DURING SWINGING	STOP SWINGING TEMPORAILY (SWING MODE IS CLEARED IF SWING COMMAND IS TRANSMITTED DURING TEMPORARY STOP.)	
MAIN SWITCH ON	STOP	COOL FAN DRY	STOP DURING ONE SWING	INITIALIZE DOWNWARD UPWARD	
		CIRCULATOR	STOP DURING ONE SWING	INITIALIZE DOWNWARD	
MAIN SWITCH OFF	DURING OPERATION	EACH MODE	STOP DURING SWING	ONE SWING (CLOSING AIR DEFLECTOR) DOWNWARD UPWARD	INITIALIZE AT NEXT OPERATION.
			DURING INITIALIZING		
CHANGE OF OPERATION	DURING OPERATION	EACH MODE	STOP	INITIALIZING CONDITION OF EACH MODE.	
			DURING SWING	STOP SWINGING AND MODE BECOMES INITIALIZING CONDITION.	

DESCRIPTION OF MAIN CIRCUIT OPERATION

1. ON/OFF

The Start/Stop and Timer reserve button independently. Their operations are shown in Fig. 1.

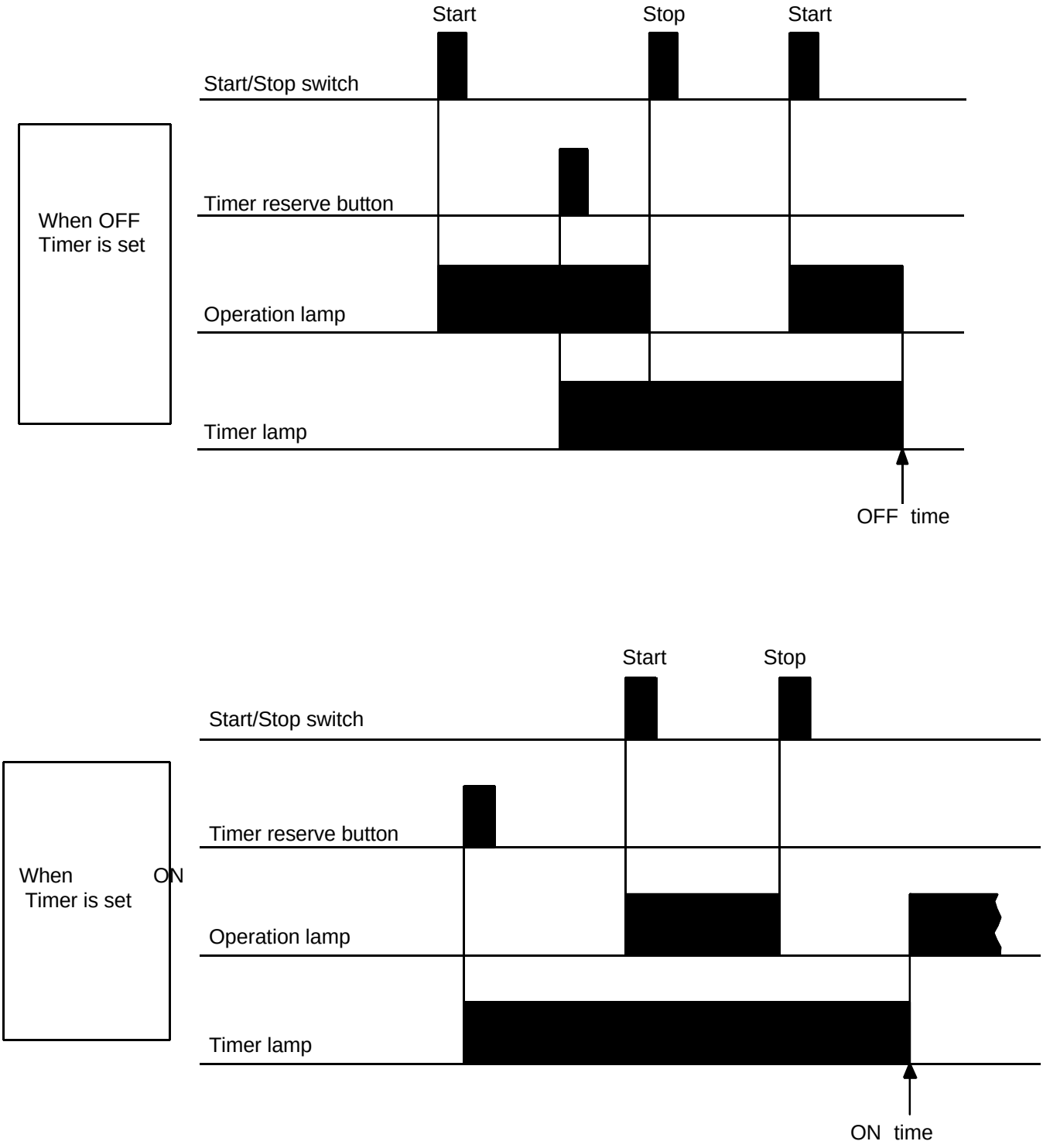

Fig. 1 Timer operation

2.Reset circuit

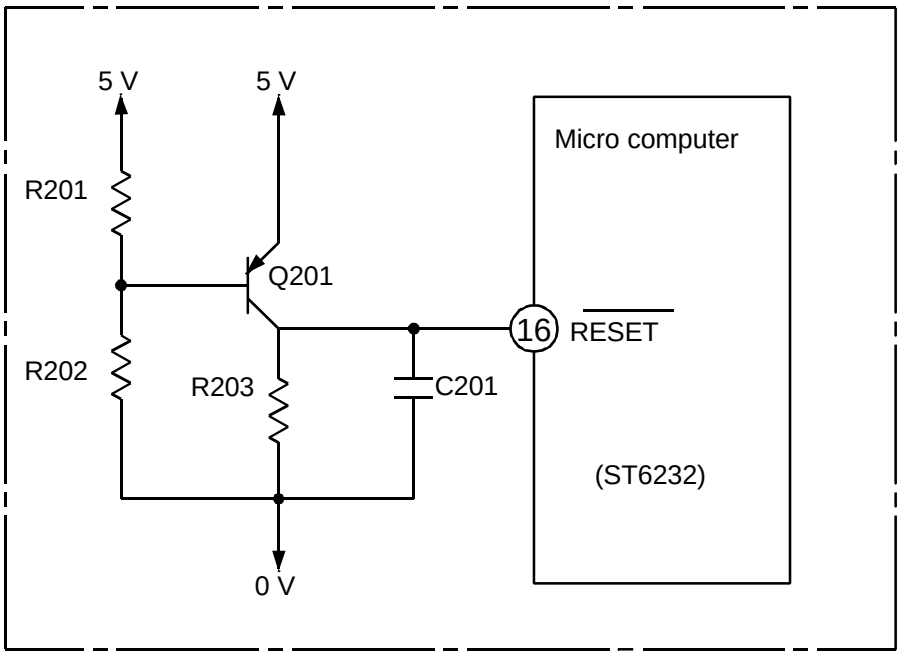

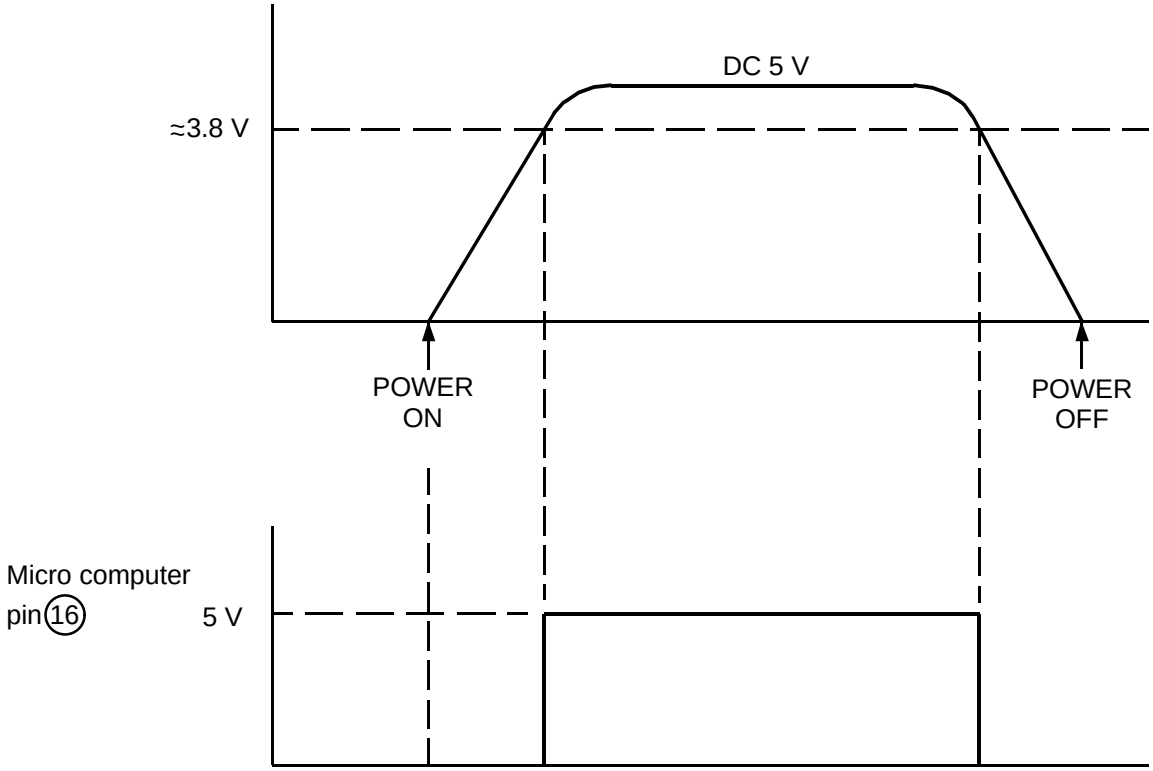

- The reset circuit is used to reset the program to its initial settings when the power is turned on or when the power is recovered after a power failure.
- The micro computer is reset when the reset input is “Lo”, and operation is possible when the reset input is “Hi”.
- The waveforms at each point when the power is turned on and off are shown in the diagrams.

3. Buzzer circuit

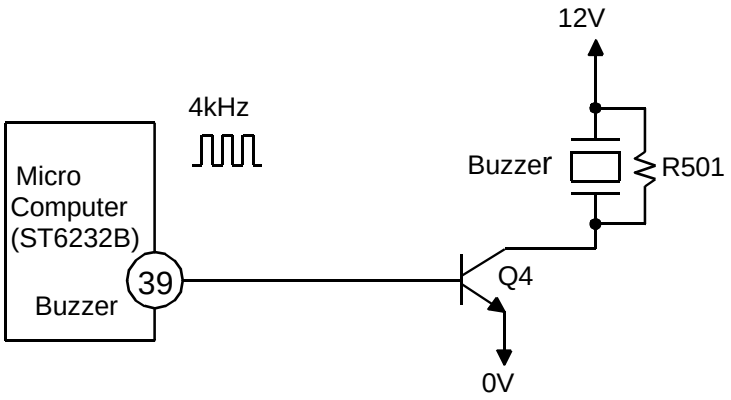

When the buzzer is to be activated, buzzer output pin 39 of the micro computer alternates between ON and OFF repeatedly at 4kHz. A 4kHz voltage is applied to the buzzer and the diaphragm of the buzzer vibrates to output 4kHz sound.

4.Receive circuit

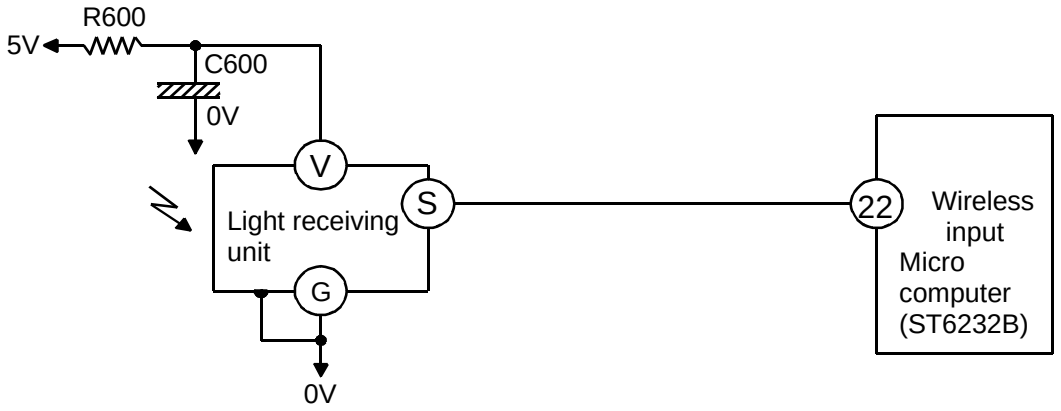

Infrared signals from the wireless remote controller are received by the light receiving unit and output after being amplified and shaped.

5. Temporary Switch Circuit with Auto Restart function.

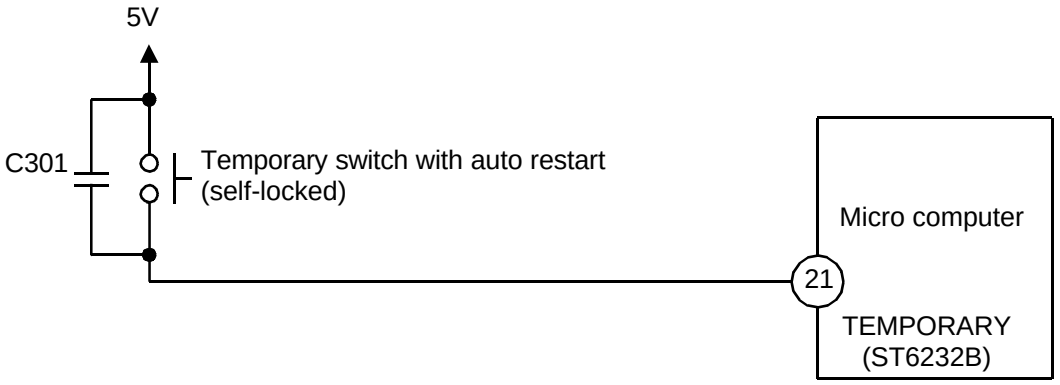

The temporary switch with Auto Restart function is used when the wireless remote controller is lost or troubled, or when power is supplied again after power stoppage.

[Self-diagnosis from indoor indicator lamp]

Check the position of the problem judging from the number of blinks of indoor indicator lamp.

Blinking state of the timer lamp	Details of operation	Parts to be checked
Blinks 14times 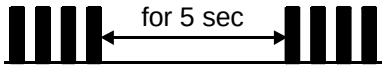 	When the indoor unit heat exchanger thermistor is short-circuited or desconnected, all operations will stop. (Reset to recover.)	(1) Check the heat exchanger thermistor.
Blinks 4 times 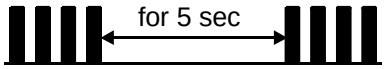 	When the room temperature thermistor is short-circuited or desconnected, alloperations will stop.(Reset to recover.)	(1) Check the room temperature thermistor.

Note:

When the timer lamp is blinking, operation using the remote controller cannot be done. To check the operation again, turn the power switch off, then turn it on again.

SERVICE CALL Q&A

Cooling operation

Q1 While cooling, the compressor sometimes stops abruptly.

A1 Check whether frost sticks on the heat exchanger of indoor unit or not. Wait for 3-4 minutes until the frost melts.

If cooling is performed when The room temperature is low, frost may stick on the heat exchanger of indoor unit.

Dehumidifying operation

Q2 The fan speed does not change during a dehumidifying operation.

A2 The fan speed is always LO at a dehumidifying operation.

Q3 Cold air comes out during a dehumidifying operation.

A3 To improve the dehumidification efficiency, LO fan speed operation is performed. Therefore the air is cold. This is not a trouble.

Q4 The operation does not stop even by raising the room temperature setting of remote control at a dehumidifying operation.

A4 At a dehumidifying operation, the actual room temperature is compared with the room temperature setting when starting the operation and the operation is as follows.

1) When actual room temperature ≥ room temperature setting +1 . The operation is according to the room temperature setting on the remote controller.
2) When actual room temperature < room temperature setting +1 . Regardless of the room temperature setting, the temperature is automatically set = room temp. -2 .
   In this case, the status is as 2) and therefore, the operation by the room temperature control is impossible. Turn off the ON/OFF switch, set the room temperature to a new value and turn on the operation by the ON/OFF switch.

Q5 In the dehumidifying mode, the temperature set by remote controller is set slightly higher than the room temperature but the operation starts.

A5 This is the status in 2) of (A4). The temperature is set a little lower than the room temperature to carry out a dehumidifying operation as far as possible.

Automatic operation

Q6 How is the automatic operation mode determined?

A6 According to the room temperature, cooling or dehumidifying operation is automatically selected.
Cooling:
When room temperature is approx. 25 or higher
Dehumidify:
When room temperature is between approx. 16 and 25

Q7 At an automatic operation, changing the fan speed change switch does not vary the fan speed.

A7 The fan speed is automatically determined.

Q8 The setting temperature cannot be controlled at an automatic operation.

A8 It is automatically set as follows.

At cooling :Set at 25
At dehumidifying:
If RT≧24
then ST 23
else ST RT-2

RT: Room temperature
ST: Setting temperature

When changing the room temperature setting in an automatic operation, the next automatic operation mode is determined by new room temperature setting.
If, for example,

Cooling : When room Temperature is Lower Then 22

Dehumidifying:
When room temperature is higher then 26

Common, etc.

Q9 There is a difference between the room temperature setting and actual room temperature.

A9 There may be a difference between the room temperature setting and actual room temperature on account of the room structure, air flow, etc.
If there is a difference from the room temperature, adjust the set temperature to keep living space at a comfortable

Q10 What will happen if the time setting is changed while in a timer operation?

A10 A timer operation is performed until the time after changing the time setting.

Q11 In the “Automatic fan speed” mode, the indoor fan changes to MED and LO fan speed.

A11 It is not a trouble. The cold wind preventive function operates.

The room temperature sensing thermistor in the indoor unit detects the room temperature and, according to the particular temperature, automatically performs “Cooling”, or Dehumidifying” operation.
The value indicated not at an “Automatic” but manual operation is not the actual room temperature but the room temperature setting.

setting is not displayed.

Wireless remote controller

Q12

3) Pressing the room temperature control button d ops transmit mark “ “ and sounds a receive sound but does no display the room temperature setting.

displayed.
The room temperature is automatically set as follows.
At cooling
Set at 25
At dehumidifying
Set to a temperature slightly lower than the room temperature.
3) At an “Automatic” operation, the room temperature setting is not displayed.

Q13 When the room temperature setting is “16”, pressing the room temperature control button “V“ causes no transmission. At “32”, pressing “Ë“ causes no transmission either.

A13 The room temperature is settable within the range of 16-32 and not beyond.

Q14 After selecting a “dehumidifying” operation mode, the fan speed mode remais “LO fan speed”.

A14 At a “dehumidifying” operaion, the “LO fan speed” is forcibly selected.

No cooling

NO

YES

Set the remote controller to an operation status and press the START/STOP button.

Check the following parts and replace if faulty.	
1) Current fuse	Remove and check the continuity across.
2) Varistor	Check whether the appearance is blackish or not. The resistance must be infinite. *1
3) Transformer	Thereafter, check the secondary voltage (approx. 13V AC)
4) Power Switch	Check the continuity between contacts.
5) Fan motor protector	Continuity across ❼ If there is no Continuity, also check the fan motor and Capacitor.

*1 Before checking the varistor, detach a terminal.

Is the level Hi (approx. 5V) between Micro computer pin (30) (Power relay) and 0V?

YES

Power relay abnormal

Compressor does not turn at Hi.

Replace Power relay

NO

Is the level Hi (approx. 5V) between Micro computer pin (26) (Fan relay-M) and 0V at “MED” fan speed?

YES

Fan relay-M abnormal

No “MED fan speed” operation at Hi.

NO

Check the circuit board inside parts. When checking, carry out a self diagnosis by indoor indicator lamp.

Replace faulty part

[Self-diagnosis check method with the unit indication lamp]

Trouble mode	Indication lamp	Operation contents	Inspection parts
Defective operation of the room temperature thermistor or defroster.	Timer lamp flashing.	Full stop occurs with a short-circuit or a wire break of the room temperature thermistor or defroster. (Reset for recovery)	Inspect the room temperature thermistor or defroster.

PARTS LIST AND DIAGRAM

MODEL RAS-09GZ1
RAS-13GZ1

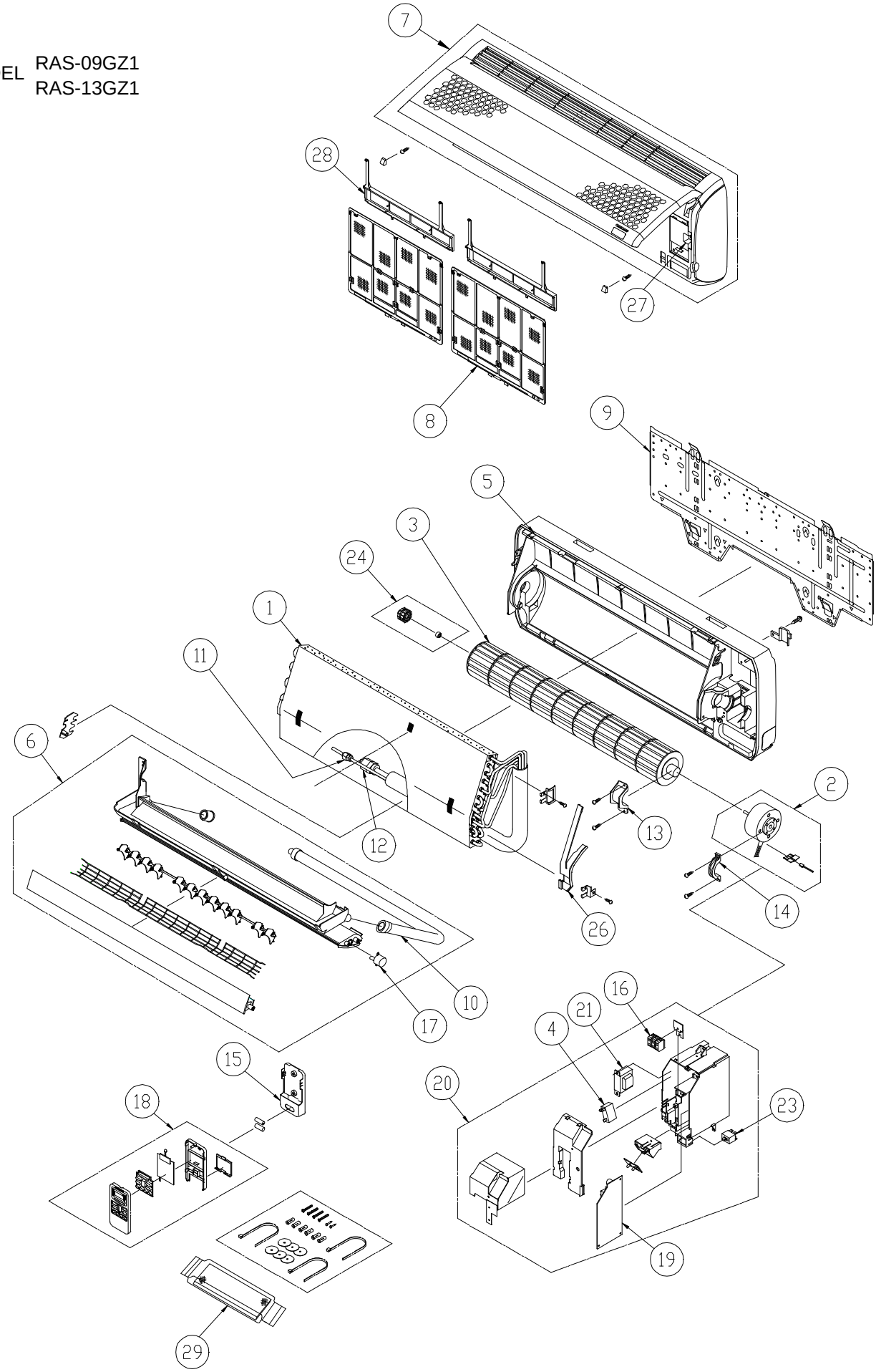

MODEL RAS-09GZ1

NO.	PARTS NO. RAS-09GZ1	Q'TY/UNIT	PARTS NAME	REMARK
1	RAS-09GZ1 601	1	EVAPORATOR	
2	RAS-09GZ1 602	1	FAN MOTOR (8W)	
3	RAS-09GZ1 603	1	TANGENFIAL FLOW FAN	
4	RAS-09GZ1 604	1	CAPACITOR(1↗F,450V)	
5	RAS-09GZ1 605	1	CABINET	
6	RAS-09GZ1 606	1	DRAIN PAN ASSEMBLY	
7	RAS-09GZ1 607	1	FRONT COVER ASSEMBLY	
8	RAS-09GZ1 608	2	FILTER	
9	RAS-09GZ1 609	1	MOUNTING PLATE	
10	RAS-09GZ1 610	1	DRAIN HOSE	
11	RAS-09GZ1 611	1	UNION(2)	
12	RAS-09GZ1 612	1	UNION(3)	
13	RAS-09GZ1 613	1	FAN MOTOR SUPPORT(L)	
14	RAS-09GZ1 614	1	FAN MOTOR SUPPORT(R)	
15	RAS-09GZ1 615	1	REMOTE CONTROLLOR SUPPORT	
16	RAS-09GZ1 616	1	TERMINAL BOARD(3P)	
17	RAS-09GZ1 617	1	STEPPING MOTOR	
18	RAS-09GZ1 618	1	REMOTE CONTROLLOR	
19	RAS-09GZ1 619	1	P.C.B.(MAIN)	
20	RAS-09GZ1 620	1	CONTROL BODY(MIQ-RES07NB1)	
21	RAS-09GZ1 621	1	TRANSFORMER	
23	RAS-09GZ1 623	1	POWER SWITCH	
24	RAS-09GZ1 624	1	BEARING ASSEMBLY	
26	RAS-09GZ1 626	1	PIPE COVER	
27	RAS-09GZ1 627	1	COVER	
28	RAS-09GZ1 628	2	FILTER HOLDER	
29	RAS-09GZ1 629	1	AIR CLEANING FILTER	

NO.	PARTS NO. RAS-09GZ1	Q'TY/UNIT	PARTS NAME	REMARK
31	RAS-09GZ1 631	1	P.C.B (LED)	
32	RAS-09GZ1 632	1	TRANSFORMER	
33	RAM-20CW1 616	1	RELAY (JM1a-TMP-DC12V)	
34	RAS-09GZ1 633	1	THERMISTOR (ROOM TEMP.)	
35	RAS-09GZ1 634	1	FUSE (2A)	
36	RAM-20CW1 612	2	FUSE HOLDER	
37	RAS-09GZ1 635	1	OSCILLATOR (CST6.00MGW)	
38	RAM-20CW1 613	2	VARISTOR (470NR)	
39	RAS-09GZ1 636	2	TRANSISTOR (2SA1015)	
40	RAS-09GZ1 637	1	TRANSISTOR (DTA114TS)	
41	RAS-09GZ1 638	2	TRANSISTOR (DTC114TS)	
42	RAS-09GZ1 639	1	MICRO COMPUTER (ST6232B)	
43	RAM-20CW1 626	1	SURGE ABSORBER(DSA-362MA)	
44	RAM-20CW1 624	3	DIODE (IN4003)	
45	RAS-09GZ1 640	1	DIODE BRIDGE (SIVB20)	
46	RAS-09GZ1 641	1	LED (YELLOW)(L-44YD-LASF2.5)	
47	RAS-09GZ1 642	1	LED (GREEN)(L-44GD-LASF2.5)	
48	RW-123BHS 203	1	POST (VH-PV-2PB)	
49	RAS-09GZ1 643	1	CAPACITOR(0.01↗F, 50V)	
50	RAS-09GZ1 644	1	REGULATOR IC (78M05)	
51	RAM-20CW1 618	1	REGULATOR IC (↗PC7812AHF)	
52	RAS-09GZ1 645	1	LED COVER	
53	RAS-09GZ1 646	1	LIGHT RECEIVING UNIT	
54	RAS-09GZ1 647	1	FAN MOTOR PROTECTOR (115)	
55	RAS-09GZ1 648	1	THERMISTOR (HEAT EXCHANGER)	
56	RAS-5101C 916	1	DRIVER-IC (ULN2003AN)	

MODEL RAS-13GZ1

NO.	PARTS NO. RAS-13GZ1	Q'TY/UNIT	PARTS NAME	REMARK
1	RAS-13GZ1 601	1	EVAPORATOR	
2	RAS-13GZ1 602	1	FAN MOTOR (10W)	
3	RAS-09GZ1 603	1	TANGENFIAL FLOW FAN	
4	RAS-09GZ1 604	1	CAPACITOR (1↗F,450V)	
5	RAS-09GZ1 605	1	CABINET	
6	RAS-09GZ1 606	1	DRAIN PAN ASSEMBLY	
7	RAS-09GZ1 607	1	FRONT COVER ASSEMBLY	
8	RAS-09GZ1 608	2	FILTER	
9	RAS-09GZ1 609	1	MOUNTING PLATE	
10	RAS-09GZ1 610	1	DRAIN HOSE	
11	RAS-09GZ1 611	1	UNION(2)	
12	RAS-13GZ1 603	1	UNION(4)	
13	RAS-09GZ1 613	1	FAN MOTOR SUPPORT(L)	
14	RAS-09GZ1 614	1	FAN MOTOR SUPPORT(R)	
15	RAS-09GZ1 615	1	REMOTE CONTROLLOR SUPPORT	
16	RAS-09GZ1 616	1	TERMINAL BOARD(3P)	
17	RAS-09GZ1 617	1	STEPPING MOTOR	
18	RAS-09GZ1 618	1	REMOTE CONTROLLOR	
19	RAS-09GZ1 619	1	P.C.B.(MAIN)	
20	RAS-09GZ1 620	1	CONTROL BODY (MIQ-RES07NB1)	
21	RAS-09GZ1 621	1	TRANSFORMER	
23	RAS-09GZ1 623	1	POWER SWITCH	
24	RAS-09GZ1 624	1	BEARING ASSEMBLY	
26	RAS-09GZ1 626	1	PIPE COVER	
27	RAS-09GZ1 627	1	COVER	
28	RAS-09GZ1 628	2	FILTER HOLDER	
29	RAS-09GZ1 629	1	AIR CLEANING FILTER	

NO.	PARTS NO. RAS-13GZ1	Q'TY/UNIT	PARTS NAME	REMARK
31	RAS-09GZ1 631	1	P.C.B (LED)	
32	RAS-09GZ1 632	1	TRANSFORMER	
33	RAM-20CW1 616	1	RELAY (JM1a-TMP-DC12V)	
34	RAS-09GZ1 633	1	THERMISTOR (ROOM TEMP.)	
35	RAS-09GZ1 634	1	FUSE (2A)	
36	RAM-20CW1 612	2	FUSE HOLDER	
37	RAS-09GZ1 635	1	OSCILLATOR (CST6.00MGW)	
38	RAM-20CW1 613	2	VARISTOR (470NR)	
39	RAS-09GZ1 636	2	TRANSISTOR (2SA1015)	
40	RAS-09GZ1 637	1	TRANSISTOR (DTA114TS)	
41	RAS-09GZ1 638	2	TRANSISTOR (DTC114TS)	
42	RAS-09GZ1 639	1	MICRO COMPUTER (ST6232B)	
43	RAM-20CW1 626	1	SURGE ABSORBER(DSA-362MA)	
44	RAM-20CW1 624	3	DIODE (IN4003)	
45	RAS-09GZ1 640	1	DIODE BRIDGE (SIVB20)	
46	RAS-09GZ1 641	1	LED (YELLOW)(L-44YD-LASF2.5)	
47	RAS-09GZ1 642	1	LED (GREEN)(L-44GD-LASF2.5)	
48	RW-123BHS 203	1	POST (VH-PV-2PB)	
49	RAS-09GZ1 643	1	CAPACITOR(0.01↗F, 50V)	
50	RAS-09GZ1 644	1	REGULATOR IC (78M05)	
51	RAM-20CW1 618	1	REGULATOR IC (↗PC7812AHF)	
52	RAS-09GZ1 645	1	LED COVER	
53	RAS-09GZ1 646	1	LIGHT RECEIVING UNIT	
54	RAS-09GZ1 647	1	FAN MOTOR PROTECTOR (115)	
55	RAS-09GZ1 648	1	THERMISTOR (HEAT EXCHANGER)	
56	RAS-5101C 916	1	DRIVER-IC (ULN2003AN)	

MODEL RAM-20GW1

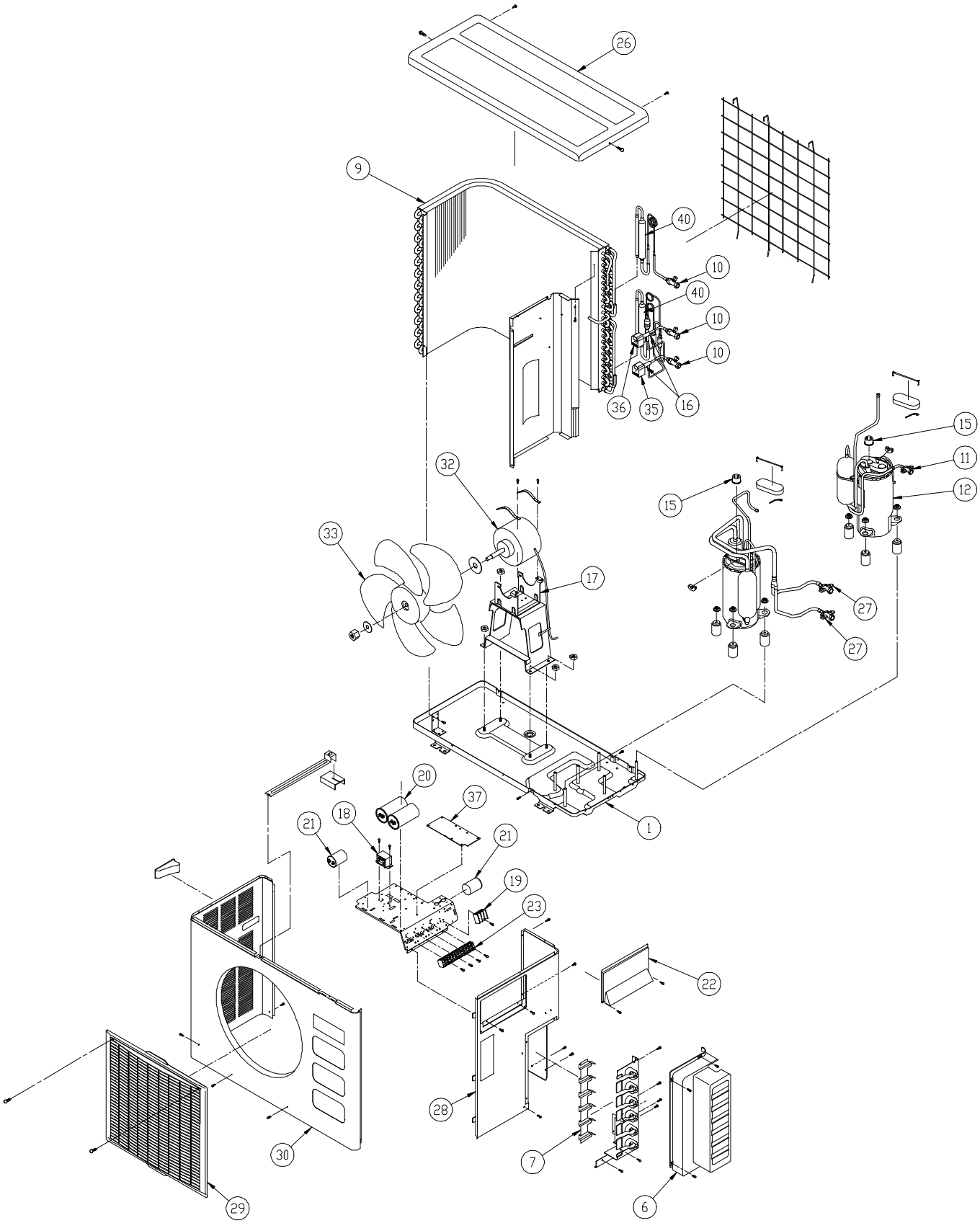

MODEL RAM-20GW1

NO.	PARTS NO. RAS-20GW1	Q'TY/UNIT	PARTS NAME	REMARK
1	RAM-18GZ1 601	1	BASE	
6	RAM-20CW1 601	1	VALVE COVER	
7	RAM-20CW1 602	1	RUBBER	
9	RAM-20GW1 602	1	CONDENSER	
10	RAM-20GW1 603	3	2-WAY VALVE (1/4")	
11	RAM-18GZ1 606	1	3-WAY VALVE (3/8")	
12	RAM-18GZ1 607	2	COMPRESSOR (GK516S1Z)	
15	RAM-18GZ1 620	2	OVERLOAD RELAY (8.0S66C30A)	
16	RAM-20CW1 605	2	2-WAY VALVE	
17	RAM-18CZ1 619	1	MOTOR BASE	
18	RAM-20CW1 606	1	TRANSFORMER	
19	RAM-18CHZ1 605	1	TERMINAL BOARD (3P)	
20	RAM-18GZ1 610	2	CAPACITOR (40↗F, 400V)	
21	RAM-18CZ1 611	2	CAPACITOR (2.3↗F, 450V)	
22	RAM-18GZ1 623	1	ELECTRICAL COVER	
23	RAM-30CW1 613	4	TERMINAL BOARD (3P)	
26	RAM-18GZ1 613	1	TOP COVER	
27	RAM-20GW1 604	2	3-WAY VALVE (3/8")	
28	RAM-20GW1 607	1	SIDE COVER	
29	RAM-18GZ1 615	1	SPIDER	
30	RAM-18GZ1 616	1	CABINET	
32	RAM-20GW1 608	1	FAN MOTOR (40W)	
33	RAM-18CZ1 618	1	PROPELLOR FAN	
35	RAM-20CW1 609	1	COIL (FOR 2-WAY VALVE)	
36	RAM-20CW1 610	1	COIL (FOR 2-WAY VALVE)	
37	RAM-20CW1 635	1	P.W.B.	
40	RAM-18GZ1 634	2	DRYER	
77	RAM-20CW1 611	1	FUSE (2.5A)	
78	RAM-20CW1 612	1	FUSE HOLDER	
79	RAM-20CW1 613	2	VARISTOR (470NR)	
80	RAM-20CW1 614	3	PHOTO COUPLER (PS-2501)	

NO.	PARTS NO. RAS-20GW1	Q'TY/UNIT	PARTS NAME	REMARK
81	RAM-20CW1 615	4	DIODE BRIDGE (S1WB60)	
82	RAM-20CW1 616	2	RELAY (JM1aN-TMP-DC12V)	
83	RAM-20CW1 617	1	RELAY (JS1-12V)	
84	RAM-20CW1 618	1	REGULATOR IC (7812)	
85	RAM-20CW1 619	1	REGULATOR IC (7805)	
86	RAM-20CW1 620	1	TIMER IC (AN6780)	
87	RAM-20CW1 621	1	LOGIC IC (7432)	
88	RAM-20CW1 622	1	LOGIC IC (7402)	
89	RAM-20CW1 623	1	DRIVER IC (2003)	
90	RAM-20CW1 624	2	DIODE (IN4003)	
91	RAM-20CW1 625	1	SPARK KILLER (XE1201)	
92	RAM-20CW1 626	1	SURGE ABSORBER (S-ABSO-362)	
94	RAM-20CW1 627	1	SOLID STATE RELAY (S26MD02V)	
95	RAM-20CW1 628	1	CAPACITOR (1000↗F, 35V)	
96	RAM-20CW1 629	4	CAPACITOR (0.1↗F, 25V)	
97	RAM-20CW1 630	2	CAPACITOR (0.1↗F, 50V)	
98	RAM-20CW1 631	1	CAPACITOR (100↗F, 50V)	
99	RAM-20CW1 632	3	CAPACITOR (10↗F, 16V)	
100	RAM-20CW1 633	3	CAPACITOR (47↗F, 16V)	
101	RAM-20CW1 634	2	CAPACITOR (1000pF, AC250V)	

MODEL RAM-30GW1

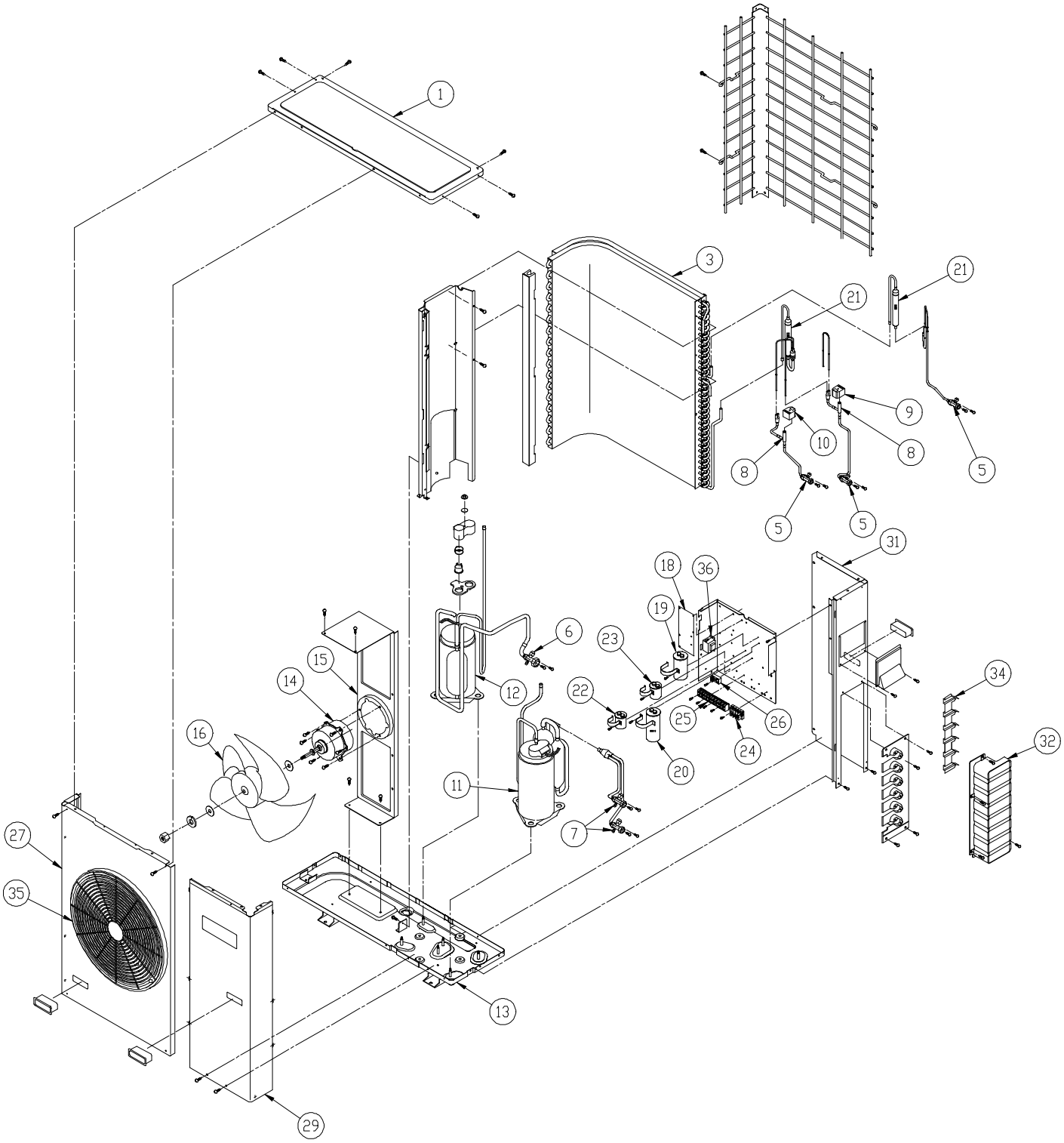

MODEL RAM-30GW1

NO.	PARTS NO. RAS-30GW1	Q'TY/UNIT	PARTS NAME	REMARK
1	RAM-30CW1 601	1	TOP COVER	
3	RAM-30GW1 602	1	CONDENSER	
5	RAM-20GW1 603	3	2-WAY VALVE (1/4")	
6	RAM-30GW1 603	1	3-WAY VALVE (1/2")	
7	RAM-20GW1 604	2	3-WAY VALVE (3/8")	
8	RAM-20CW1 605	2	2-WAY VALVE	
9	RAM-20CW1 609	1	COIL (FOR 2-WAY VALVE)	
10	RAM-30GW1 608	1	COIL (FOR 2-WAY VALVE)	
11	RAM-30GW1 604	1	COMPRESSOR (4KS340DAA)	
12	RAM-30GW1 605	1	COMPRESSOR (4KS210DAA)	
13	RAM-30CW1 606	1	BASE	
14	RAM-30GW1 607	1	FAN MOTOR (75W)	
15	RAM-30CW1 608	1	MOTOR BASE	
16	RAM-30CW1 609	1	PROPELLER FAN	
18	RAM-20CW1 635	1	P.W.B.	
19	RAM-30GW1 609	1	CAPACITOR (35↗F, 400V)	
20	RAM-30GW1 610	1	CAPACITOR (60↗F, 400V)	
21	RAM-18GZ1 634	2	DRYER	
22	RAM-30CW1 611	1	CAPACITOR (4↗F, 500V)	
23	RAM-30CW1 612	1	CAPACITOR (2.3↗F, 400V)	
24	RAM-30GW1 611	1	TERMINAL BOARD(3P)	
25	RAM-30CW1 613	4	TERMINAL BOARD(3P)	
26	RAM-30CW1 614	1	TERMINAL BOARD	
27	RAM-30CW1 615	1	CABINET	
29	RAM-30CW1 616	1	SERVICE COVER	
31	RAM-30CW1 617	1	SIDE COVER	
32	RAM-30CW1 618	1	VALVE COVER	
34	RAM-20CW1 602	1	RUBBER	
35	RAM-30CW1 619	1	SPIDER	
36	RAM-20CW1 606	1	TRANSFORMER	

NO.	PARTS NO. RAS-30GW1	Q'TY/UNIT	PARTS NAME	REMARK
77	RAM-20CW1 611	1	FUSE (2.5A)	
78	RAM-20CW1 612	1	FUSE HOLDER	
79	RAM-20CW1 613	2	VARISTOR (470NR)	
80	RAM-20CW1 614	3	PHOTO COUPLER (PS-2501)	
81	RAM-20CW1 615	4	DIODE BRIDGE (S1WB60)	
82	RAM-20CW1 616	2	RELAY (JM1aN-TMP-DC12V)	
83	RAM-20CW1 617	1	RELAY (JS1-12V)	
84	RAM-20CW1 618	1	REGULATOR IC (7812)	
85	RAM-20CW1 619	1	REGULATOR IC (7805)	
86	RAM-20CW1 620	1	TIMER IC (AN6780)	
87	RAM-20CW1 621	1	LOGIC IC (7432)	
88	RAM-20CW1 622	1	LOGIC IC (7402)	
89	RAM-20CW1 623	1	DRIVER IC (2003)	
90	RAM-20CW1 624	2	DIODE (IN4003)	
91	RAM-20CW1 625	1	SPARK KILLER (XE1201)	
92	RAM-20CW1 626	1	SURGE ABSORBER (S-ABSO-362)	
94	RAM-20CW1 627	1	SOLID STATE RELAY (S26MD02V)	
95	RAM-20CW1 628	1	CAPACITOR (1000↗F, 35V)	
96	RAM-20CW1 629	4	CAPACITOR (0.1↗F, 25V)	
97	RAM-20CW1 630	2	CAPACITOR (0.1↗F, 50V)	
98	RAM-20CW1 631	1	CAPACITOR (100↗F, 50V)	
99	RAM-20CW1 632	3	CAPACITOR (10↗F, 16V)	
100	RAM-20CW1 633	3	CAPACITOR (47↗F, 16V)	
101	RAM-20CW1 634	2	CAPACITOR (1000PF, AC250V)	

HITACHI

RAS-09GZ1 × 3 / RAM-20GW1
RAS-13GZ1
RAS-09GZ1×2 / RAM-30GW1

Printed in TAIWAN R.O.C.