Panasonic
ideas for life

2009

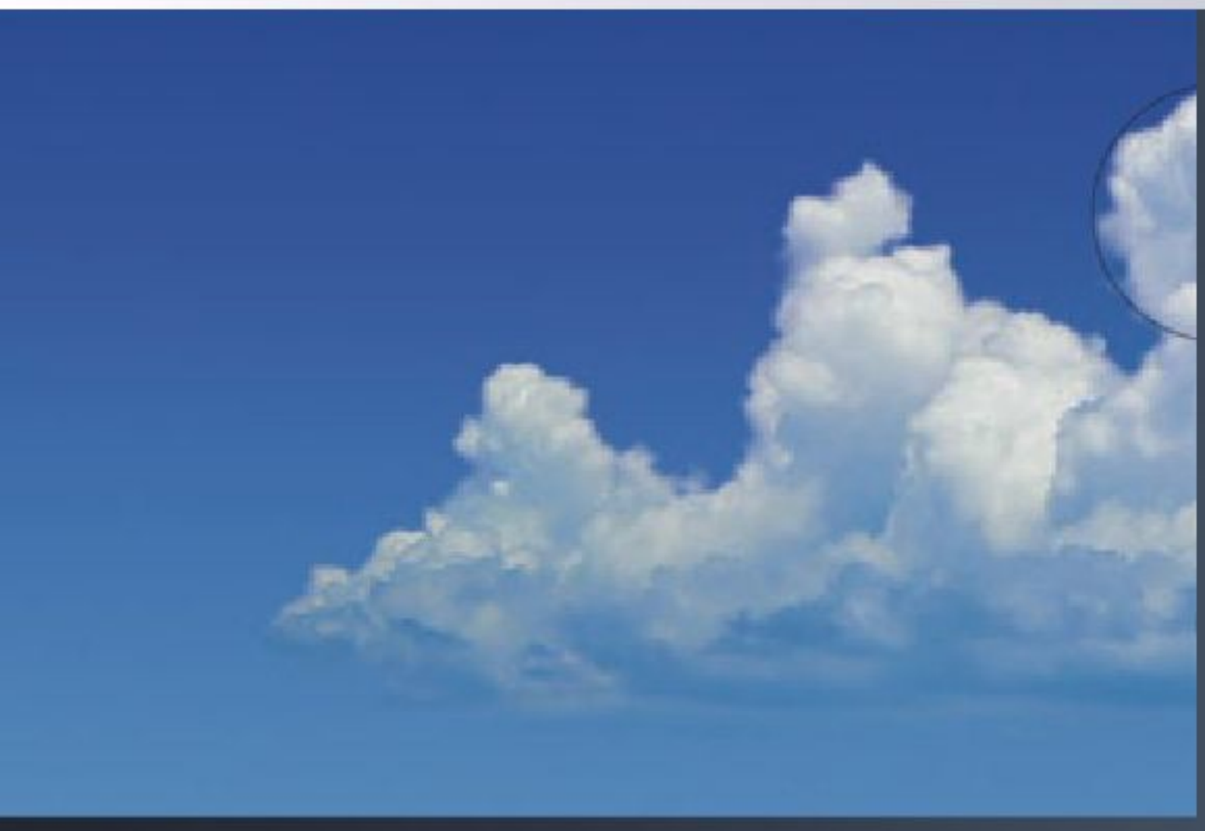

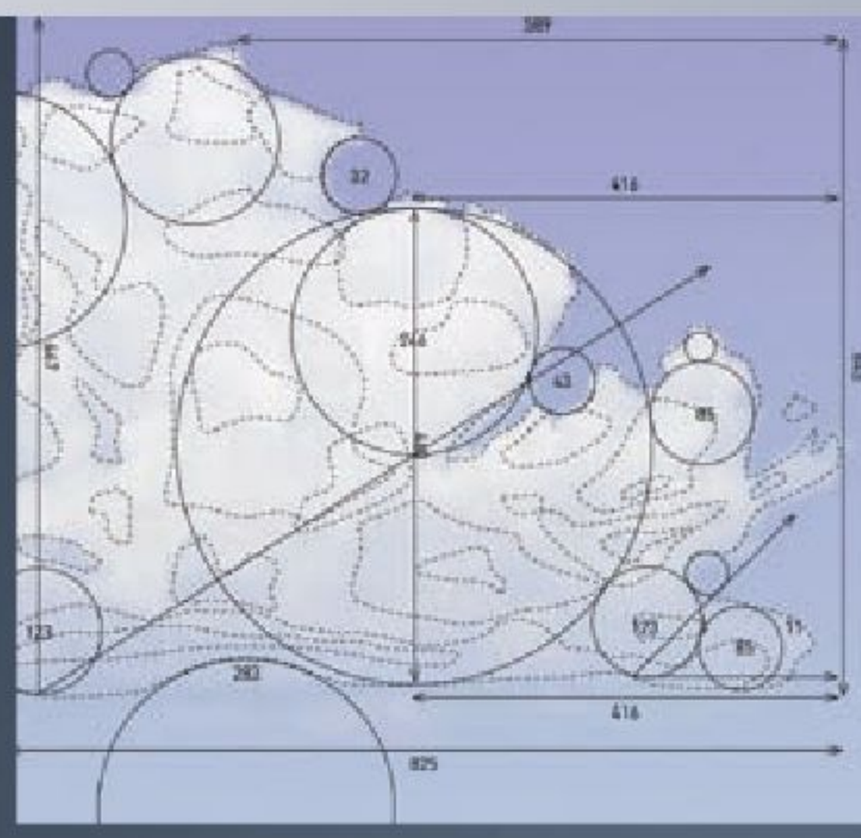

AIR CONDITIONING

healthyair
designed to care for you

Panasonic
ideas for life

AIR CONDITIONING 2009

'ECO IDEAS' FOR PRODUCTS
We will produce energy-efficient products

Target
To increase the number of products with the industry's top-level environmental features based on both internal and external standards.

'ECO IDEAS' FOR MANUFACTURING
We will reduce CO_2 emissions across all our manufacturing sites

Target
To reduce total CO_2 emissions at manufacturing sites worldwide by 300,000 tons by Fiscal 2009. (compared to Fiscal 2006)

'ECO IDEAS' FOR EVERYBODY, EVERYWHERE
We will encourage the spread of environmental activities throughout the world

*Fiscal 2009: April 2009 ~ March 2010

healthyair

PANASONIC AIR CONDITIONING DESIGNED TO CARE FOR YOU

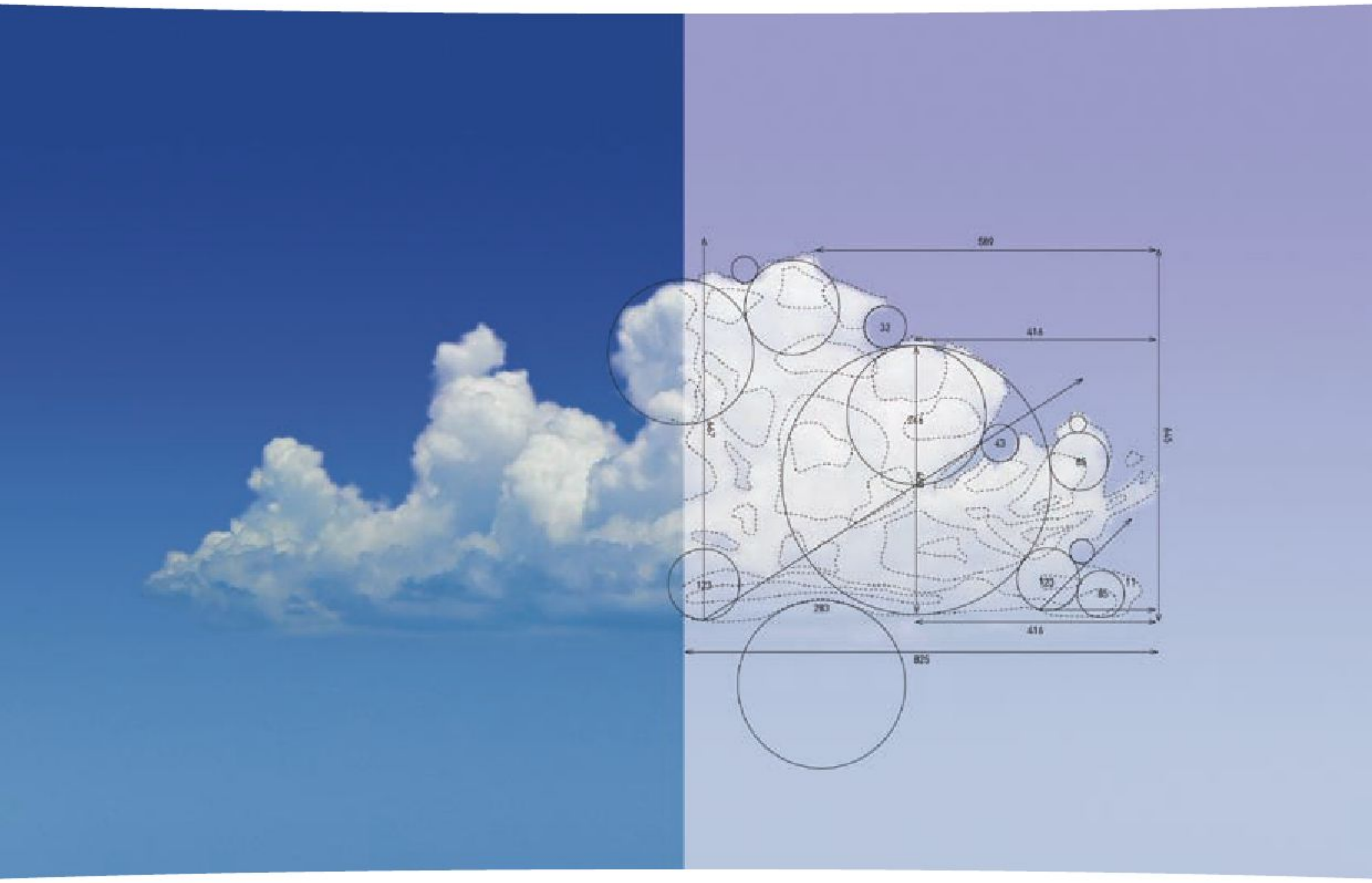

With more than 30 years of experience, exporting to more than 120 countries around the world, Panasonic is unquestionably one of the leaders in the air conditioning sector. With more than 100 million compressors produced, you are assured of the high quality of Panasonic's air conditioners.

Our desire to continually move ahead and our interest in research and development have enabled us to include four ranges of air conditioning solutions among our products – with applications for your home, office, business and warehouse... or wherever air conditioning is needed.
This in turn has enabled us to meet our primary and only goal, which has always been to offer our customers the best possible solutions....

High quality solutions that guarantee healthy air, a meticulous design and, of course, compliance with the most rigorous requirements on energy consumption, the environment and noise emissions.

And not only does making our customers' lives easier matter to us. It also matters that technology enables us to do this. Thus, having a wide range of air conditioners to cover each and every need matters.

BECAUSE OFFERING YOUR BEST
SOLUTION ON AIR CONDITIONING MATTERS.
EVERYTHING MATTERS

For further information visit www.panasonic.eu

DOMESTIC

DOMESTIC AIR CONDITIONER RANGE // 16
FEATURE EXPLANATIONS // 18
FEATURE COMPARISON // 19
WALL MOUNTED ETHEREA // INVERTER + // SILVER // 20
WALL MOUNTED ETHEREA // INVERTER + // WHITE // 24
WALL MOUNTED RE TYPE // STANDARD INVERTER // 28
WALL MOUNTED // INVERTER + // 30
WALL MOUNTED TYPE // INVERTER + // -15°C // 32
WALL-MOUNTED TYPE // STANDARD HEAT PUMP // 34
WALL-MOUNTED TYPE // STANDARD COOLING ONLY // 36
FLOOR CONSOLE TYPE // INVERTER + // 38
SINGLE SPLIT FLOOR OR CEILING TYPE // INVERTER // 40
MULTI SPLIT 2X1 // E-ION PLUS // 42
ETHEREA MULTI SPLIT 2X1 // INVERTER + // 44
ETHEREA MULTI SPLIT 3X1 // INVERTER + // 48
ETHEREA MULTI SPLIT 4X1 // INVERTER + // 50
FREE MULTI // 52
SELF DIAGNOSIS DESCRIPTION AND CHECK POINT TABLE // 60

COMMERCIAL

COMMERCIAL AIR CONDITIONING // 62
COMMERCIAL RANGES // 64
FS TECHNOLOGY // 66
INVERTER + OUTDOOR UNITS // 68
YH INVERTER OUTDOOR UNITS // 69
COMMERCIAL AIR CONDITIONER RANGE // 70
LOW STATIC PRESSURE HIDE AWAY // INVERTER + FS TYPE // 72
LOW STATIC PRESSURE HIDE AWAY // INVERTER FS TYPE // 74
LOW STATIC PRESSURE HIDE AWAY // HEAT PUMP FS TYPE // 76
LOW STATIC PRESSURE HIDE AWAY // COOLING ONLY FS TYPE // 78
HIGH STATIC PRESSURE HIDE AWAY // INVERTER + FS TYPE // 80
HIGH STATIC PRESSURE HIDE AWAY // INVERTER FS TYPE // 82
HIGH STATIC PRESSURE HIDE AWAY // HEAT PUMP FS TYPE // 84
HIGH STATIC PRESSURE HIDE AWAY // COOLING ONLY FS TYPE // 86
4-WAY 60X60 CASSETTE FS // INVERTER TYPE // 88
4-WAY 90X90 CASSETTE // INVERTER + FS TYPE // 90
4-WAY 90X90 CASSETTE // INVERTER FS TYPE // 92
4-WAY 90X90 CASSETTE // HEAT PUMP FS TYPE // 94
4-WAY 90X90 CASSETTE // COOLING ONLY FS TYPE // 96
CEILING // INVERTER + FS TYPE // 98
CEILING // INVERTER FS TYPE // 100
CEILING // HEAT PUMP FS TYPE // 102
CEILING // COOLING ONLY FS TYPE // 104
HIGH STATIC PRESSURE HIDE AWAY 8-10 H.P. // INVERTER US TYPE // 106
TWIN FLEXI SYSTEM FS // INVERTER + // INVERTER // HEAT PUMP // COOLING ONLY FS // 108
CONNECTIVITY // 110
SELF DIAGNOSIS DESCRIPTION AND CHECK POINT TABLE // 112
MINI UM 5 // 114

HEAT RECOVERY VENTILATOR

ENERGY RECOVERY VENTILATORS // 116
ENERGY RECOVERY VENTILATION SYSTEM // 118
AIR CURTAIN // 120

INDUSTRIAL

INDUSTRIAL AIR CONDITIONING // 122
DESIGN FLEXIBILITY // 124
EASY TO INSTALL // 126
PANASONIC CARES ABOUT THE ENVIRONMENT // 128
HI-TECH OUTDOOR UNITS // 130
MINI UM 5 // 132
MX4 RANGE / 134
MX4 SERIES MINIMUM SPACE HEAT PUMP // 136
MX4 SERIES MAXIMUM COP HEAT PUMP // 138
ME4XPQ SERIES HEAT RECOVERY // 140
RANGE OF INDOOR UNITS // 142
KM3 SERIES URBAN MULTI WALL INVERTER R410A TYPE // 144
CEILING INVERTER TYPE TM3 SERIES URBAN MULTI R410A // 145
CONSOLE TYPE PM3 SERIES URBAN MULTI R410A // 146
CONSOLE WITHOUT CASING RM3 SERIES URBAN MULTI R410A // 147
1-WAY CASSETTE TYPE DM3 SERIES URBAN MULTI R410A // 148
2-WAY CASSETTE TYPE LM3 SERIES URBAN MULTI R410A // 149
4-WAY CASSETTE 60X60 TYPE YM3 SERIES URBAN MULTI R410A // 150
4-WAY CASSETTE TYPE UM4 SERIES URBAN MULTI R410A // 151
LOW SILHOUETTE DUCT TYPE FM3 SERIES URBAN MULTI R410A // 152
HOTEL TYPE DUCT NM3 SERIES URBAN MULTI R410A // 154
HIGH PRESSURE DUCT TYPE EM3 SERIES URBAN MULTI R410A // 155
MX4 OUTDOOR UNIT DIMENSIONS // 156
ME4 OUTDOOR UNIT DIMENSIONS // 158
LIST OF OPTIONAL ACCESSORIES // 160
ME4 HR BOX // 161
MX4 R410A BRANCHES AND HEADERS // 161
BRANCHES AND HEADERS // 161
INDIVIDUAL CONTROL SYSTEMS // 164
CENTRALISED CONTROL SYSTEMS // 166
URBAN CONTROLLER // 168
CONTROL NETWORK FOR AIR CONDITIONING SYSTEMS // 172

PANASONIC AIR CONDITIONING, PROFESSIONAL SOLUTIONS FOR PROFESSIONAL PEOPLE WHO WANT TO OFFER THEIR CLIENTS THE BEST

DOMESTIC More than ever before, Panasonic has developed a range of products designed for you and your clients.
The main new feature in the Domestic line is, without doubt, the Etherea range.
With its innovative design, high efficiency and incomparable purification system, the range has been designed with your clients in mind. Above all, it is also a range for air conditioning professionals, such as yourself, thanks to its broad range of products which are capable of conditioning rooms of all sizes – always with optimal efficiency and incomparable ease of installation. The Etherea range guarantees that you are offering your clients the very best.

COMMERCIAL The semi-industrial range is constantly expanding so that you can always offer your clients the best solutions: high performance, silent machines and a complete range of ducts, cassettes and ceiling installations. Our machines are designed for you and are easy to install – enabling you to be increasingly competitive. Furthermore, we help you to improve the energy efficiency of your installations with Panasonic's new, extremely efficient enthalpy regenerator.

INDUSTRIAL And to cap it all, the industrial range considerably improves efficiency thanks to all of Panasonic's efforts in this area – large buildings benefit from a high-level of comfort with less consumption – showing that the company is serious in its wager to conserve the environment.

DOMESTIC AIR CONDITIONING

ECO INSPIRED DESIGN.
COOL, STYLISH AND ENERGY-SAVING

PANASONIC AIR CONDITIONERS HAVE BEEN REDESIGNED IN A BEAUTIFUL AND STYLISH WAY.
WITH A HIGHLY FUNCTIONAL AND BEAUTIFUL NEW DESIGN, THEY ADD REFINEMENT TO THE INTERIOR OF YOUR ROOM.
THE FRESH NEW HORIZONTAL CURVED FORM CHARACTERIZES THE AIR CONDITIONER'S NEW DESIGN. THE GENTLE CURVE AT THE CENTER STYLISHLY CONCEALS THE COMPLEX HIGH-PERFORMANCE MECHANISMS INSIDE, WHILE THIN ENDS EMPHASIZE THE AIR CONDITIONER'S SLIM STYLE. THIS ALLOWS IT TO BLEND INTO THE WALL IN AN ATTRACTIVE MANNER, AND TO ADD HARMONY TO VIRTUALLY ANY ROOM INTERIOR.

24h quality air control PATROL SENSOR

PATROL SENSOR. Air is monitored both during air conditioner operation and when switched off. When dirt is detected, the air purifying function starts up to immediately clean the air in the room.

pure air system e-ION PLUS

E-ION PLUS AIR PURIFYING SYSTEM. Active e-ions are shot out to catch and inactivate airborne bacteria and mould. The positively charged mega filter attracts dust to thoroughly clean the room.

perfect humidity air MILD DRY

MILD DRY. Fine control helps prevent a rapid decrease in room humidity while maintaining the set temperature.
(Maintains an RH* up to 10% higher than cooling operation. *RH: Relative Humidity)
Ideal when sleeping with the air conditioner on.

A energy saving air INVERTER+

INVERTER PLUS SYSTEM. The Inverter plus range provides greater efficiency, more comfort and less noise than classic inverter units. This is Panasonic's top-end, environmentally friendly range. It is the range of the future within your reach today. Energy saving A+ products improve on the characteristics of standard air conditioners by over 20% regarding a standard A class. This means 20% less consumption and 20% off your electric bill.

20dB quiet air SUPER QUIET

SUPER QUIET MODE. Thanks to its latest generation compressor and its twin blade fan, our outdoor unit is one of the most silent on the market. The indoor unit emits an almost imperceptible 23 dB. And this can be reduced by 3 dB, bringing the sound level to an almost inaudible point.

eco ideas

ECOIDEAS. Panasonic inverter air conditioners provide exceptional energy-saving performance that ranks among the highest in the industry. This dramatically cuts electricity consumption and CO_2 emissions, allowing an environment-friendly operation.

5years warranty air

5 YEARS. Warranty on the compressor.

ETHEREA

designed to care for you

RELAXATION

A comfortable and open living room full of light can create a kind of resort atmosphere. Here, the air conditioner's smooth front panel reflects the light shining through the trees outside and into the room, increasing the sense of relaxation.
The gently curving shape is conceptualized by a yacht's sail in the wind. It symbolizes the spreading of the breeze that is led into the room by the air conditioner.

COMFORT

A cozy room, surrounded by your favorite furniture. Panasonic air conditioners fit in wonderfully here too, even with warm, cozy interiors, and their gentle design helps to create comfortable living spaces.
The new models feature a refreshingly beautiful and sleek, ventless front grille. In addition to its sophisticated design, this grille prevents dust from accumulating, to simplify cleaning and maintenance. The front panel can also be easily removed for washing.

LUXURY

A lavish living room with a marble floor and leather sofa. The high-quality design of Panasonic air conditioners blends in perfectly even with luxurious room interiors such as this.
While also accentuating the design, the newly designed Patrol Sensor monitors the room air.

AVALLABLE IN KITS: XE7-JKE / XE9-JKE / XE12-JKE / XE15-JKE / XE18-JKE /XE21-JKE / E7-JKE / E9-JKE / E12-JKE / E15-JKE / E18-JKE / E21-JKE /E24-JKE / E28-JKE / 2XE77-JKE / 2XE79-JKE / 2XE712-JKE / 2XE99-JKE / 2XE912-JKE / 2XE1212-JKE / 3XE7712-JKE / 3XE7715-JKE / 4XE77712-JBE / 4XE77715-JBE / 4XE77712-JKE / 4XE77715-JKE

E-ION AIR PURIFYING SYSTEM WITH NEWLY DESIGNED PATROL SENSOR

GIVE THE BEST TO YOUR CUSTOMERS, THE E-ION PLUS AIR PURIFYING SYSTEM IS MORE EFFICIENT THAN EVER WITH ITS INNOVATIVE PATROL SENSOR AND 24H CLEAN AIR SYSTEM. FURTHERMORE ETHEREA IS A 2-IN-1 WITH AIR PURIFIER AND AIR CONDITIONER WITH FULLY INDEPENDENT OR SIMULTANEOUS OPERATION.

THIS IS PANASONIC'S REVOLUTIONARY MECHANISM

ROOM AIR LOOKS CLEAN, BUT IT'S FILLED WITH INVISIBLE PARTICLES.
RELEASED E-IONS CATCH DUST PARTICLES AND BRING THEM BACK TO THE FILTER!

DETECTS

NEWLY DESIGNED PATROL SENSOR
The Patrol Sensor monitors the air and informs you of the dirt level through colour indications. Air purifying starts as soon as dirt is detected.

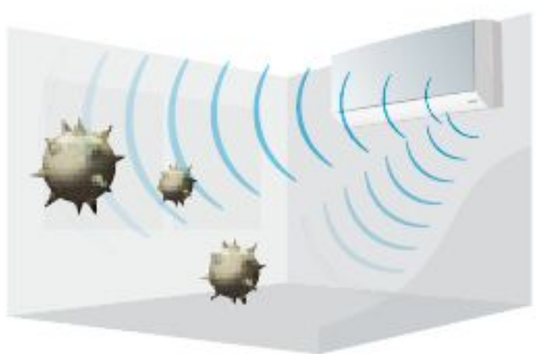

CATCHES & INACTIVATES

E-ION ACTION
Three trillion e-ions are released to catch floating dust particles. The ions also inactivate bacteria, mould and viruses.

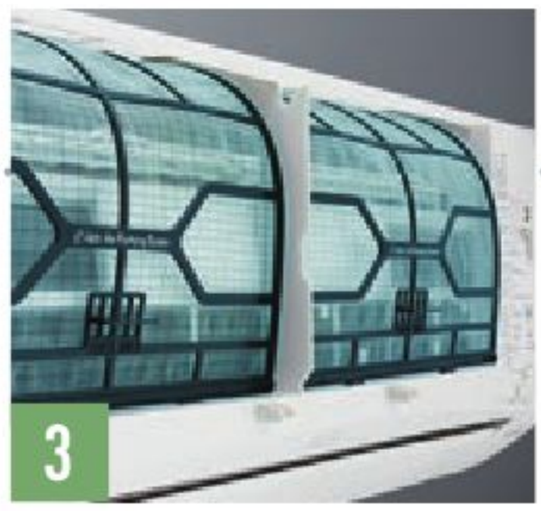

CAPTURES ELECTRICALLY

E-ION FILTER
The filter is positively charged, so negatively charged dust particles are electrically attracted. This electrical action assures that dust is efficiently captured.

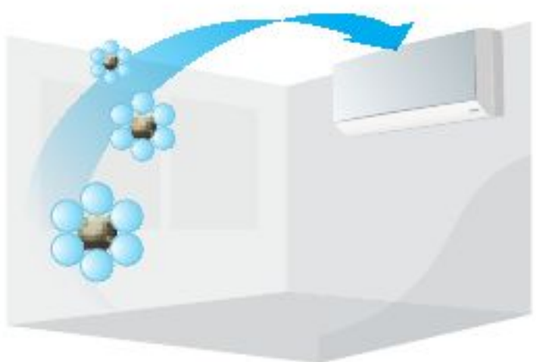

1)3 trillion is the simulated number of active e-ions under the mentioned conditions.
Actual measured active e-ions at the centre of the room (13m²):100k/cc Calculated number of active e-ions in the entire room assuming they are evenly distributed.

Available in Kits: XE7-JKE / XE9-JKE / XE12-JKE / XE15-JKE / XE18-JKE / XE21-JKE / E7-JKE / E9-JKE / E12-JKE / E15-JKE / E18-JKE / E21-JKE / E24-JKE / E28J-KE / 2E77-HKE-1 / 2E712-HKE-1 / 2E912-HKE / 2E1212-HKE / 2XE77-JKE / 2XE79-JKE / 2XE712-JKE / 2XE99-JKE / 2XE912-JKE / 2XE1212-JKE / 3XE7712-JKE / 3XE7715-JKE / 4XE77712-JBE / 4XE77715-JBE / 4XE77712-JKE / 4XE77715-JKE

ETHEREA

Unique Features

24-HOUR CLEAN AIR

NEWLY DESIGNED PATROL SENSOR

The patrol sensor monitors microscopic dirt in the air and air purifying starts as soon as it is detected. It continues operating even when the air conditioner is switched OFF to maintain room air quality.

HYGIENIC

E-ION ACTION

Active e-ions inactivate more than 99% of airborne bacteria and mould to make them harmless.

INACTIVATING EFFECT

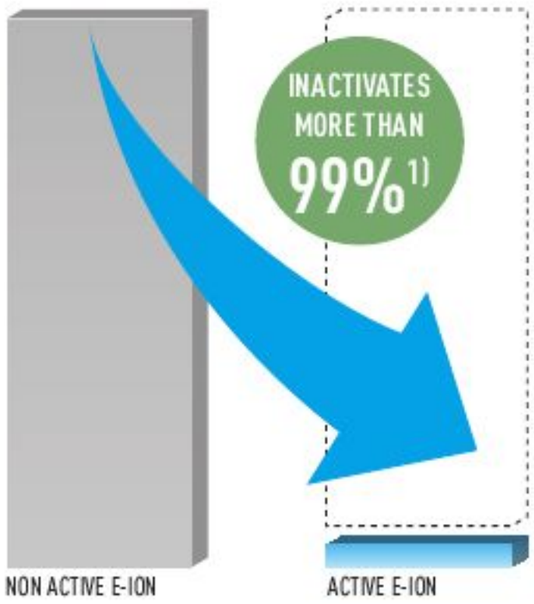

TARGET SUBSTANCES

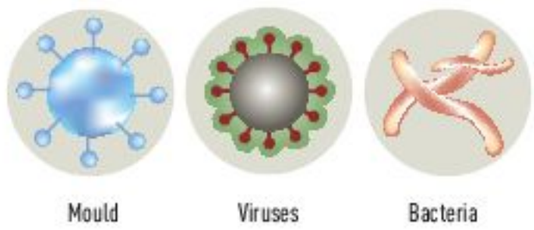

FASTER PURIFICATION

ELECTRIC CHARGE ATTRACTION

The positively charged filter attracts negatively charged dust particles, providing powerful air purification.

ACTIVE E-IONS CATCH DUST PARTICLES

DUST IS NEGATIVELY CHARGED

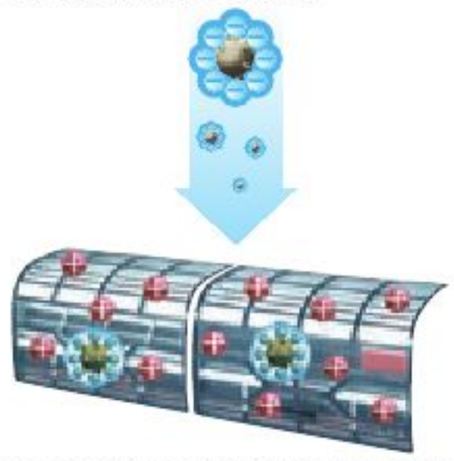

THE ENTIRE MEGA SIZE FILTER IS POSITIVELY CHARGED TO POWERFULLY ATTRACT NEGATIVELY CHARGED DUST.

EFFECTIVE CAPTURE

BIGGER, FINER E-ION FILTER

A wider area and finer mesh enables the filter to firmly capture minute micro-level particles.

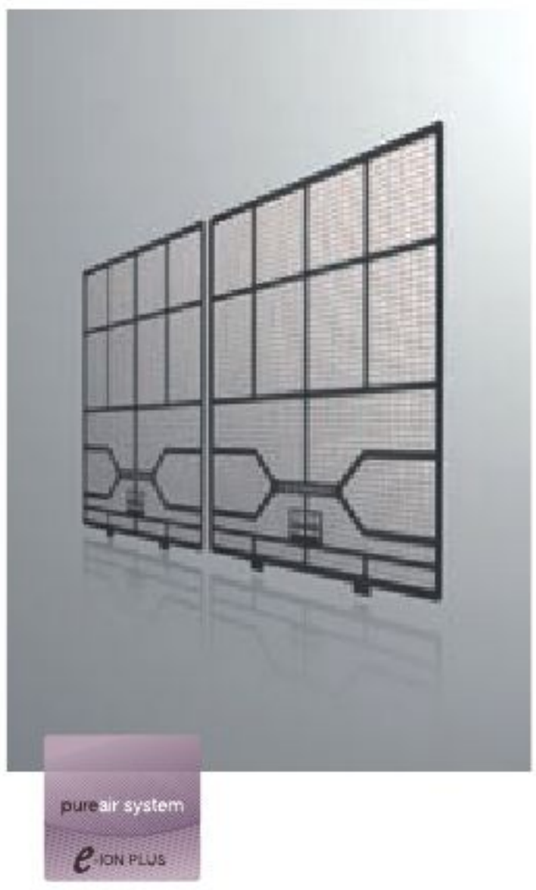

2-IN-1 VALUE WITH AN AIR PURIFIER

Panasonic air conditioners also offer the function of an air purifier. You can enjoy both cool air with air conditioning and clean air with air purification from a single unit. Thus, it's also really economical.

AIR CONDITIONER:
MOISTURE (DEHUMIDIFYING ONLY) CONTROL.
TEMPERATURE CONTROL.

AIR PURIFIER:
DUST COLLECTION.
INACTIVATING VIRUSES, BACTERIA, MOULD.

PURE AIR SYSTEM:
MOISTURE (DEHUMIDIFYING ONLY) CONTROL.
TEMPERATURE CONTROL.
DUST COLLECTION.
INACTIVATING VIRUSES, BACTERIA, MOULD.

MILD DRY COOLING 2)

Fine control helps prevent a rapid decrease in room humidity while maintaining the set temperature.
Maintains an RH (Relative Humidity) up to 10% higher than cooling operation.
Ideal when sleeping with the air conditioner on.

ROOM HUMIDITY COMPARISON

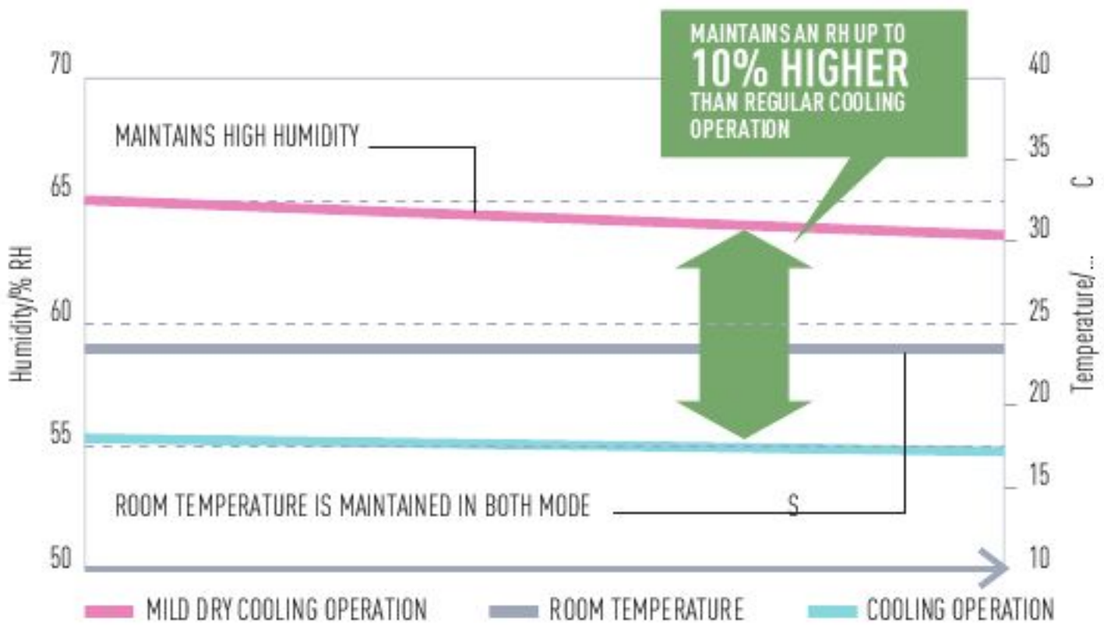

1) 99% inactivation was certified as indicated below. Certified by Japan Food Research Laboratories. Test report number: No. 205010211-001 Bacteria: Staphylococcus aureus subsp. aureus (NBRC12732). Test report number: No. 204101750-001 Virus: Influenza virus A.

2) Only for Etherea 1x1.

OUTSTANDING ENERGY-SAVING PERFORMANCE

THE ADVANTAGES OF INVERTER AIR CONDITIONERS.

Comparing inverter and non-inverter air conditioners to cars...

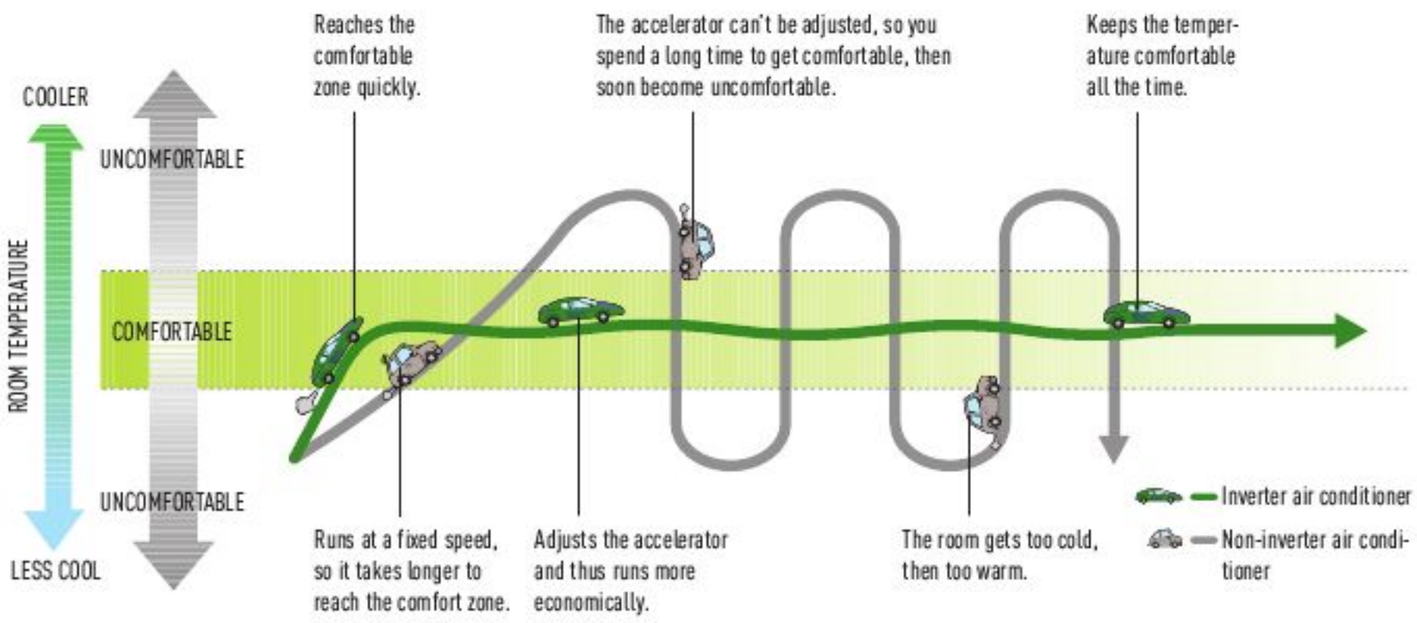

YOU WILL ALWAYS BE COMFORTABLE WITH AN INVERTER AIR CONDITIONER. AFTER REACHING THE SET TEMPERATURE QUICKLY, THE POWER WILL BE ADJUSTED SMOOTHLY TO KEEP THE TEMPERATURE CONSTANT SO THERE WILL BE NO SHARP TEMPERATURE CHANGES AND YOU WILL SAVE POWER. THE AMPLE RANGE OF OUTPUT POWERS ALSO GUARANTEES A PLEASANT TEMPERATURE AT ALL TIMES, EVEN WHEN THE NUMBER OF PEOPLE IN THE ROOM FLUCTUATES.

THIS WAY, INVERTER AIR CONDITIONERS PROVIDE MORE PRECISE TEMPERATURE CONTROL THAN NON-INVERTER MODELS.

eco ideas

64% CUT IN POWER CONSUMPTION FOR BIG SAVINGS

Panasonic inverter air conditioners provide exceptional energy-saving performance that ranks among the highest in the industry. This dramatically cuts electricity consumption and CO_2 emissions, allowing an environment-friendly operation.

1) Comparison of cumulative electricity consumption during heating to reach the setting temperature (Panasonic in-house comparison) Test conditions: Indoor and outdoor temperature: 7°C/ Setting temperature: 25°C/ Fan speed: High.
2) Comparison of cumulative electricity consumption during 8 hours of cooling (Panasonic in-house comparison) Test conditions: Room temperature at start: 35°C/ Setting temperature: 25°C.

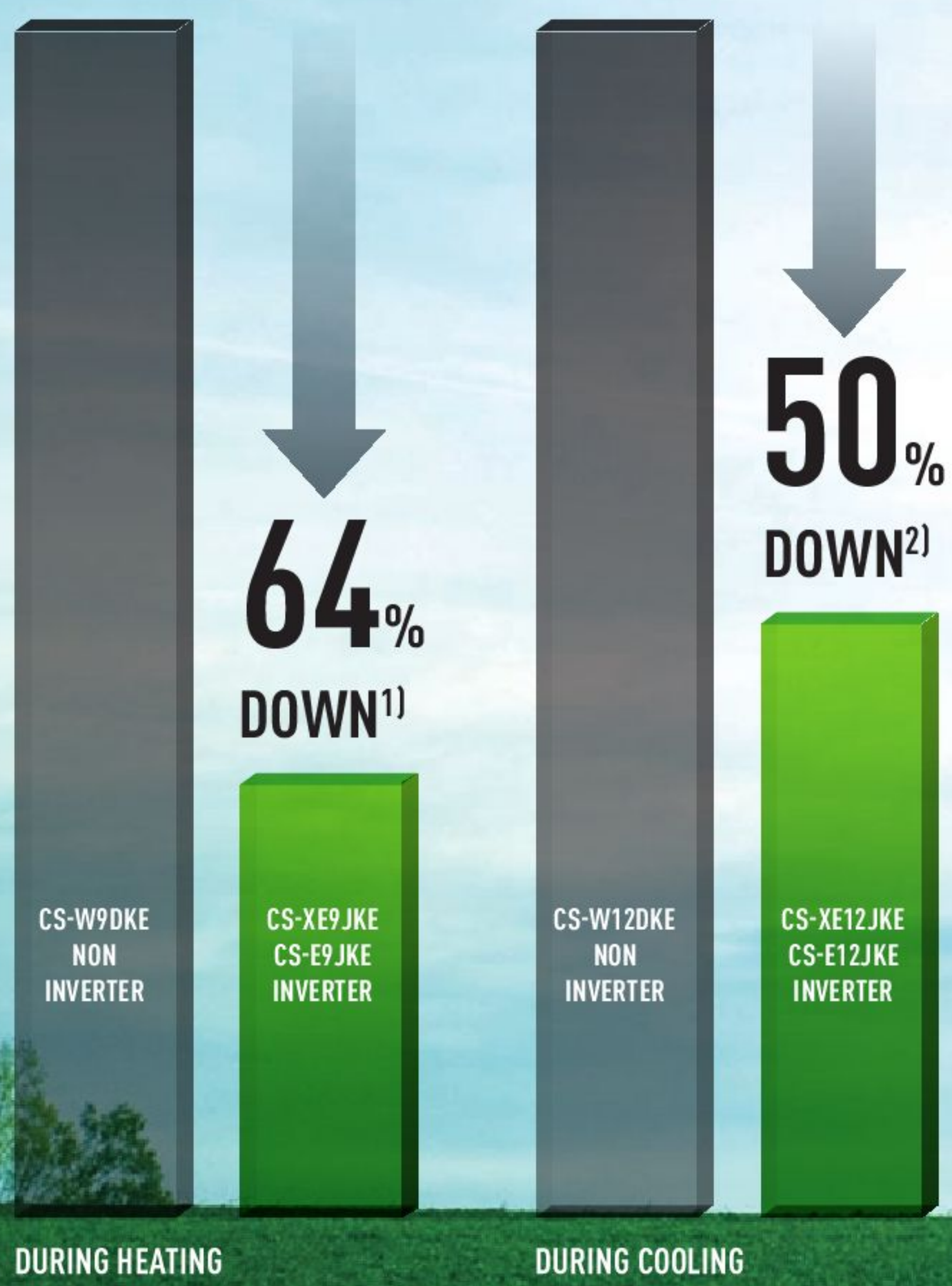

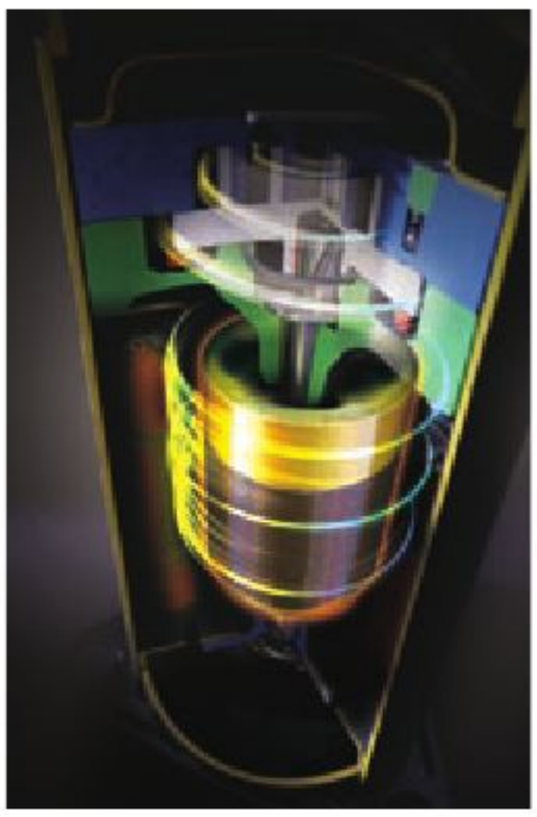

HOW CAN AN INVERTER SAVE ENERGY?

The inverter constantly adjusts compressor rotation speed to provide optimum performance at all times. This extremely precise operation enables quick cooling while reducing power consumption compared to conventional non-inverter units.

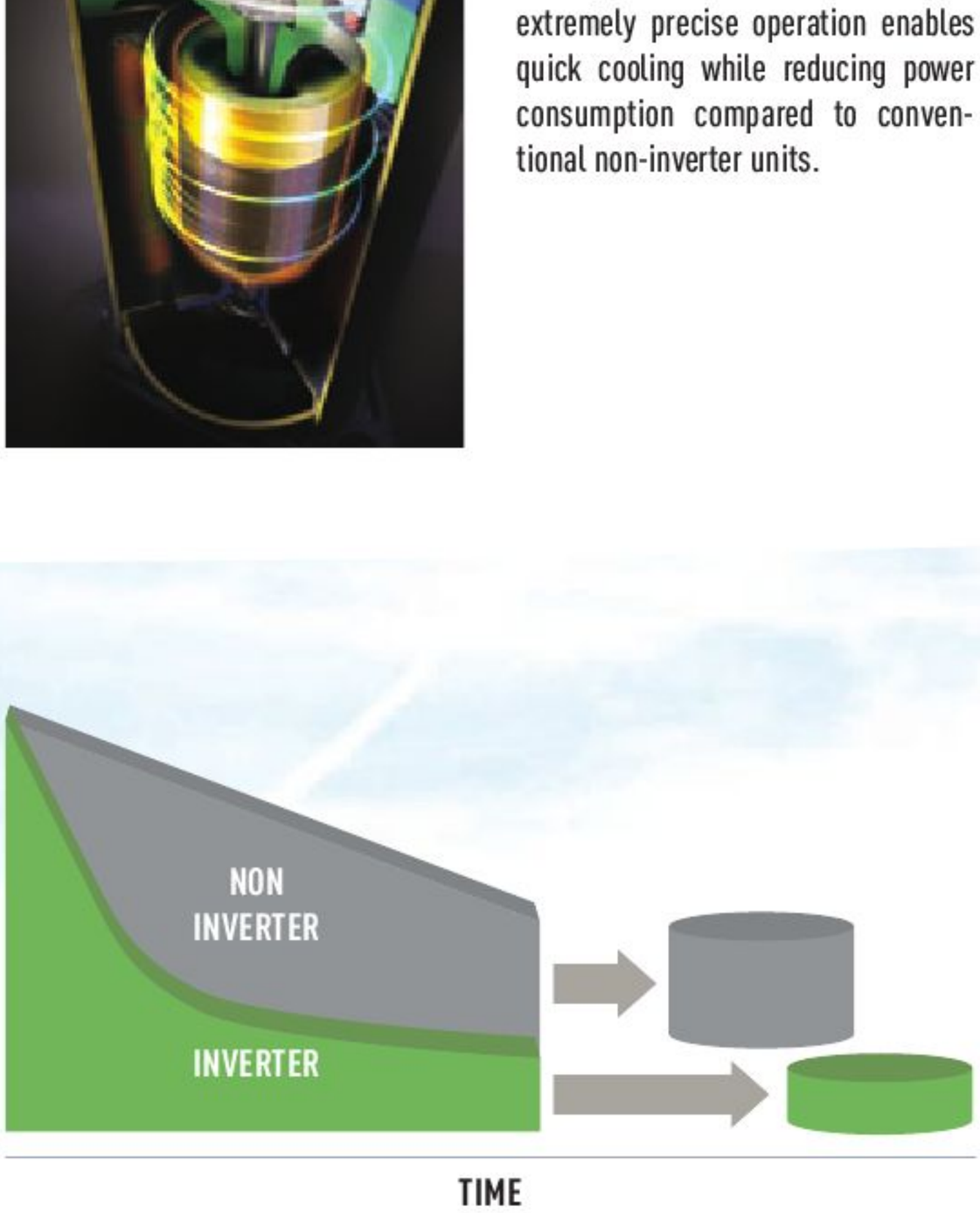

THE KEY LIES IN THE INVERTER'S SMART CONTROL

After reaching the set temperature, an inverter air conditioner continues operating with minimum power to avoid unnecessary electricity consumption.

ENERGY EFFICIENCY CLASSIFICATIONS

A European Community directive requiring energy labelling of domestic appliances came into effect in 2005. Since then, all manufacturers have been required to label each product with an efficiency level represented by a letter from A to G. This means that a class B domestic appliance consumes approximately 10% more than an A, a C 20% more than an A, etc.

As well as the corresponding letter, further information on each domestic appliance appears on the right-hand part of the sticker.

In the tables which appear alongside the product in this catalogue, the energy efficiency is referenced with the corresponding letter in white on a black arrow.

A: THE MOST EFFICIENT

Our new models have obtained the highest energy performance classification, Class A, which puts them in the highest energy saving class. This means you can use these models every day, without having to worry about the electric bill.

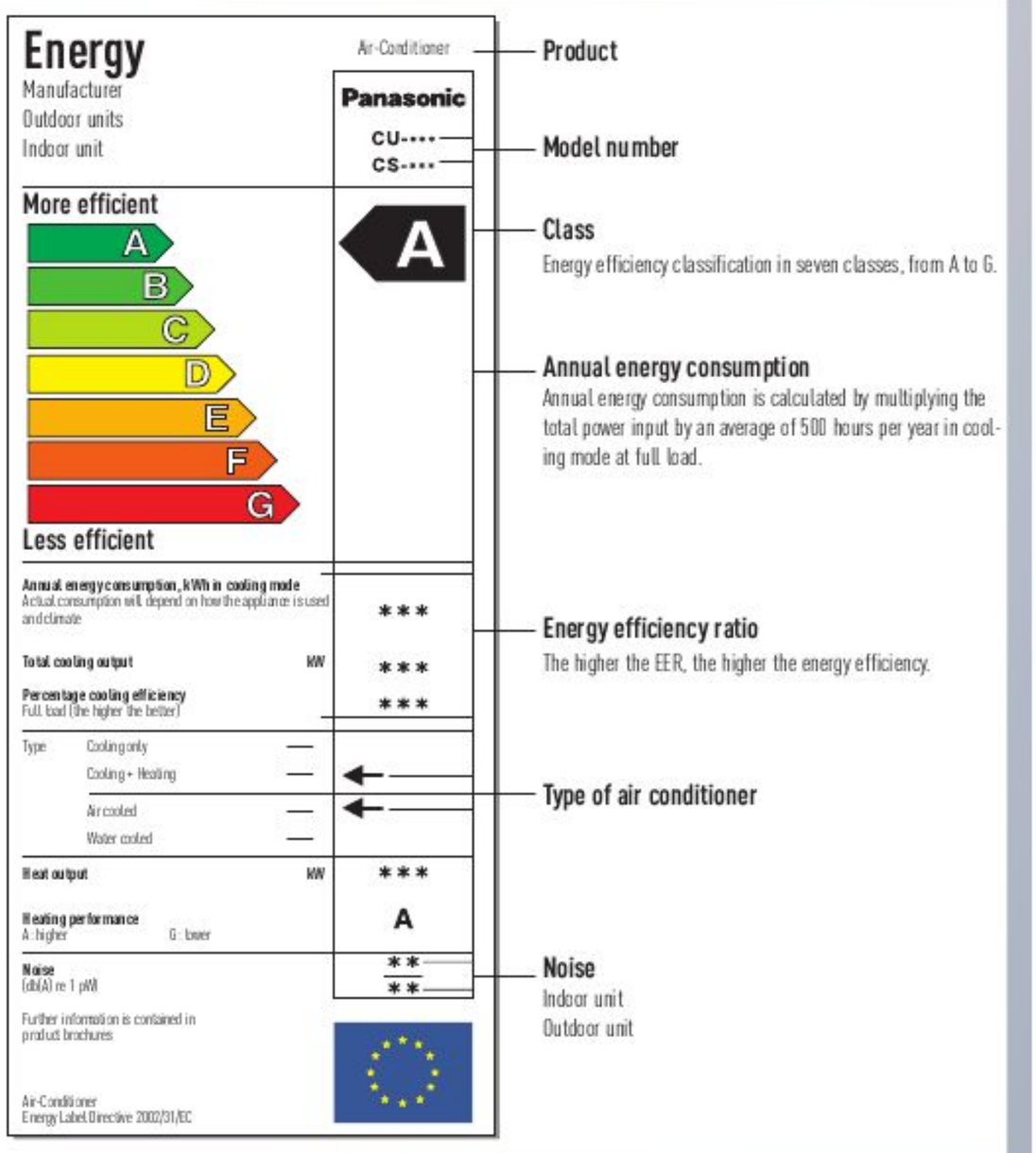

CLASSIFICATIONS

There are seven energy efficiency classifications, from A to G.
The highest efficiency level is A and the lowest is G.

Unit energy efficiency class in cooling mode		Unit energy efficiency class in heating mode	
A	3.20 < EER	A	3.60 < COP
B	3.20 ≥ EER > 3.00	B	3.60 ≥ COP > 3.40
C	3.00 ≥ EER > 2.80	C	3.40 ≥ COP > 3.20
D	2.80 ≥ EER > 2.60	D	3.20 ≥ COP > 2.80
E	2.60 ≥ EER > 2.40	E	2.80 ≥ COP > 2.60
F	2.40 ≥ EER > 2.20	F	2.60 ≥ COP > 2.40
G	2.20 ≥ EER	G	2.40 ≥ COP

These classifications are for split and multi split air conditioning units.

PANASONIC TECHNOLOGY FOR COMFORT

Extremely quiet. We have succeeded in making one of the most silent air conditioners on the market.
The indoor unit runs silently with a slow fan speed. When you press the Quiet Mode button on the remote control, the operating sound level reduces even further, down to 20 dB. 20 dB is equivalent to the silence of night-time in the countryside!
We produce discreet air conditioners which do not disturb you, even when the room is at its quietest.

ETHEREA

INVERTER

FURTHER INVERTER ADVANTAGES

- Panasonic's Inverter air conditioners control room temperature much better than models which work at a constant speed.
- An Inverter air conditioner has 64% greater heating capacity than models which work at a constant speed. They provide more than enough power to heat a room in winter [1].
- Inverter models distribute the warm air over a wider area than electric radiators. They do not pollute the room like paraffin heaters do. There is no fire risk as there is with gas heaters. Air conditioners transfer heat to the room air, so they are safe and practical.
- Tests have shown that a Panasonic Inverter air conditioner consumes half the electricity of non-inverter models [2].

1) Comparison of cumulative electricity consumption during heating to reach the setting temperature (Panasonic in-house comparison) Test conditions: Indoor and outdoor temperature: 7°C/ Setting temperature: 25°C/ Fan speed: High.
2) Comparison of cumulative electricity consumption during 8 hours of cooling (Panasonic in-house comparison) Test conditions: Room temperature at start: 35°C/ Setting temperature: 25°C.

QUICK COMFORT

As soon as the an inverter air conditioner is switched on, it provides the exact amount of power needed to rapidly cool or heat of the room. This enables it to reach the set temperature in about a quarter the time required by non-inverter models. So you're confortable soon after you arrive home on a hot summer day, or on a cold winter morning.

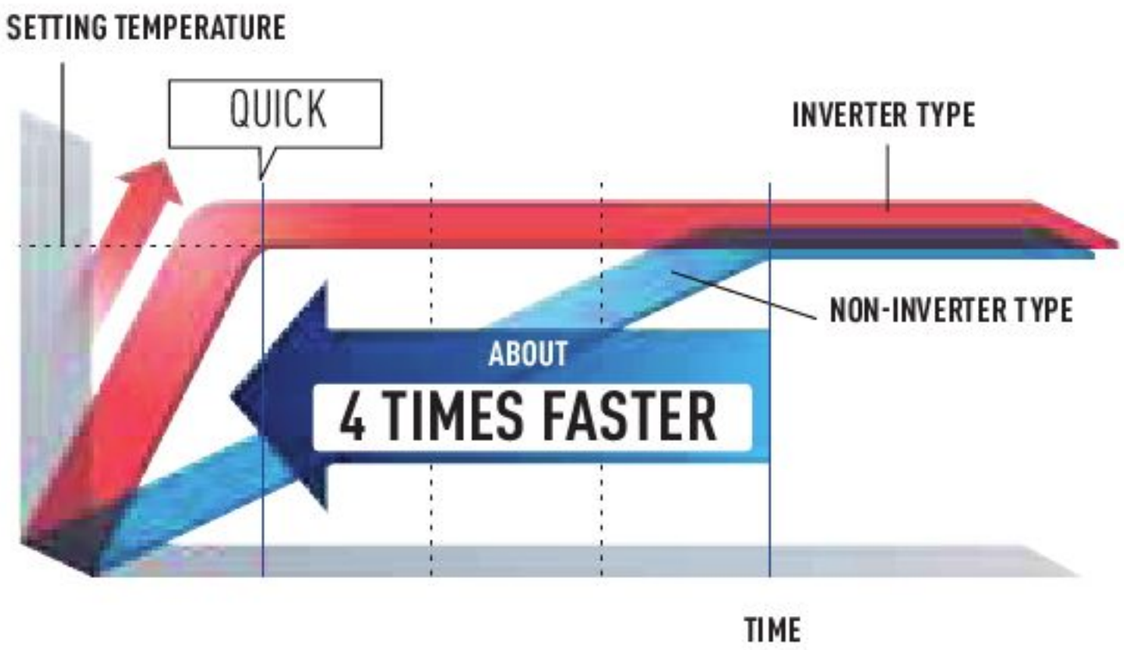

MORE PRECISE TEMPERATURE CONTROL

An inverter varies output power to enable more precise temperature adjustment. In comparison, a non-inverter air conditioner controls the temperature by switching on and off. This results in temperature fluctuations, leading to uneven cooling. With an inverter model, you're assured a uniform room temperature for extra comfort.

COOLING POWER ADJUSTS TO MEET CHANGES IN ROOM TEMPERATURE

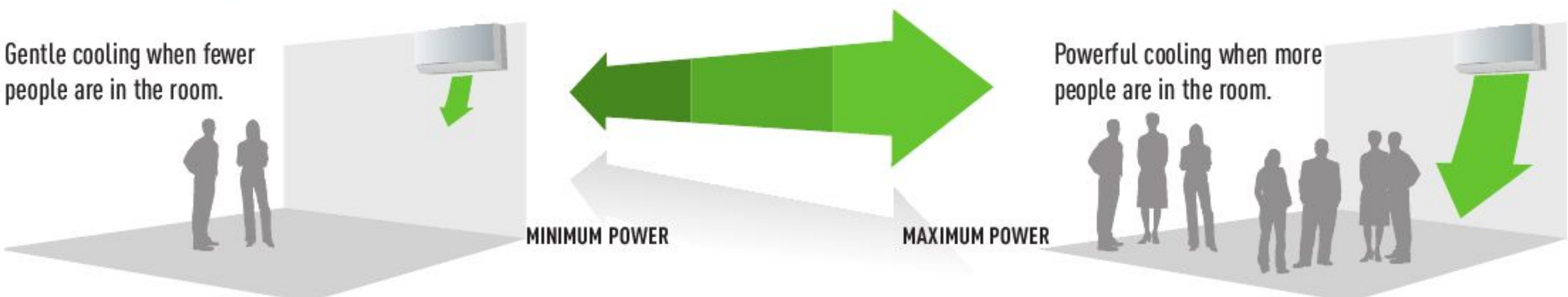

POWERFUL AIRFLOW WITH A LARGER CROSS FLOW FAN

Panasonic's new models feature a large cross flow fan with improved design.The fan's larger diameter dramatically increases airflow. A powerful breeze rapidly cools the room to a comfortable temperature. And because the breeze reaches a wider area, the temperature is evenly distributed throughout the room, providing extra comfort.

For JKE series Inverter models except multy type.

THE SECRET OF SAVING ENERGY. DIFFERENT RANGES THAT MEET ALL TYPES OF REQUIREMENTS

eco ideas

PANASONIC MAKES THE WIDEST POWER RANGE ON THE MARKET. IN ORDER TO MEET THE REQUIREMENTS OF EACH AND EVERY CLIENT, THIS LINE OF MODELS MAKES IT POSSIBLE TO ADJUST CONSUMPTION TO MATCH THE CHARACTERISTICS OF EVERY ROOM BY CHOOSING THE IDEAL POWER RANGE. NO COMFORT IS SACRIFICED AND POWER CONSUMPTION IS NOT EXCEEDED.

Panasonic's exclusive 4.5kW models (E15, XE15, RE15) thus provide the answer to a large number of situations in which more power is required than that offered by the 3.5kW models, but for which the 5kW units are too powerful. Furthermore, using a 4.5kW instead of a 5kW unit, you will save money due to the greater efficiency of the E15 and you will win on design because the E15 is the same size as the E12, and is 18% smaller than the 5kW. Using the E15 range, everybody is a winner, and your customer pays for exactly what he needs!

Using our E15, you can save up to 15% compared with an E18 and still obtain a perfect temperature setting in a 30m² room.*

SAVE UP TO 15%

In the same way, Panasonic's exclusive 2.2kW models (E7, XE7) guarantee maximum comfort at a minimum price and functioning cost – for small surface areas where the minimum standards of all the other 2.8kW models exceed real air conditioning requirements.

Using an E7, you can save up to 14% compared with an E9 and still obtain a perfect temperature setting in an 11m² room.*

SAVE UP TO 14%

SAVE UP TO 15%

SAVINGS WITH CORRECT DIMENSIONING OF AIR CONDITIONING UNIT : CASE STUDY FOR A 12M² BEDROOM OR ON A LIVING ROOM OF 33M²*

	ANNUAL CONSUMPTION (KW)	SAVING	USING A E7 AND NOT A E9 ON A 12M² ROOM
KIT-XE7-JKE	235	13,8%	Furthermore, with a E7, you are not only saving money, but the E7 is quieter than the E9!
KIT-XE9-JKE	272,5		

	ANNUAL CONSUMPTION (KW)	SAVING	USING A E15 AND NOT A E18 ON A 33M² LIVING ROOM
KIT-E15-JKE	630	14,3%	Furthermore, with a E15, you are not only saving money, but have smaller and discrete indoor units, and incredibly silencious (only 20 db!)
KIT-E18-JKE	735		

PANASONIC'S MULTI SPLIT. CONDITIONS MORE, CONSUMES LESS

If air conditioning requirements exceed the ambit of a single room, Panasonic offers you a very extensive range of possibilities with up to 4 indoor units connected to a single outdoor unit. In this way, not only is the purchase price cheaper, the installation easier, the space for the outdoor units reduced and the elevation difference bigger, but consumption is also reduced enormously. This is because the consumption of one outdoor unit which powers four indoor units is much less than the sum of four outdoor units of individual splits.

You can reduce consumption by up to 36% using the multi-split as opposed to the 1x1!*

REDUCE CONSUMPTION BY UP TO 36%

ANNUAL CONSUMPTION SAVINGS WITH MULTISPLIT: USING A MULTISPLIT SYSTEM, YOU CAN SAVE MORE!

	ANNUAL CONSUMPTION (KW)	"SAVINGS USING MULTISPLIT INSTEAD OF MONOSPLIT"
7+12 in Multi	625	9.0% SAVING
7+12 in 1X1	687	
12+12 in Multi	760	15.9% SAVING
12+12 in 1X1	904	
7+7+12 in Multi	615	33.3% SAVING
7+7+12 in 1X1	922	
7+7+7+12 in Multi	1,065	8.0% SAVING
7+7+7+12 in 1X1	1,157.5	
7+9+9+12 in Multi	790	35.9% SAVING
7+9+9+12 in 1X1	1,233	

Furthermore, using a multisplit system, you are saving place on the outdoor unit, making easy installation on small places. The multi system also have long elevation difference and long tubing, which gives flexibility on the installation on the roof.

DOMESTIC AIR CONDITIONER RANGE		COOLING POWER Rated kW (Min-Max)	EER	HEATING POWER Rated kW (Min-Max)	COP	NOISE LEVEL DB* COOLING / HEATING	DIMENSIONS MM (H x W x D)	FOR STANDARD ROOMS BETWEEN M²* 10 20 30 40
ETHEREA INVERTER DELUXE XE	KIT-XE7-JKE	2.05 (0.70-2.40)	4.36 A	2.80 (0.70-4.00)	4.41 A	20 / 22	290 x 870 x 204	
	KIT-XE9-JKE	2.50 (0.80-3.00)	4.59 A	3.40 (0.80-5.00)	4.59 A	20 / 24	290 x 870 x 204	
	KIT-XE12-JKE	3.50 (0.80-4.00)	3.87 A	4.40 (0.80-6.70)	4.04 A	20 / 30	290 x 870 x 204	
	KIT-XE15-JKE	4.20 (0.90-5.00)	3.44 A	5.40 (0.90-7.10)	3.70 A	29 / 32	290 x 870 x 204	
	KIT-XE18-JKE	5.00 (0.90-6.00)	3.40 A	5.80 (0.90-8.00)	3.77 A	34 / 34	290 x 1,070 x 235	
	KIT-XE21-JKE	6.30 (0.90-7.10)	2.85 C	7.20 (0.90-8.50)	3.43 B	34 / 34	290 x 1,070 x 235	
ETHEREA INVERTER DELUXE E	KIT-E7-JKE	2.05 (0.70-2.40)	4.36 A	2.80 (0.70-4.00)	4.41 A	20 / 22	290 x 870 x 204	
	KIT-E9-JKE	2.50 (0.80-3.00)	4.59 A	3.40 (0.80-5.00)	4.59 A	20 / 24	290 x 870 x 204	
	KIT-E12-JKE	3.50 (0.80-4.00)	3.87 A	4.40 (0.80-6.70)	4.04 A	20 / 30	290 x 870 x 204	
	KIT-E15-JKE	4.20 (0.90-5.00)	3.44 A	5.40 (0.90-7.10)	3.70 A	29 / 32	290 x 870 x 204	
	KIT-E18-JKE	5.00 (0.90-6.00)	3.40 A	5.80 (0.90-8.00)	3.77 A	34 / 34	290 x 1,070 x 235	
	KIT-E21-JKE	6.30 (0.90-7.10)	2.85 C	7.20 (0.90-8.50)	3.43 B	34 / 34	290 x 1,070 x 235	
	KIT-E24-JKE	6.80 (0.90-8.10)	3.21 A	8.60 (0.90-9.90)	3.23 C	35 / 35	290 x 1,070 x 235	
	KIT-E28-JKE	7.65 (0.90-8.60)	3.01 B	9.60 (0.90-11.00)	2.91 D	35 / 35	290 x 1,070 x 235	
RE INVERTER	KIT-RE9-JKE	2.50 (0.90-3.00)	3.57 A	3.30 (0.90-4.10)	4.02 A	22 / 27	290 x 848 x 204	
	KIT-RE12-JKE	3.50 (0.90-3.90)	3.47 A	4.25 (0.90-5.10)	3.79 A	22 / 33	290 x 848 x 204	
	KIT-RE15-JKE	4.20 (1.00-4.60)	3.33 A	5.30 (0.90-7.40)	3.44 B	29 / 34	290 x 848 x 204	
	KIT-RE18-JKE	5.00 (0.90-6.00)	3.40 A	5.80 (0.90-8.00)	3.77 A	37 / 37	290 x 1,070 x 235	
	KIT-RE24-JKE	6.80 (0.90-8.10)	3.21 A	8.60 (0.90-9.90)	3.23 C	38 / 38	290 x 1,070 x 235	
PW STANDARD	KIT-PW9-GKE	2.65	3.21 A	2.85	3.63 A	31 / 31	250 x 770 x 205	
	KIT-PW12-GKE	3.40	3.22 A	3.80	3.61 A	32 / 31	280 x 799 x 183	
	KIT-PW18-GKE	5.10	2.91 C	5.30	3.35 C	38 / 38	275 x 998 x 230	
	KIT-PW24-JKE	7.03	2.53 E	7.50	2.87 D	41 / 41	275 x 998 x 230	
V COOLING ONLY	KIT-V7-DKE	2.40	3.24 A	-	-	24	280 x 799 x 183	
	KIT-V9-DKE	3.00	3.21 A	-	-	24	280 x 799 x 183	
	KIT-V12-DKE	3.68	3.23 A	-	-	27	280 x 799 x 183	
	KIT-V18-DKE	5.30	3.25 A	-	-	35	275 x 998 x 230	
	KIT-V24-DKE	7.03	2.70 D	-	-	38	275 x 998 x 230	
	KIT-V28-EKE	7.91	3.22 A	-	-	42	340 x 1,150 x 260	
FLOOR CONSOLE INVERTER DELUXE	KIT-E9-GFE	2.50 (0.80-3.00)	4.39 A	3.60 (0.80-5.00)	4.16 A	23 / 23	600 x 700 x 210	
	KIT-E12-GFE	3.50 (0.80-3.80)	3.63 A	4.80 (0.80-6.10)	3.64 A	24 / 23	600 x 700 x 210	
	KIT-E18-GFE	5.00 (0.90-5.60)	3.23 A	5.80 (0.90-7.10)	3.63 B	32 / 23	600 x 700 x 210	
FLOOR CEILING INVERTER	KIT-E15-DTE	4.15 (0.90-4.55)	3.22 A	5.17 (0.90-6.30)	3.34 C	34 / 30	540 x 1,028 x 200	
	KIT-E18-DTE	5.00 (0.90-5.40)	3.01 B	6.10 (0.90-7.60)	3.35 C	36 / 32	540 x 1,028 x 200	
	KIT-E21-DTE	5.80 (0.90-6.60)	3.01 B	6.80 (0.90-8.10)	3.42 B	38 / 38	540 x 1,028 x 200	
MULTI 2x1	KIT-2E77-HKE-1	4.50 (1.50-5.00)	3.66 A	5.40 (1.10-7.00)	4.62 A	20 / 22	280 x 799 x 183 (x2)	x2
	KIT-2E712-HKE-1	4.50 (1.50-5.20)	3.66 A	5.40 (1.10-7.00)	4.62 A	20 / 22	280 x 799 x 183 (x2)	x1 x1
	KIT-2E912-HKE	5.00 (1.50-5.30)	3.36 A	5.60 (1.10-7.20)	4.55 A	20 / 22	280 x 799 x 183 (x2)	x1 x1
	KIT-2E1212-HKE	5.20 (1.50-5.40)	3.42 A	5.60 (1.10-7.20)	4.63 A	20 / 30	280 x 799 x 183 (x2)	x2
ETHEREA MULTI 2x1	KIT-2XE / E 77-JKE	4.50 (1.50-5.00)	3.66 A	5.40 (1.10-7.00)	4.62 A	20 / 22	290 x 870 x 204 (x2)	x2
	KIT-2XE / E79-JKE	4.50 (1.50-5.20)	3.66 A	5.40 (1.10-7.00)	4.62 A	20 / 22	290 x 870 x 204 (x2)	x1 x1
	KIT-2XE / E712-JKE	4.50 (1.50-5.20)	3.66 A	5.40 (1.10-7.00)	4.62 A	20 / 22	290 x 870 x 204 (x2)	x1 x1
	KIT-2XE / E99-JKE	4.80 (1.50-5.20)	3.66 A	5.60 (1.10-7.20)	4.48 A	20 / 24	290 x 870 x 204 (x2)	x2
	KIT-2XE / E912-JKE	5.00 (1.50-5.30)	3.36 A	5.60 (1.10-7.20)	4.55 A	20 / 24	290 x 870 x 204 (x2)	x1 x1
	KIT-2XE / E1212-JKE	5.20 (1.50-5.40)	3.42 A	5.60 (1.10-7.20)	4.63 A	20 / 30	290 x 870 x 204 (x2)	x2
3x1	KIT-3XE / E7712-JBE	5.20 (1.90-7.20)	3.23 A	6.80 (1.40-8.30)	4.56 A	20 / 30	290 x 870 x 204 (x3)	x2 x1
	KIT-3XE / E7715-JBE	6.80 (2.60-8.20)	3.45 A	8.60 (3.20-8.80)	4.43 A	20 / 32	290 x 870 x 204 (x3)	x2 x1
	KIT-3XE / E7712-JKE	6.80 (2.50-8.10)	3.42 A	8.60 (3.20-9.00)	4.39 A	20 / 30	290 x 870 x 204 (x3)	x2 x1
	KIT-3XE / E7715-JKE	6.80 (2.60-8.20)	3.45 A	8.60 (3.20-8.80)	4.43 A	20 / 32	290 x 870 x 204 (x3)	x2 x1
4x1	KIT-4XE / E77712-JBE	6.80 (2.50-8.80)	4.39 A	8.60 (3.00-10.60)	4.65 A	20 / 30	290 x 870 x 204 (x4)	x3 x1
	KIT-4XE / E77715 -JBE	6.80 (2.50-8.80)	4.39 A	8.60 (3.00-10.60)	4.65 A	20 / 32	290 x 870 x 204 (x4)	x3 x1
	KIT-4XE / E77712-JKE	8.00 (2.80-8.90)	3.76 A	9.40 (3.40-10.50)	4.43 A	20 / 30	290 x 870 x 204 (x4)	x3 x1
	KIT-4XE / E77712-JKE	8.00 (2.80-8.90)	3.76 A	9.40 (3.40-10.50)	4.50 A	20 / 32	290 x 870 x 204 (x4)	x3 x1
						FOR STANDARD ROOMS BETWEEN M²*		10 20 30 40

SUITABLE MIN MAX

* Standard conditions: 2.5m² High roof; 1 person per 10m²; 70w lighting per 10m²; 1.5m² window per 10m² oriented east or west; good thermal insulation on the walls.

FEATURE EXPLANATIONS

Healthy Air Quality

ADVANCED+PLUS E-ION AIR PURIFYING SYSTEM
E-ions are shot out to catch dust and inactivate airborne bacteria and mould. The positively charged e-ion filter attracts dust to thoroughly clean the room.

NEWLY DESIGNED PATROL SENSOR
The patrol sensor monitors microscopic dirt in the air and air purifying starts as soon as it is detected. It continues operating 24-hr a day even when the air conditioner is switched OFF to maintain room air quality.

MILD DRY COOLING
Fine control helps prevent a rapid decrease in room humidity while maintaining the set temperature. Maintains an RH* up to 10% higher than cooling operation (*RH : Relative Humidity).
Ideal when sleeping with the air conditioner on.

ION BENEFIT
Negative ions, found in the air near waterfalls and forests, generally produce a great sense of wellbeing. Panasonic brings all the benefits to your home, at the push of a button.

SUPER ALLERU-BUSTER FILTER
The super alleru-buster filter eliminates the allergens it captures. It combines three functions in one (anti-allergen, anti-virus and anti-bacteria) to keep room air clean and healthy.
ANTI-ALLERGEN PROTECTION
Inactivates more than 99% of filter-captured allergens.
ANTI-VIRUS PROTECTION
Inactivates more than 99% of filter-captured viruses.
ANTI-BACTERIA/ANTI-MOULD PROTECTION
The filter inactivates more than 99% of captured bacteria and mould spores.

ONE-TOUCH ANTI-MOULD AIR FILTER

ODOUR-REMOVING FUNCTION
Allows the exchanger to be cleaned, preventing possible odours. While this function is connected, the fan also remains off momentarily to avoid unpleasant odours while the exchanger is being cleaned.

REMOVABLE, WASHABLE PANEL
The front panel is easy to keep clean. It can be removed quickly in one single step and can be washed in water. A clean front panel ensures smoother, more efficient operation, which can save energy.

Comfort

INVERTER PLUS SYSTEM
Inverter plus products improve on the characteristics of standard Inverter air conditioners by over 20%. This means 20% less consumption and 20% off your electric bill.
A Inverter plus is also A class on cooling and heating mode.

INVERTER SYSTEM
The Inverter range provides greater efficiency, more comfort and less noise than classic inverter units.
The Inverter system provides more precise temperature control, without highs and lows, and keeps the ambient temperature constant with lower energy consumption and a significant reduction in noise and vibration levels.

SUPER QUIET MODE
Thanks to its latest generation compressor and its twin blade fan, our outdoor unit is one of the most silent on the market. The indoor unit emits an almost imperceptible 20 dB.

DOWN TO -15ºC IN COOLING ONLY MODE
The air conditioner works in cooling only mode with an outdoor temperature of -15ºC.

DOWN TO -15ºC IN HEAT PUMP
The air conditioner works in heat pump mode with an outdoor temperature as low as -15ºC.

POWERFUL MODE
High power for immediate air conditioning. The rapid and effective powerful mode is ideal for when you come home on the hottest or coldest days. It works at maximum power to reach the desired temperature in 15 minutes.

SOFT DRY OPERATION MODE
The soft dry mode eliminates excess moisture with a soft breeze and provides a sense of wellbeing without much change in temperature.

WIDE & LONG AIRFLOW VANE
This vane has been designed so that the air goes further. It sends air to every corner of the room to keep the whole room in the comfort zone.

PERSONAL AIRFLOW CREATION
Permits the air direction to be adjusted vertically and horizontally. This feature can be conveniently selected by remote control.

AUTOMATIC VERTICAL AIRFLOW CONTROL
The flap swings up and down automatically, making a vertical sweep which spreads the flow throughout the room. The flow can also be set a fixed angle with the remote control.

MANUAL HORIZONTAL AIRFLOW CONTROL

AUTO MODE (INVERTER)
Change automaticaly from cooling to heating in function of the temperature of the room.

HOT START MODE
On the start of heating cycle and after defrost cycle, the indoor fan will start up once the indoor heat exchanger is warm.

Use

12-HOUR ON&OFF DUAL SETTING TIMER

24-HOUR ON&OFF DUAL SETTING TIMER
This function enables you to set the start and stop times for the unit (hours and minutes) for daily periods.

LCD WIRELESS REMOTE CONTROLLER
Remote control with all function menus. Enables you to start, stop, programme and select functions or change the temperature without moving from your couch.

Reliability

AUTOMATIC RESTART
This function permits automatic restarting in safe mode operation has stopped for some unusual reason, such as after a power cut. As soon as the power is back, the unit restarts with the parameters selected before it stopped.

LONG PIPING
This is a figure which indicates the maximum length of pipe between the outdoor unit and the indoor unit(s). The long distances permitted are demonstration of the many installations possible.

TOP-PANEL MAINTENANCE ACCESS
Maintenance of an outdoor unit used to be quite a tedious task. Now, with the possibility of removing the top cover, maintenance is quick and easy.

SELF-DIAGNOSIS FUNCTION
With this function the unit carries out a process self-diagnosis when a particular function does not work correctly. This allows faster servicing.

FEATURE COMPARISON

	MODELS	KIT-XE7-JKE KIT-XE9-JKE KIT-XE12-JKE KIT-XE15-JKE	KIT-XE18-JKE KIT-XE21-JKE	KIT-E7-JKE KIT-E9-JKE KIT-E12-JKE KIT-E15-JKE	KIT-E18-JKE KIT-E21-JKE KIT-E24-JKE KIT-E28-JKE	KIT-RE9-JKE KIT-RE12-JKE KIT-RE15-JKE KIT-RE18-JKE KIT-RE24-JKE	KIT-XE/E7-JKE-3 KIT-XE/E9-JKE-3 KIT-XE/E12-JKE-3 KIT-XE/E15-JKE-3	KIT-E9-HKEA KIT-E12-HKEA KIT-E15-HKEA KIT-E18-HKEA KIT-E21-HKEA	KIT-PW9-GKE KIT-PW12-GKE KIT-PW18-GKE KIT-PW24-GKE	KIT-V7-DKE KIT-V9-DKE KIT-V12-DKE KIT-V18-DKE KIT-V24-DKE KIT-V28-EKE	KIT-E9-GFE-1 KIT-E12-GFE-1 KIT-E18-GFE-1	KIT-E15-DTE KIT-E18-DTE KIT-E21-DTE	KIT-2E77-HKE-1 KIT-2E712-HKE-1 KIT-2E912-HKE KIT-2E1212-HKE	KIT-2XE77-JKE KIT-2XE79-JKE KIT-2XE712-JKE KIT-2XE99-JKE KIT-2XE912-JKE KIT-2XE1212-JKE	KIT-3XE7712-JKE KIT-3XE7715-JKE	KIT-4XE7712-JBE KIT-4XE7715-JBE KIT-4XE7712-JKE KIT-4XE7715-JKE
HEALTHY AIR QUALITY	Advanced+Plus e-ion. Air purifying system	✘	✘	✘	✘		✘							✘	✘	✘
HEALTHY AIR QUALITY	Newly Designed Patrol Sensor	✘	✘	✘	✘		✘						✘	✘	✘	✘
HEALTHY AIR QUALITY	Mild Dry Cooling	✘	✘	✘	✘		✘									
HEALTHY AIR QUALITY	Ion Benefit							✘		✘			✘			
HEALTHY AIR QUALITY	Super Alleru-buster filter					✘ 10 years		✘	✘ Optional	✘		✘ Optional				
HEALTHY AIR QUALITY	One-Touch anti-mould air filter					✘				✘	✘	✘	✘			
HEALTHY AIR QUALITY	Odour-removing function	✘	✘	✘	✘	✘	✘	✘	✘	✘	✘	✘	✘	✘	✘	✘
HEALTHY AIR QUALITY	Removable, washable panel	✘	✘	✘	✘	✘	✘	✘	✘	✘	✘		✘	✘	✘	✘
COMFORT	Inverter + system	✘	✘	✘	✘		✘	✘			✘		✘	✘	✘	✘
COMFORT	Inverter system					✘						✘				
COMFORT	Super Quiet mode	✘	✘	✘	✘	✘ For RE9, RE12 and RE15	✘	✘		✘	✘	✘	✘	✘	✘	✘
COMFORT	Down to -15ºC in cooling only							✘								
COMFORT	Down to -15ºC in heat pump						✘	✘					✘			
COMFORT	Powerful mode	✘	✘	✘	✘	✘ For RE9, RE12 and RE15	✘	✘		✘	✘	✘	✘	✘	✘	✘
COMFORT	Soft dry operation mode	✘	✘	✘	✘	✘	✘	✘	✘	✘	✘	✘	✘	✘	✘	✘
COMFORT	Wide & long airflow vane	✘	✘	✘			✘						✘	✘	✘	✘
COMFORT	Personal airflow creation		✘		✘	✘ For RE18 and RE24		✘		✘ For V18 and V24						
COMFORT	Automatic vertical airflow control	✘		✘		✘ For RE9, RE12 and RE15	✘		✘	✘ For V7, V9 and V12	✘	✘	✘	✘	✘	✘
COMFORT	Manual horizontal airflow control	✘		✘		✘ For RE9, RE12 and RE15	✘				✘	✘	✘	✘	✘	✘
COMFORT	AUTO mode (Inverter)	✘	✘	✘	✘	✘	✘	✘			✘	✘	✘	✘	✘	✘
COMFORT	Hot start mode							✘	✘		✘	✘	✘			
USE	12-Hour ON&OFF dual setting timer					✘ For RE9, RE12 and RE15			✘ For PW9 and PW12							
USE	24-Hour ON&OFF dual setting timer	✘	✘	✘	✘	✘ For RE18 and RE24	✘	✘	✘ For PW18 and PW24	✘	✘	✘	✘	✘	✘	✘
USE	LCD Wireless remote controller	✘	✘	✘	✘	✘	✘	✘	✘	✘	✘	✘	✘	✘	✘	✘
RELIABILITY	Automatic restart	✘	✘	✘	✘	✘	✘	✘	✘	✘	✘	✘	✘	✘	✘	✘
RELIABILITY	Long piping	✘ 15m	✘ 20m	✘ 15m	✘ 20m 30 m (E24 and E28)	✘ 15m 20m (RE18) 30m (RE24)	✘ 15m	✘ 15m 20m (E18 and E21)	✘ 10m (PW9) 15m (PW12) 25m (PW18 and PW24)	✘ 10m (V7, V9) 15m (V12) 25m (V18 and V24)	✘ 15m 20m (E12 and E18)	✘ 20m	See page 55	See page 55	See page 55	See page 55
RELIABILITY	Top-Panel maintenance access	✘	✘	✘	✘	✘	✘	✘	✘	✘	✘	✘	✘	✘	✘	✘
RELIABILITY	Self-diagnosis function	✘	✘	✘	✘	✘	✘	✘			✘	✘	✘	✘	✘	✘

WALL MOUNTED // INVERTER +

A NEW CONCEPT IN AIR CONDITIONERS: AIR PURIFYING SYSTEM, STYLISH DESIGN AND HIGH EFFICIENCY. TILL -15°C ON HEAT PUMP MODE

Cool and stylish, the distinctive, beautiful rounded form is designed to complement today's modern interiors.
Etherea has an advanced air purifying system with the new Patrol Sensor to detect and eliminate contaminants.
Etherea is also able to prevent rapid decreases in room humidity with the new mild dry cooling system which increases comfort, especially when sleeping with the air conditioning running.
Furthermore, Etherea is more efficient than ever with 50% less consumption for the non-inverter model. More efficiency for bigger savings!

Maintains an Relative Humidity up to 10% higher than cooling operation. Ideal when sleeping with the air conditioner on

FOR XE7, E7, XE9, E9, XE12 AND E12

WALL MOUNTED // INVERTER +

Silver Kit			KIT-XE7-JKE-3	KIT-XE9-JKE-3	KIT-XE12-JKE-3	KIT-XE15-JKE-3
Indoor			CS-XE7JKEW	CS-XE9JKEW	CS-XE12JKEW	CS-XE15JKEW
Outdoor			CU-E7JKE-3	CU-E9JKE-3	CU-E12JKE-3	CU-E15JKE-3
White Kit			KIT-E7-JKE-3	KIT-E9-JKE-3	KIT-E12-JKE-3	KIT-E15-JKE-3
Indoor			CS-E7JKEW-3	CS-E9JKEW-3	CS-E12JKEW-3	CS-E15JKE-3
Outdoor			CU-E7JKE-3	CU-E9JKE-3	CU-E12JKE-3	CU-E15JKE-3
Cooling capacity	Nominal (Min - Max)	kW	2.05 (0.70 - 2.40)	2.50 (0.80 - 3.00)	3.50 (0.80 - 4.00)	4.20 (0.90 - 5.00)
		kCal/h	1,760 (600 - 2,060)	2,150 (690 - 2,580)	3,010 (690 - 3,440)	3,610 (770 - 4,300)
EER [1]	Nominal (Min - Max)	Energy Saving Classification	4.36 (4.12 - 4.14) A	4.59 (4.57 - 4.05) A	3.87 (4.32 - 3.39) A	3.44 (4.19 - 3.13) A
Power input Cooling	Nominal (Min - Max)	kW	0.47 (0.17 - 0.58)	0.545 (0.175 - 0.750)	0.905 (0.185 - 1.180)	1.22 (0.215 - 1.600)
Heating capacity	Nominal (Min - Max)	kW	2.80 (0.70 - 4.00)	3.40 (0.80 - 5.00)	4.40 (0.80 - 6.70)	5.40 (0.90 - 7.10)
		kCal/h	2,410 (600 - 3,440)	2,920 (690 - 4,300)	3,780 (690 - 5,760)	4,640 (770 - 6,110)
COP [1]	Nominal (Min - Max)	Energy Saving Classification	4.41 (4.38 - 3.92) A	4.59 (4.85 - 3.82) A	4.04 (4.57 - 3.47) A	3.70 (3.67 - 3.21) A
Power input Heating	Nominal (Min - Max)	kW	0.635 (0.16 - 1.02)	0.740 (0.165 - 1.31)	1.09 (0.175 - 1.93)	1.46 (0.245 - 2.210)
Annual Energy Consumption [2]		kWh	235	272	452	610
Indoor unit						
Air Volume	Cooling / Heating	m^3/h	654 / 684	678 / 714	750 / 768	750 / 804
Moisture removal volume		l/h	1.3	1.5	2.0	2.4
Sound pressure level [3]	Cooling (Hi / Lo / S-Lo)	dB(A)	37 / 24 / 20	39 / 25 / 20	42 / 28 / 20	43 / 32 / 29
	Heating (Hi / Lo / S-Lo)	dB(A)	38 / 25 / 22	40 / 27 / 24	42 / 33 / 30	43 / 35 / 32
Sound power level	Cooling (Hi)	dB	53	55	58	59
	Heating (Hi)	dB	54	56	58	59
Dimensions	H x W x D	mm	290 x 870 x 204	290 x 870 x 204	290 x 870 x 204	290 x 870 x 204
Net weight		kg	9	9	9	9
Air purifier filter			Patrol + E-ion	Patrol + E-ion	Patrol + E-ion	Patrol + E-ion
Outdoor unit						
Power source		V	230	230	230	230
Connection		mm^2	4 x 1.5	4 x 1.5	4 x 1.5	4 x 1.5
Current Cooling	Nominal	A	2.2	2.6	4.1	5.8
Current Heating	Nominal	A	3.0	3.4	5.1	6.9
Air Volume	Cooling / Heating	m^3/h	1,728 / 1,728	1,788 / 1,788	1,860 / 1,660	2,910 / 2,808
Sound pressure level [3]	Cooling (Hi)	dB(A)	45	46	48	46
	Heating (Hi)	dB(A)	46	47	50	46
Sound power level	Cooling (Hi)	dB	60	61	63	61
	Heating (Hi)	dB	61	62	65	61
Dimensions [4]	H x W x D	mm	540 x 780 x 289	540 x 780 x 289	540 x 780 x 289	750 x 875 x 345
Net weight		kg	33	34	34	48
Piping connections	Liquid pipe	inch (mm)	1/4" (6.35)	1/4" (6.35)	1/4" (6.35)	1/4" (6.35)
	Gas pipe	inch (mm)	3/8" (9.52)	3/8" (9.52)	3/8" (9.52)	1/2" (12.70)
Refrigerant Loading	R410A	kg	0.78	0.96	0.98	1.06
Elevation difference (in/out) [5]	Max	m	15	15	15	15
Piping length	Min / Max	m	3 / 15	3 / 15	3 / 15	3 / 15
Piping length without refegirent increase	Max	m	7.5	7.5	7.5	7.5
Additional gas		g/m	20	20	20	20
Operating range, outdoor [3]	Cooling Min / Max	°c	+16 / +43	+16 / +43	+16 / +43	+16 / +43
	Heating Min / Max	°c	-15 / +24	-15 / +24	-15 / +24	-15 / +24

GLOBAL REMARKS	Rating conditions	Cooling	Heating
	Inside air temperature	27°C DB / 19°C WB	20°C DB
	Outside air temperature	35°C DB / 24°C WB	7°C DB / 6°C WB

DB : Dry buld; WB : Wet buld
These indoor/outdoor units are not suitable for Nordic countries No warranty can be applied if installed in Nordic countries

1) EER and COP classification is at 230V in accordance with EU directive 2002/31/EC.
2) The annual consumption is calculated by multiplying the input power at 230V by an avarage of 500 hours per year in cooling mode.
3) The Sound pressure level of the units shows the value measured of a position 1 meter in front of the main body and 0,8 meters below the unit. The sound pressure is measured in accordance with Eurovent 6/C/006-97 specification.
4) Add 70mm for piping port.
5) When installing the outdoor unit at a higher position than the indoor unit.

NEW09

CS-XE7JKEW // CS-XE9JKEW // CS-XE12JKEW // CS-XE15JKEW

TECHNICAL FOCUS

- VERY EXCLUSIVE WHITE DESIGN
- NEW GENERATION OF E-ION AIR PURIFYING SYSTEM WITH 24-HR PATROL SENSOR
- MILD DRY COOLING: PREVENT A RAPID DECREASE IN ROOM HUMIDITY
- MORE EFFICIENT THAN EVER FOR LESS CONSUMPTION AND HIGHER SAVINGS
- SUPER QUIET! ONLY 20DB, EQUIVALENT TO NIGHTTIME IN THE COUNTRY (FOR E7, E9 AND E12)
- MORE POWERFUL AIRFLOW TO QUICKLY REACH THE DESIRED TEMPERATURE

CS-E7JKEW-3 // CS-E9JKEW-3 // CS-E12JKEW-3 // CS-E15JKE-3

KIT-XE7-JKE-3 // KIT-XE9-JKE-3 // KIT-XE12-JKE-3 // KIT-XE15-JKE-3 // KIT-E7-JKE-3 // KIT-E9-JKE-3 // KIT-E12-JKE-3 // KIT-E15-JKE-3

HEALTHY AIR

- E-ion plus air purifying system
- Patrol sensor to detect and eliminate contaminants
- Air conditioner and purifier with simultaneous or independent operation
- Mild Dry Cooling operation mode for increased comfort and prevention of skin moisture loss

ENERGY EFFICIENCY AND ECOLOGY

- Maximum efficiency inverter system, for bigger savings
- R410A refrigerant gas

COMFORT

- Super Quiet mode (from 20dB)
- Powerful mode
- Uniform dispersion of airflow
- Automatic vertical airflow control
- Hot start mode, increased comfort on heat pump mode, no cool airflow when process starts
- Automatic restart after power cut

EASE OF USE

- 24-hr timer
- User friendly infrared remote control

EASY INSTALLATION AND MAINTENANCE

- Removable, washable panel
- 15 m maximum connection distance
- 15 m maximum elevation difference
- Maintenance access through the top panel of the outdoor unit
- Self-diagnosis function

CU-E7JKE-3
CU-E9JKE-3
CU-E12JKE-3

CU-E15JKE-3

WALL MOUNTED ETHEREA // INVERTER + // SILVER

ETHEREA, A NEW CONCEPT IN AIR CONDITIONERS: AIR PURIFYING SYSTEM, STYLISH DESIGN AND HIGH EFFICIENCY

Cool and stylish, the distinctive, beautiful rounded form is designed to complement today's modern interiors.
Etherea has an advanced air purifying system with the new Patrol Sensor to detect and eliminate contaminants.
Etherea is also able to prevent rapid decreases in room humidity with the new mild dry cooling system which increases comfort, especially when sleeping with the air conditioning running.
Furthermore, Etherea is more efficient than ever with 50% less consumption for the non-inverter model. More efficiency for bigger savings!

Maintains an Relative Humidity up to 10% higher than cooling operation. Ideal when sleeping with the air conditioner on

WALL MOUNTED ETHEREA // INVERTER + // SILVER

Kit			KIT-XE15-JKE	KIT-XE18-JKE	KIT-XE21-JKE
Indoor			**CS-XE15JKEW**	**CS-XE18JKEW**	**CS-XE21JKEW**
Outdoor			**CU-E15JKE**	**CU-E18JKE**	**CU-E21JKE**
Cooling capacity	Nominal (Min - Max)	kW	4.20 (0.90 - 5.00)	5.00 (0.90 - 6.00)	6.30 (0.90 - 7.10)
		kCal/h	3,610 (770 - 4,300)	4,300 (770 - 5,160)	5,420 (770 - 6,110)
EER [1]	Nominal (Min - Max)	Energy Saving Classification	3.44 (4.19 - 3.13) A	3.40 (4.19 - 2.96) A	2.85 (4.19 - 2.8) C
Power input Cooling	Nominal (Min - Max)	kW	1.220 (0.215 - 1.600)	1.470 (0.215 - 2.030)	2.210 (0.215 - 2.540)
Heating capacity	Nominal (Min - Max)	kW	5.40 (0.90 - 7.10)	5.80 (0.90 - 8.00)	7.20 (0.90 - 8.50)
		kCal/h	4,640 (770 - 6,110)	4990 (770 - 6,880)	6,190 (770 - 7,310)
COP [1]	Nominal (Min - Max)	Energy Saving Classification	3.70 (3.67 - 3.21) A	3.77 (3.67 - 3.08) A	3.43 (3.67 - 3.09) B
Power input Heating	Nominal (Min - Max)	kW	1.46 (0.245 - 2.210)	1.54 (0.245 - 2.600)	2.10 (0.245 - 2.750)
Annual Energy Consumption [2]		kWh	610	735	1,105
Indoor unit					
Air Volume	Cooling / Heating	m^3/h	750 / 804	978 / 1,074	1,038 / 1,110
Moisture removal volume		l/h	2.4	2.8	3.5
Sound pressure level [3]	Cooling (Hi / Lo / S-Lo)	dB(A)	43 / 32 / 29	44 / 37 / 34	45 / 37 / 34
	Heating (Hi / Lo / S-Lo)	dB(A)	43 / 35 / 32	44 / 37 / 34	45 / 37/ 34
Sound power level	Cooling (Hi)	dB	59	60	61
	Heating (Hi)	dB	59	60	61
Dimensions	H x W x D	mm	290 x 870 x 204	290 x 1,070 x 235	290 x 1,070 x 235
Net weight		kg	9	12	12
Air purifier filter			Patrol + E-ion	Patrol + E-ion	Patrol + E-ion
Outdoor unit					
Power source		V	230	230	230
Connection		mm^2	4 x 1.5	4 x 2.5	4 x 2.5
Current Cooling	Nominal	A	5.8	6.7	9.8
Current Heating	Nominal	A	6.9	7.0	9.3
Air Volume	Cooling / Heating	m^3/h	2,910 / 2,808	2,400 / 2,316	2,568 / 2,490
Sound pressure level [3]	Cooling (Hi)	dB(A)	46	47	48
	Heating (Hi)	dB(A)	46	47	49
Sound power level	Cooling (Hi)	dB	61	61	62
	Heating (Hi)	dB	61	61	63
Dimensions [4]	H x W x D	mm	750 x 875 x 345	750 x 875 x 345	750 x 875 x 345
Net weight		kg	48	48	49
Piping connections	Liquid pipe	inch (mm)	1/4" (6.35)	1/4" (6.35)	1/4" (6.35)
	Gas pipe	inch (mm)	1/2" (12.70)	1/2" (12.70)	1/2" (12.70)
Refrigerant Loading	R410A	kg	1.06	1.15	1.29
Elevation difference (in/out) [5]	Max	m	15	15	15
Piping length	Min / Max	m	3 / 15	3 / 20	3 / 20
Piping length without refegirent increase	Max	m	7.5	10	10
Additional gas		g/m	20	20	20
Operating range, outdoor [3]	Cooling Min / Max	°c	+16 / +43	+16 / +43	+16 / +43
	Heating Min / Max	°c	-5 / +24	-5 / +24	-5 / +24

GLOBAL REMARKS

Rating conditions	Cooling	Heating
Inside air temperature	27°C DB / 19°C WB	20°C DB
Outside air temperature	35°C DB / 24°C WB	7°C DB / 6°C WB

DB : Dry buld; WB : Wet buld
These indoor/outdoor units are not suitable for Nordic countries No warranty can be applied if installed in Nordic countries

1) EER and COP classification is at 230V in accordance with EU directive 2002/31/EC.
2) The annual consumption is calculated by multiplying the input power at 230V by an avarage of 500 hours per year in cooling mode.
3) The Sound pressure level of the units shows the value measured of a position 1 meter in front of the main body and 0,8 meters below the unit. The sound pressure is measured in accordance with Eurovent 6/C/006-97 specification.
4) Add 70mm for piping port.
5) When installing the outdoor unit at a higher position than the indoor unit.

ETHEREA

NEW09

CS-XE18JKEW // CS-XE21JKEW

TECHNICAL FOCUS

- VERY EXCLUSIVE SILVER DESIGN
- NEW GENERATION OF E-ION AIR PURIFYING SYSTEM WITH 24-HR PATROL SENSOR
- MILD DRY COOLING: PREVENT A RAPID DECREASE IN ROOM HUMIDITY
- MORE EFFICIENT THAN EVER FOR LESS CONSUMPTION AND HIGHER SAVINGS
- MORE POWERFUL AIRFLOW TO QUICKLY REACH THE DESIRED TEMPERATURE

CS-XE15JKEW

CS-XE18JKEW // CS-XE21JKEW

KIT-XE15-JKE // KIT-XE18-JKE // KIT-XE21-JKE

HEALTHY AIR
- E-ion plus air purifying system
- Patrol sensor to detect and eliminate contaminants
- Air conditioner and purifier with simultaneous or independent operation
- Mild Dry Cooling operation mode for increased comfort and prevention of skin moisture loss

ENERGY EFFICIENCY AND ECOLOGY
- Maximum efficiency inverter system, for bigger savings
- R410A refrigerant gas

COMFORT
- Super Quiet mode
- Powerful mode
- Uniform dispersion of airflow
- Automatic vertical airflow control
- Hot start mode, increased comfort on heat pump mode, no cool airflow when process starts
- Automatic restart after power cut

EASE OF USE
- 24-hr timer
- User friendly infrared remote control

EASY INSTALLATION AND MAINTENANCE
- Removable, washable panel
- 15 m maximum connection distance (20 m for XE18 and XE21)
- 15 m maximum elevation difference
- Maintenance access through the top panel of the outdoor unit
- Self-diagnosis function

CU-E15JKE CU-E21JKE
CU-E18JKE

WALL MOUNTED ETHEREA // INVERTER + // WHITE

ETHEREA, A NEW CONCEPT IN AIR CONDITIONERS: AIR PURIFYING SYSTEM, STYLISH DESIGN AND HIGH EFFICIENCY

Cool and stylish, the distinctive, beautiful rounded form is designed to complement today's modern interiors.
Etherea has an advanced air purifying system with the new Patrol Sensor to detect and eliminate contaminants.
Etherea is also able to prevent rapid decreases in room humidity with the new mild dry cooling system which increases comfort, especially when sleeping with the air conditioning running.
Furthermore, Etherea is more efficient than ever with 50% less consumption for the non-inverter model. More efficiency for bigger savings!

Maintains an Relative Humidity up to 10% higher than cooling operation. Ideal when sleeping with the air conditioner on

WALL MOUNTED ETHEREA // INVERTER + // WHITE

Kit			KIT-E18-JKE	KIT-E21-JKE	KIT-E24-JKE	KIT-E28-JKE
Indoor			CS-E18JKEW	CS-E21JKEW	CS-E24JKES	CS-E28JKES
Outdoor			CU-E18JKE	CU-E21JKE	CU-E24JKE	CU-E28JKE
Cooling capacity	Nominal (Min - Max)	kW	5.00 (0.90 - 6.00)	6.30 (0.90 - 7.10)	6.80 (0.90 - 8.10)	7.65 (0.90 - 8.60)
		kCal/h	4,300 (770 - 5,160)	5,420 (770 - 6,110)	5,850 (770 - 6,970)	6580 (770 - 7,400)
EER [1]	Nominal (Min - Max)	Energy Saving Classification	3.40 (4.19 - 2.96) A	2.85 (4.19 - 2.80) C	3.21 (2.57 - 3.00) A	3.01 (2.57 - 2.92) B
Power input Cooling	Nominal (Min - Max)	kW	1.470 (0.215 - 2.030)	2.210 (0.215 - 2.540)	2.120 (0.350 - 2.700)	2.540 (0.350 - 2.950)
Heating capacity	Nominal (Min - Max)	kW	5.80 (0.90 - 8.00)	7.20 (0.90 - 8.50)	8.60 (0.90 - 9.90)	9.60 (0.90 - 11.00)
		kCal/h	4,990 (770 - 6,880)	6,190 (770 - 7,310)	7,400 (770 - 8,510)	8,260 (770 - 9,460)
COP [1]	Nominal (Min - Max)	Energy Saving Classification	3.77 (3.67 - 3.08) A	3.43 (3.67 - 3.09) B	3.23 (2.50 - 3.09) C	2.91 (2.50 - 2.93) D
Power input Heating	Nominal (Min - Max)	kW	1.540 (0.245 - 2.600)	2.100 (0.245 - 2.750)	2.660 (0.360 - 3.200)	3.300 (0.360 - 3.750)
Annual Energy Consumption [2]		kWh	735	1105	1060	1270
Indoor unit						
Air Volume	Cooling / Heating	m^3/h	978 / 1,074	1,038 / 1,110	1,104 / 1,170	1,158 / 1,206
Moisture removal volume		l/h	2.8	3.5	3.9	4.5
Sound pressure level [3]	Cooling (Hi / Lo / S-Lo)	dB(A)	44 / 37 / 34	45 / 37 / 34	47 / 38 / 35	49 / 38 / 35
	Heating (Hi / Lo / S-Lo)	dB(A)	44 / 37 / 34	45 / 37/ 34	47 / 38 / 35	48 / 38 / 35
Sound power level	Cooling (Hi)	dB	60	61	63	65
	Heating (Hi)	dB	60	61	63	64
Dimensions. indoor	H x W x D	mm	290 x 1070 x 235	290 x 1,070 x 235	290 x 1,070 x 235	290 x 1,070 x 235
Net weight		kg	12	12	12	12
Air purifier filter			Patrol + E-ion plus	Patrol + E-ion plus	Patrol + E-ion plus	Patrol + E-ion plus
Outdoor unit						
Power source		V	230	230	230	230
Connection		mm^2	4 x 2.5	4 x 2.5	4 x 2.5	4 x 2.5
Current Cooling	Nominal	A	6.7	9.8	9.7	11.5
Current Heating	Nominal	A	7.0	9.3	12.1	15
Air Volume	Cooling / Heating	m^3/h	2,400 / 2,316	2,568 / 2,490	3,012 / 3,012	3,270 / 3,250
Sound pressure level [3]	Cooling (Hi)	dB(A)	47	48	52	53
	Heating (Hi)	dB(A)	47	49	52	53
Sound power level	Cooling (Hi)	dB	61	62	66	67
	Heating (Hi)	dB	61	63	66	67
Dimensions [4]	H x W x D	mm	750 x 875 x 345	750 x 875 x 345	795 x 875 x 320	795 x 875 x 320
Net weight		kg	48	49	65	66
Piping connections	Liquid pipe	inch (mm)	1/4" (6.35)	1/4" (6.35)	1/4" (6.35)	1/4" (6.35)
	Gas pipe	inch (mm)	1/2" (12.70)	1/2" (12.70)	5/8" (15.88)	5/8" (15.88)
Refrigerant Loading	R410A	kg	1.15	1.29	1.70	1.80
Elevation difference (in/out) [5]	Max	m	15	15	20	20
Piping length	Min / Max	m	3 / 20	3 / 20	3 / 30	3 / 30
Piping length without refegirent increase	Max	m	10	10	10	10
Additional gas		g/m	20	20	30	30
Operating range, outdoor [3]	Cooling Min / Max	°c	+16 / +43	+16 / +43	+16 / +43	+16 / +43
	Heating Min / Max	°c	-5 / +24	-5 / +24	-5 / +24	-5 / +24

GLOBAL REMARKS

Rating conditions	Cooling	Heating
Inside air temperature	27°C DB / 19°C WB	20°C DB
Outside air temperature	35°C DB / 24°C WB	7°C DB / 6°C WB

DB : Dry buld; WB : Wet buld
These indoor/outdoor units are not suitable for Nordic countries No warranty can be applied if installed in Nordic countries

1) EER and COP classification is at 230V in accordance with EU directive 2002/31/EC.
2) The annual consumption is calculated by multiplying the input power at 230V by an avarage of 500 hours per year in cooling mode.
3) The Sound pressure level of the units shows the value measured of a position 1 meter in front of the main body and 0,8 meters below the unit. The sound pressure is measured in accordance with Eurovent 6/C/006-97 specification.
4) Add 70mm for piping port.
5) When installing the outdoor unit at a higher position than the indoor unit.

ETHEREA

NEW09

TECHNICAL FOCUS

- VERY EXCLUSIVE WHITE DESIGN
- NEW GENERATION OF E-ION AIR PURIFYING SYSTEM WITH 24-HR PATROL SENSOR
- MILD DRY COOLING: PREVENT A RAPID DECREASE IN ROOM HUMIDITY
- MORE EFFICIENT THAN EVER FOR LESS CONSUMPTION AND HIGHER SAVINGS
- MORE POWERFUL AIRFLOW TO QUICKLY REACH THE DESIRED TEMPERATURE

KIT-E18-JKE // KIT-E21-JKE // KIT-E24-JKE // KIT-E28-JKE

HEALTHY AIR
- E-ion plus air purifying system
- Patrol sensor to detect and eliminate contaminants
- Air conditioner and purifier with simultaneous or independent operation
- Mild Dry Cooling operation mode for increased comfort and prevention of skin moisture loss

ENERGY EFFICIENCY AND ECOLOGY
- Maximum efficiency inverter system, for bigger savings
- R410A refrigerant gas

COMFORT
- Super Quiet mode
- Powerful mode
- Uniform dispersion of airflow
- Automatic vertical airflow control
- Hot start mode, increased comfort on heat pump mode, no cool airflow when process starts
- Automatic restart after power cut

EASE OF USE
- 24-hr timer
- User friendly infrared remote control

EASY INSTALLATION AND MAINTENANCE
- Removable, washable panel
- 20 m maximum connection distance (30 m for E24 and E28)
- 15 m maximum elevation difference (20 m for E24 and E28)
- Maintenance access through the top panel of the outdoor unit
- Self-diagnosis function

CU-E18JKE
CU-E21JKE

CU-E24JKE
CU-E28JKE

WALL MOUNTED RE TYPE // STANDARD INVERTER

RE : Inverter models are powerful and efficient and are always there when you need them & highly efficient. Furthermore, with the Alleru-buster anti allergic filter, you can always enjoy the best quality air, without viruses, moulds and bacteria.

FOR RE9 AND RE12

WALL MOUNTED RE TYPE // STANDARD INVERTER

Kit			KIT-RE9-JKE	KIT-RE12-JKE	KIT-RE15-JKE	KIT-RE18-JKE	KIT-RE24-JKE
Indoor			CS-RE9JKE	CS-RE12JKE	CS-RE15JKE	CS-RE18JKE	CS-RE24JKE
Outdoor			CU-RE9JKE	CU-RE12JKE	CU-RE15JKE	CU-RE18JKE	CU-RE24JKE
Cooling capacity	Nominal (Min - Max)	kW	2.50 (0.90 - 3.00)	3.50 (0.90 - 3.90)	4.20 (1.00 - 4.60)	5.00 (0.90 - 6.00)	6.80 (0.90 - 8.10)
		kCal/h	2,150 (770 - 2,580)	3,010 (770 - 3,350)	3,610 (860 - 3,960)	4,300 (770 - 5,160)	5,850 (770 - 6,970)
EER [1]	Nominal (Min - Max)	Energy Saving Classification	3.57 (4.74 - 3.00) A	3.47 (5.29 - 3.25) A	3.33 (4.76 - 2.87) A	3.40 (4.19 - 2.96) A	3.21 (2.57 - 3.00) A
Power input Cooling	Nominal (Min - Max)	kW	0.70 (0.19 - 1.00)	1.01 (0.17 - 1.2)	1.26 (0.21 - 1.60)	1.47 (0.215 - 2.03)	2.12 (0.35 - 2.70)
Heating capacity	Nominal (Min - Max)	kW	3.30 (0.90 - 4.10)	4.25 (0.90 - 5.10)	5.30 (0.90 - 7.40)	5.80 (0.90 - 8.00)	8.60 (0.90 - 9.90)
		kCal/h	2,840 (770 - 3,520)	3,660 (770 - 4,390)	45,60 (770 - 6,530)	4,990 (770 - 6,880)	7,400 (770 - 8,510)
COP [1]	Nominal (Min - Max)	Energy Saving Classification	4.02 (5.29 - 3.57) A	3.79 (6.00 - 3.49) A	3.44 (4.28 - 3.16) B	3.77 (3.67 - 3.08) A	3.23 (2.5 - 3.09) C
Power input Heating	Nominal (Min - Max)	kW	0.82 (0.17 - 1.15)	1.12 (0.15 - 1.46)	1.54 (0.21 - 2.40)	1.54 (0.245 - 2.60)	2.66 (0.36 - 3.20)
Annual Energy Consumption [2]		kWh	350	505	630	735	1,060
Indoor unit							
Power source		V	230	230	230	230	230
Connection		mm²	4 x 2.5	4 x 2.5	4 x 2.5	4 x 2.5	4 x 2.5
Current Cooling	Nominal	A	3.45	4.7	6.05	6.7	9.7
Current Heating	Nominal	A	3.70	5.2	7.10	7.0	12.1
Air Volume	Cooling / Heating	m³/h	828 / 828	828 / 870	864 / 918	978 / 1,074	1,014 / 1,098
Moisture removal volume		l/h	1.4	2.0	2.4	2.8	3.9
Sound pressure level [3]	Cooling (Hi / Lo / S-Lo)	dB(A)	42 / 27 / 22	42 / 30 / 22	46 / 31 / 29	44 / 37	47 / 38
	Heating (Hi / Lo / S-Lo)	dB(A)	42 / 27	42 / 33	47 / 34	44 / 37	47 / 38
Sound power level	Cooling (Hi)	dB	53	53	57	60	63
	Heating (Hi)	dB	53	53	58	60	63
Dimensions	H x W x D	mm	290 x 848 x 204	290 x 848 x 204	290 x 848 x 204	290 x 1,070 x 235	290 x 1,070 x 235
Net weight		kg	9	9	9	12	12
Air purifier filter			Alleru-buster filter	Alleru-buster filter	Alleru-buster filter	Alleru-buster filter	Alleru-buster filter
Outdoor unit							
Air Volume	Cooling / Heating	m³/h	1,734 / 1,734	1,830 / 1,830	1,680 / 1,920	2,400 / 2,316	3,012 / 3,012
Sound pressure level [3]	Cooling (Hi)	dB(A)	47	48	50	47	52
	Heating (Hi)	dB(A)	48	50	51	47	52
Sound power level	Cooling (Hi)	dB	60	61	63	61	66
	Heating (Hi)	dB	61	63	64	61	66
Dimensions [4]	H x W x D	mm	540 x 780 x 289	540 x 780 x 289	540 x 780 x 289	750 x 875 x 345	795 x 875 x 320
Net weight		kg	28	30	36	48	65
Piping connections	Liquid pipe	inch (mm)	1/4" (6.35)	1/4" (6.35)	1/4" (6.35)	1/4" (6.35)	1/4" (6.35)
	Gas pipe	inch (mm)	3/8" (9.52)	3/8" (9.52)	1/2" (12.70)	1/2" (12.70)	5/8" (15.88)
Refrigerant Loading	R410A	kg	0.84	1.040	1.040	1.15	1.70
Elevation difference (in/out) [5]	Max	m	5	5	5	15	20
Piping length	Min / Max	m	3 / 15	3 / 15	3 / 15	3 / 20	3 / 30
Piping length without refegirent increase	Max	m	7.5	7.5	7.5	10	10
Additional gas		g/m	20	20	20	20	30
Operating range, outdoor [3]	Cooling Min / Max	°c	+16 / +43	+16 / +43	+16 / +43	+16 / +43	+16 / +43
	Heating Min / Max	°c	-5 / +24	-5 / +24	-5 / +24	-5 / +24	-5 / +24

GLOBAL REMARKS

Rating conditions	Cooling	Heating
Inside air temperature	27°C DB / 19°C WB	20°C DB
Outside air temperature	35°C DB / 24°C WB	7°C DB / 6°C WB

DB : Dry buld; WB : Wet buld

These indoor/outdoor units are not suitable for Nordic countries No warranty can be applied if installed in Nordic countries

1) EER and COP classification is at 230V in accordance with EU directive 2002/31/EC.

2) The annual consumption is calculated by multiplying the input power at 230V by an avarage of 500 hours per year in cooling mode.

3) The Sound pressure level of the units shows the value measured of a position 1 meter in front of the main body and 0,8 meters below the unit. The sound pressure is measured in accordance with Eurovent 6/C/006-97 specification.

4) Add 70mm for piping port.

5) When installing the outdoor unit at a higher position than the indoor unit.

CS-RE9JKE // CS-RE12JKE // CS-RE15JKE

TECHNICAL FOCUS

- COMPLETE LINE-UP OF STANDARD INVERTER MODELS
- QUIETER INDOOR UNITS
- HIGH ENERGY SAVINGS
- REFRESHING AIRFLOW WITH RELAXING BREEZE EFFECT
- 12-HR REMOTE CONTROL TIMER
- LONG CONNECTION DISTANCE (FROM 15 M UP TO 30 M)

CS-RE18JKE // CS-RE24JKE

KIT-RE9-JKE // KIT-RE12-JKE // KIT-RE15-JKE // KIT-RE18-JKE // KIT-RE24-JKE

HEALTHY AIR
- New generation Alleru-buster anti allergic filter with 10-year warranty
- Odour-removing function
- Anti-mould filter

ENERGY, EFFICIENCY AND ECOLOGY
- Inverter system
- R410A refrigerant gas

COMFORT
- Refreshing airflow with relaxing breeze effect (only for RE9, RE12 and RE15)
- Super Quiet mode (only for RE9, RE12 and RE15)
- Powerful mode (only for RE9 and RE12 and RE15)
- Automatic vertical airflow control
- Hot start mode
- Automatic restart

EASE OF USE
- 12-hr timer (only for RE9, RE12 and RE15)
- 24-hr timer (only for RE18 and RE24)
- User friendly infrared remote control

EASY INSTALLATION AND MAINTENANCE
- 15 m maximum connection distance (20 m for RE18 and 30 m for RE24)
- Removable, washable panel
- Maintenance access through the top panel of the outdoor unit
- Self-diagnosis function

FOR RE9, RE12 AND RE15

FOR RE18 AND RE24

CU-RE9JKE CU-RE12JKE CU-RE15JKE

CU-RE18JKE

CU-RE24JKE

powerful
and efficient

WALL MOUNTED // INVERTER

UE INVERTER MODELS ARE POWERFUL AND EFFICIENT.

INVERTER SYSTEM
The Inverter range provides greater efficiency, more comfort and less noise than classic air conditioners. The Inverter system provides more precise temperature control, and keeps the ambient temperature constant with lower energy consumption and a significant reduction in noise and vibration levels.

SOFT DRY OPERATION MODE
The soft dry mode eliminates excess moisture with a soft breeze and provides a sense of wellbeing without much change in temperature.

SUPER QUIET MODE
Thanks to its latest generation compressor and its twin blade fan, our outdoor unit is one of the most silent on the market. The indoor unit emits an almost imperceptible 22 dB.

KIT-UE9-JKE // KIT-UE12-JKE

HEALTHY AIR
- Odour-removing function
- Anti-mould filter

ENERGY, EFFICIENCY AND ECOLOGY
- Inverter system
- R410A refrigerant gas

COMFORT
- Refreshing airflow with relaxing breeze effect
- Super Quiet mode
- Powerful mode
- Automatic vertical airflow control
- Hot start mode
- Automatic restart

EASE OF USE
- 12-hr timer
- User friendly infrared remote control

EASY INSTALLATION AND MAINTENANCE
- Maximum connection distance 15 m
- Removable, washable panel

TECHNICAL FOCUS

- QUIETER INDOOR UNITS
- HIGH ENERGY SAVINGS
- REFRESHING AIRFLOW WITH RELAXING BREEZE EFFECT
- 12-HR REMOTE CONTROL TIMER
- LONG CONNECTION DISTANCE

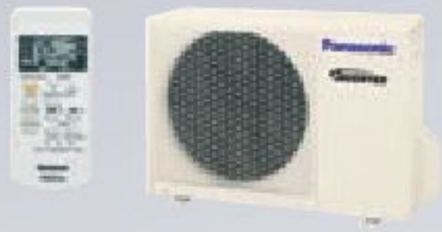

CU-UE9JKE
CU-UE12JKE

WALL MOUNTED // INVERTER

Kit			KIT-UE9-JKE	KIT-UE12-JKE
Indoor			CS-UE9JKE	CS-UE12JKE
Outdoor			CU-UE9JKE	CU-UE12JKE
Cooling capacity	Nominal (Min - Max)	kW	2.50 (0.90-3.00)	3.50 (0.90-3.90)
	Nominal (Min - Max)	kCal/h	2,150 (770-2,580)	3,010 (770-3,350)
EER [1]	Nominal (Min - Max)	Energy Saving Classification	3.33 (4.73-3.00) A	3.30 (5.29-3.25) A
Power input Cooling	Nominal (Min - Max)	kW	0.75 (0.19-1.00)	1.06 (0.17-1.2)
Heating capacity	Nominal (Min - Max)	kW	3.30 (0.90-4.00)	4.25 (0.90-4.70)
	Nominal (Min - Max)	kCal/h	2,840 (770-3,440)	3,660 (770-4,04)
COP [1]	Nominal (Min - Max)	Energy Saving Classification	3.66 (4.09-3.33) A	3.63 (6.00-3.56) A
Power input Heating	Nominal (Min - Max)	kW	0.90 (0.22-1.2)	1.17 (0.15-1.32)
Annual Energy Consuption [2]		kWh	375	530
Indoor unit				
Power source		V	230	230
Connection		mm^2	4 x 2.5	4 x 2.5
Current (Nominal)	Cooling / Heating	A	3.6 / 4.10	4.7 / 5.2
Air Volume	Cooling / Heating	m^3/h	648 / 684	702 / 744
Moisture removal volume		l/h	1.4	2.0
Sound pressure Level [3]	Cooling (Hi / Lo / S-Lo)	dB(A)	42 / 27 / 22	42 / 30 / 22
	Heating (Hi / Lo / S-Lo)	dB(A)	42 / 27 / 25	42 / 33 / 25
Sound power Level	Cooling / Heating (Hi)	dB	53 / 53	53 / 53
Dimensions	H x W x D	mm	250 x 770 x 205	280 x 799 x 183
Net weight		kg	7	8.5
Outdoor unit				
Air Volume	Cooling / Heating	m^3/h	1,734 / 1,734	1,830 / 1,830
Sound pressure Level [3]	Cooling / Heating (Hi)	dB(A)	46 / 47	48 / 50
Sound power Level	Cooling / Heating (Hi)	dB	59 / 60	61 / 63
Dimensions [4]	H x W x D	mm	540 x 780 x 289	540 x 780 x 289
Net weight		kg	28	30
Piping connections	Liquid / Gaz pipe	inch (mm)	1/4" (6.35) / 3/8" (9.52)	1/4" (6.35) / 3/8" (9.52)
Refrigerent Loading	R410A	kg	0.84	1.04
Elevation difference (in/out) [5]	Max	m	5	5
Piping lenght	Min / Max	m	3 / 15	3 / 15
Piping lenght without refegirent increase	Max	m	7.5	7.5
Additional gaz		g/m	20	20
Operating range [3]	Cooling Min / Max	°c	+16 / +43	+16 / +43
	Heating Min / Max	°c	-5 / +24	-5 / +24

GLOBAL REMARKS

Rating conditions	Cooling	Heating
Inside air temperature	27°C DB / 19°C WB	20°C DB
Outside air temperature	35°C DB / 24°C WB	7°C DB / 6°C WB

DB : Dry buld; WB : Wet buld
These indoor/outdoor units are not suitable for Nordic countries No warranty can be applied if installed in Nordic countries

1) EER and COP classification is at 230V in accordance with EU directive 2002/31/EC.
2) The annual consumption is calculated by multiplying the input power at 230V by an avarage of 500 hours per year in cooling mode.
3) The Sound pressure level of the units shows the value measured of a position 1 meter in front of the main body and 1,5 from the ground. The sound pressure is measured in accordance with Eurovent 6/C/006-97 specification.
4) Add 70mm for piping port.
5) When installing the outdoor unit at a higher position than the indoor unit.

WALL MOUNTED TYPE // INVERTER + // -15°C

Complete line-up of air purifying systems with high efficiency even at -15°c! This wall-mounted air conditioning is especially designed for professional applications such as computer rooms where cooling inside the room is necessary even when the outside temperature is low. Furthermore this air conditioner has an automatic changeover system, in order to maintain the inside temperature even when sharp outside temperature changes occur.

FOR E9

WALL MOUNTED TYPE // INVERTER + // -15°C

Kit			KIT-E9-HKEA	KIT-E12-HKEA	KIT-E15-HKEA	KIT-E18-HKEA	KIT-E21-HKEA
Indoor			CS-E9HKEA	CS-E12HKEA	CS-E15HKEA	CS-E18HKEA	CS-E21HKEA
Outdoor			CU-E9HKEA	CU-E12HKEA	CU-E15HKEA	CU-E18HKEA	CU-E21HKEA
Cooling capacity	Nominal (Min - Max)	kW	2.60 (0.80 - 3.00)	3.50 (0.80 - 4.00)	4.40 (0.80 - 5.00)	5.30 (0.90 - 6.00)	6.30 (0.90 - 7.10)
		kCal/h	2,240 (690 - 2,580)	3,010 (690 - 3,440)	3,780 (690 - 4,300)	4,560 (770 - 5,160)	5,420 (770 - 6,110)
EER [1]	Nominal (Min - Max)	Energy Saving Classification	4.41 (4.57 - 4.00) A	3.80 (4.32 - 3.33) A	3.21 (4.1 - 3.13) A	3.21 (4.19 - 2.93) A	2.85 (4.19 - 2.80) C
Power input Cooling	Nominal (Min - Max)	kW	0.590 (0.120 - 0.750)	0.920 (0.120 - 1.180)	1.370 (0.215 - 1.60)	1.650 (0.215 - 2.050)	2.210 (0.215 - 2.540)
Heating capacity	Nominal (Min - Max)	kW	3.60 (0.60 - 5.40)	4.80 (0.60 - 6.60)	5.50 (0.90 - 7.10)	6.60 (0.90 - 8.00)	7.20 (0.90 - 8.50)
		kCal/h	3,100 (520 - 4,640)	4,130 (520 - 5,680)	4,730 (770 - 6,110)	5,680 (770 - 6,880)	6,190 (770 - 7,310)
COP [1]	Nominal (Min - Max)	Energy Saving Classification	4.26 (4.85 - 3.73) A	3.81 (4.57 - 3.4) A	3.50 (4.32 - 3.49) B	3.69 (3.67 - 3.02) A	3.43 (3.67 - 3.09) B
Power input Heating	Nominal (Min - Max)	kW	0.845 (0.115 - 1.360)	1.260 (0.115 - 1.850)	1.570 (0.245 - 2.250)	1.790 (0.245 - 2.650)	2.100 (0.245 - 2.750)
Annual Energy Consumption [2]		kWh	295	460	685	825	1,105
Indoor unit							
Air Volume	Cooling / Heating	m^3/h	576 / 630	642 / 672	660 / 708	912 / 1,002	972 / 1,040
Moisture removal volume		l/h	1.6	2.0	2.4	2.9	3.5
Sound pressure level [3]	Cooling (Hi / Lo / S-Lo)	dB(A)	39 / 26 / 23	42 / 29 / 26	43 / 32 / 29	44 / 37 / 34	45 / 37 / 34
	Heating (Hi / Lo / S-Lo)	dB(A)	40 / 27 / 24	42 / 33 / 30	43 / 35 / 32	44 / 37 / 36	45 / 37 / 34
Sound power level	Cooling (Hi)	dB	50	53	54	57	58
	Heating (Hi)	dB	51	53	54	57	58
Dimensions. indoor	H x W x D	mm	280 x 799 x 183	280 x 799 x 183	280 x 799 x 183	275 x 998 x 230	275 x 998 x 230
Net weight		kg	9	9	9	11	11
Air purifier filter			Alleru-buster filter + Ion	Alleru-buster filter + Ion	Alleru-buster filter + Ion	Alleru-buster filter + Ion	Alleru-buster filter + Ion
Outdoor unit							
Power source		V	230	230	230	230	230
Connection		mm^2	4 x 2.5	4 x 2.5	4 x 2.5	4 x 2.5	4 x 2.5
Current Cooling	Nominal	A	2.9	4.3	6.3	7.5	9.9
Current Heating	Nominal	A	4.0	5.8	7.1	8.1	9.3
Air Volume	Cooling / Heating	m^3/h	576 / 630	642 / 672	660 / 708	912 / 1,002	972 / 1,038
Sound pressure level [3]	Cooling (Hi)	dB(A)	46	48	46	47	48
	Heating (Hi)	dB(A)	47	50	46	47	49
Sound power level	Cooling (Hi)	dB	59	61	59	60	61
	Heating (Hi)	dB	60	63	59	60	62
Dimensions [4]	H x W x D	mm	540 x 780 x 289	540 x 780 x 289	750 x 875 x 345	750 x 875 x 345	750 x 875 x 345
Net weight		kg	35	35	48	49	51
Piping connections	Liquid pipe	inch (mm)	1/4" (6.35)	1/4" (6.35)	1/4" (6.35)	1/4" (6.35)	1/4" (6.35)
	Gas pipe	inch (mm)	3/8" (9.52)	1/2" (12.70)	1/2" (12.70)	1/2" (12.70)	1/2" (12.70)
Refrigerant Loading	R410A	kg	0.965	0.98	1.05	1.18	1.29
Elevation difference (in/out) [5]	Max	m	5	5	5	15	15
Piping length	Min / Max	m	3 / 15	3 / 15	3 / 15	3 / 20	3 / 20
Piping length without refegirent increase	Max	m	7.5	7.5	7.5	10	10
Additional gas		g/m	20	20	20	20	20
Operating range, outdoor [3]	Cooling Min / Max	°c	-15 / +43	-15 / +43	-15 / +43	-15 / +43	-15 / +43
	Heating Min / Max	°c	-10 / +24	-10 / +24	-15 / +24	-15 / +24	-15 / +24

GLOBAL REMARKS

Rating conditions	Cooling	Heating
Inside air temperature	27°C DB / 19°C WB	20°C DB
Outside air temperature	35°C DB / 24°C WB	7°C DB / 6°C WB

DB : Dry buld; WB : Wet buld

These indoor/outdoor units are not suitable for Nordic countries No warranty can be applied if installed in Nordic countries

1) EER and COP classification is at 230V in accordance with EU directive 2002/31/EC.

2) The annual consumption is calculated by multiplying the input power at 230V by an avarage of 500 hours per year in cooling mode.

3) The Sound pressure level of the units shows the value measured of a position 1 meter in front of the main body and 0,8 meters below the unit. The sound pressure is measured in accordance with Eurovent 6/C/006-97 specification.

4) Add 70mm for piping port.

5) When installing the outdoor unit at a higher position than the indoor unit.

CS-E9HKEA // CS-E12HKEA // CS-E15HKEA

TECHNICAL FOCUS

- HIGHLY EFFICIENT HEAT PUMP AND COOLING EVEN AT -15°C
- SUPERSONIC AIR PURIFYING SYSTEM WITH ALLERU-BUSTER ANTI ALLERGIC FILTER
- SUPER QUIET! ONLY 23DB
- MORE POWERFUL AIRFLOW TO QUICKLY REACH THE DESIRED TEMPERATURE
- MAXIMUM CONNECTION DISTANCE 15 M (E9, 12, 15), 20M (E18, 21)

CS-E18HKEA // CS-E21HKEA

KIT-E9-HKEA // KIT-E12-HKEA // KIT-E15-HKEA // KIT-E18-HKEA // KIT-E21-HKEA

HEALTHY AIR
- Refreshing ion generator boosts well-being
- Alleru-buster anti allergic filter
- Soft dry operation mode

ENERGY EFFICIENCY AND ECOLOGY
- Maximum efficiency inverter system
- R410A refrigerant gas

COMFORT
- Operates in cold/hot mode in temperatures as low as -15°C
- Automatically changes from cold to hot depending on inside temperature
- Super Quiet mode
- Powerful mode
- Uniform dispersion of airflow
- Automatic vertical and horizontal airflow control
- Hot start mode
- Automatic restart

EASE OF USE
- 24-hr timer
- User friendly infrared remote control

EASY INSTALLATION AND MAINTENANCE
- Removable, washable panel
- Maximum connection distance 15 m (E9, 12, 15), 20m (E18, 21)
- Maintenance access through the top panel of the outdoor unit
- Self-diagnosis function with anti-allergen ultrasound filter
- Soft dry operation mode

CU-E9HKEA
CU-E12HKEA

CU-E15HKEA
CU-E18HKEA
CU-E21HKEA

OPTIONAL

WALL-MOUNTED TYPE // STANDARD HEAT PUMP

Powerful heat pump non-inverter air conditioning. A class efficiency for high savings.

WALL-MOUNTED TYPE // STANDARD HEAT PUMP

Kit			KIT-PW9-GKE	KIT-PW12-GKE	KIT-PW18-GKE	KIT-PW24-JKE
Indoor			CS-PW9GKE	CS-PW12GKE	CS-PW18GKE	CS-PW24JKE
Outdoor			CU-PW9GKE	CU-PW12GKE	CU-PW18GKE	CU-PW24JKE
Cooling capacity	Nominal	kW	2.65	3.4	5.10	7.03
		kCal/h	2,280	2,920	4,386	6,046
EER [1]	Nominal	Energy Saving Classification	3.21 A	3.22 A	2.91 C	2.53 E
Power input Cooling	Nominal	kW	0.825	1.055	1.75	2.78
Heating capacity	Nominal	kW	2.85	3.8	5.30	7.50
		kCal/h	2,450	3,260	4,560	6,450
COP [1]	Nominal	Energy Saving Classification	3.63 A	3.61 A	3.35 C	2.87 D
Power input Heating	Nominal	kW	0.785	1.05	1.58	2.61
Annual Energy Consumption [2]		kWh	413	528	875	1,390
Indoor unit						
Power source		V	230	230	230	230
Connection		mm²	4 x 1.5	4 x 1.5	4 x 1.5	4 x 1.5
Current Cooling	Nominal	A	3.9	5.0	7.7	13.1
Current Heating	Nominal	A	3.7	4.9	6.9	12.5
Air Volume	Cooling / Heating	m³/h	618 / 618	540 / 552	972 / 984	1,044 / 1,092
Moisture removal volume		l/h	1.6	1.9	2.9	4.0
Sound pressure level [3]	Cooling (Hi / Lo / S-Lo)	dB(A)	39 / 31	39 / 32	45 / 38	47 / 41
	Heating (Hi / Lo / S-Lo)	dB(A)	39 / 31	39 / 31	43 / 38	46 / 41
Sound power level	Cooling (Hi)	dB	50	50	58	59
	Heating (Hi)	dB	50	50	56	57
Dimensions	H x W x D	mm	250 x 770 x 205	280 x 799 x 183	275 x 998 x 230	275 x 998 x 230
Net weight		kg	7.5	9	11	11
Air purifier filter	Optional		CZ-SA14P Alleru-buster filter	CZ-SA14P Alleru-buster filter	CZ-SA14P Alleru-buster filter	CZ-SA14P Alleru-buster filter
Outdoor unit						
Air Volume	Cooling / Heating	m³/h	576 / 630	642 / 672	912 / 1,002	3,084
Sound pressure level [3]	Cooling (Hi)	dB(A)	48	49	55	54
	Heating (Hi)	dB(A)	49	50	55	55
Sound power level	Cooling (Hi)	dB	61	62	70	69
	Heating (Hi)	dB	62	63	70	70
Dimensions [4]	H x W x D	mm	530 x 650 x 230	540 x 780 x 289	540 x 780 x 289	750 x 875 x 345
Net weight		kg	27	30	44	63
Piping connections	Liquid pipe	inch (mm)	1/4" (6.35)	1/4" (6.35)	1/4" (6.35)	1/4" (6.35)
	Gas pipe	inch (mm)	3/8" (9.52)	3/8" (9.52)	1/2" (12.70)	5/8" (15.88)
Refrigerant Loading	R410A	kg	0.80	0.98	1.33	
Elevation difference (in/out) [5]	Max	m	5	5	20	20
Piping length	Min / Max	m	3 / 10	3 / 15	3 / 25	3 / 25
Piping length without refegirent increase	Max	m	7.5	7.5	7.5	7.5
Additional gas		g/m	20	20	20	30
Operating range, outdoor [3]	Cooling Min / Max	°c	21 / 43	21 / 43	16 / 43	16 / 43
	Heating Min / Max	°c	-5 / 24	-5 / 24	-5 / 24	-5 / 24

GLOBAL REMARKS

Rating conditions	Cooling	Heating
Inside air temperature	27°C DB / 19°C WB	20°C DB
Outside air temperature	35°C DB / 24°C WB	7°C DB / 6°C WB

DB : Dry buld; WB : Wet buld

These indoor/outdoor units are not suitable for Nordic countries No warranty can be applied if installed in Nordic countries

1) EER and COP classification is at 230V in accordance with EU directive 2002/31/EC.

2) The annual consumption is calculated by multiplying the input power at 230V by an avarage of 500 hours per year in cooling mode.

3) The Sound pressure level of the units shows the value measured of a position 1 meter in front of the main body and 0,8 meters below the unit. The sound pressure is measured in accordance with Eurovent 6/C/006-97 specification.

4) Add 70mm for piping port.

5) When installing the outdoor unit at a higher position than the indoor unit.

CS-PW9GKE // CS-PW12GKE

TECHNICAL FOCUS

- QUIET MODE FOR IMPROVED COMFORT
- ODOUR REMOVING FUNCTION
- EASY TO INSTALL
- R410A REFRIGERANT GAS
- MANUAL AND AUTOMATIC AIRFLOW CONTROL

CS-PW18GKE // CS-PW24JKE

KIT-PW9-GKE // KIT-PW12-GKE // KIT-PW18-GKE // KIT-PW24-JKE

HEALTHY AIR
- Soft dry operation mode
- Odour-removing function
- CZ-SA14P Alleru-buster anti allergic filter (optional)

ENERGY EFFICIENCY AND ECOLOGY
- R410A refrigerant gas

COMFORT
- Manual horizontal airflow control
- Automatic vertical airflow control
- Hot start mode
- Automatic restart

EASE OF USE
- 12-hr timer
- User friendly infrared remote control

EASY INSTALLATION AND MAINTENANCE
- Removable, washable panel
- Maintenance access through the top panel of the outdoor unit

FOR PW9 AND PW12

FOR PW18

CU-PW9GKE

CU-PW12GKE

CU-PW18GKE

CU-PW24JKE

UW SERIES // AIR CONDITIONING

powerful
and efficient

WALL MOUNTED // INVERTER

UW INVERTER MODELS ARE POWERFUL AND EFFICIENT.

KIT-UW9-GKE // KIT-UW12-GKE

HEALTHY AIR
- Odour-removing function
- Anti-mould filter

ENERGY, EFFICIENCY AND ECOLOGY
- R410A refrigerant gas

COMFORT
- Auto changeover
- Automatic vertical airflow control
- Hot start mode
- Automatic restart

EASE OF USE
- 12-hr timer
- User friendly infrared remote control

EASY INSTALLATION AND MAINTENANCE
- Maximum connection distance 10 m
- Removable, washable panel

TECHNICAL FOCUS

- AUTO CHANGEOVER
- 12-HR REMOTE CONTROL TIMER

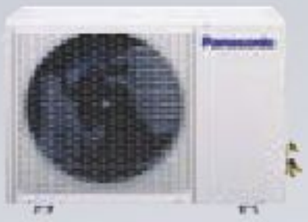

CU-UW9GKE
CU-UW12GKE

WALL MOUNTED // INVERTER

Kit			KIT-UW9-GKE	KIT-UW12-GKE
Indoor			CS-UW9GKE	CS-UW12GKE
Outdoor			CU-UW9GKE	CU-UW12GKE
Cooling capacity	Nominal (Min - Max)	kW	2.50 (0.90-3.00)	3.30 (0.90-3.90)
	Nominal (Min - Max)	kCal/h	2,150 (770-2,580)	2,840 (770-3,350)
EER [1]	Nominal (Min - Max)	Energy Saving Classification	3.08 (4.73-3.00) B	3.05 (5.29-3.25) B
Power input Cooling	Nominal (Min - Max)	kW	0.81 (0.19-1.00)	1.08 (0.17-1.2)
Heating capacity	Nominal (Min - Max)	kW	2.7 (0.90-4.00)	3.7 (0.90-4.70)
	Nominal (Min - Max)	kCal/h	2,32 (770-3,440)	3,18 (770-4,04)
COP [1]	Nominal (Min - Max)	Energy Saving Classification	3.46 (4.09-3.33) B	3.49 (6.00-3.56) B
Power input Heating	Nominal (Min - Max)	kW	0.78 (0.22-1.2)	1.06 (0.15-1.32)
Annual Energy Consuption [2]		kWh	405	540
Indoor unit				
Power source		V	230	230
Connection		mm^2	4 x 1.5	4 x 1.5
Current (Nominal)	Cooling / Heating	A	3.8 / 3.7	5.0 / 4.8
Air Volume	Cooling / Heating	m^3/h	618 / 618	540 / 552
Moisture removal volume		l/h	1.4	1.9
Sound pressure Level [3]	Cooling (Hi / Lo / S-Lo)	dB(A)	48 / 39 /31	49 / 39 / 32
	Heating (Hi / Lo / S-Lo)	dB(A)	49 / 39 / 31	50 / 39 / 31
Sound power Level	Cooling / Heating (Hi)	dB	50 / 50	50 / 50
Dimensions	H x W x D	mm	250 x 770 x 205	280 x 799 x 183
Net weight		kg	7.5	9.0
Outdoor unit				
Sound pressure Level [3]	Cooling / Heating (Hi)	dB(A)	48 / 49	49 / 50
Sound power Level	Cooling / Heating (Hi)	dB	61 / 62	62 / 63
Dimensions [4]	H x W x D	mm	530 x 650 x 230	540 x 780 x 289
Net weight		kg	27	30
Piping connections	Liquid / Gaz pipe	inch (mm)	1/4" (6.35) / 3/8" (9.52)	1/4" (6.35) / 3/8" (9.52)
Elevation difference (in/out) [5]	Max	m	5	5
Piping lenght	Min / Max	m	3 / 10	3 / 10
Operating range [3]	Cooling Min / Max	°c	+21 / +43	+21 / +43
	Heating Min / Max	°c	-5 / +24	-5 / +24

GLOBAL REMARKS

Rating conditions	Cooling	Heating
Inside air temperature	27°C DB / 19°C WB	20°C DB
Outside air temperature	35°C DB / 24°C WB	7°C DB / 6°C WB

DB : Dry buld; WB : Wet buld

These indoor/outdoor units are not suitable for Nordic countries No warranty can be applied if installed in Nordic countries

1) EER and COP classification is at 230V in accordance with EU directive 2002/31/EC.
2) The annual consumption is calculated by multiplying the input power at 230V by an avarage of 500 hours per year in cooling mode.
3) The Sound pressure level of the units shows the value measured of a position 1 meter in front of the main body and 1,5 from the ground. The sound pressure is measured in accordance with Eurovent 6/C/006-97 specification.
4) Add 70mm for piping port.
5) When installing the outdoor unit at a higher position than the indoor unit.

FLOOR CONSOLE TYPE // INVERTER +

Console for discreet integration on walls, and for high performances, specifically in heat mode even when the outside temperature is as low as -15°C.
Double airflow for improved comfort and temperature dispersion: through the top for an efficient cooling mode, through the bottom for quick heating.

FLOOR CONSOLE TYPE // INVERTER +

Kit			KIT-E9-GFE-1	KIT-E12-GFE-1	KIT-E18-GFE-1
Indoor			CS-E9GFEW	CS-E12GFEW	CS-E18GFEW
Outdoor			CU-E9GFE-1	CU-E12GFE-1	CU-E18GFE-1
Cooling capacity	Nominal (Min - Max)	kW	2.50 (0.80 - 3.00)	3.50 (0.80 - 3.80)	5.00 (0.90 - 5.60)
		kCal/h	2,150 (690 - 2,580)	3,010 (690 - 3,270)	3,780 (770 - 4,300)
EER [1]	Nominal (Min - Max)	Energy Saving Classification	4.39 (4.57 - 3.85) A	3.63 (4.32 - 3.33) A	3.23 (4.57 - 2.93) A
Power input Cooling	Nominal (Min - Max)	kW	0.57 (0.17 - 0.78)	0.97 (0.18 - 1.14)	1.55 (0.25 - 1.91)
Heating capacity	Nominal (Min - Max)	kW	3.60 (0.80 - 5.00)	4.80 (0.80 - 6.10)	5.80 (0.90 - 7.10)
		kCal/h	3,100 (690 - 4,300)	4,130 (690 - 5,250)	4,730 (770 - 6,110)
COP [1]	Nominal (Min - Max)	Energy Saving Classification	4.16 (4.85 - 3.68) A	3.64 (4,57 - 3.45) A	3.63 (3.46 - 3.02) B
Power input Heating	Nominal (Min - Max)	kW	0.865 (0.16 - 1.36)	1.320 (0.17 - 1.77)	1.600 (0.26 - 2.35)
Annual Energy Consumption [2]		kWh	285	483	775
Indoor unit					
Air Volume	Cooling / Heating	m^3/h	558 / 576	570 / 600	660 / 780
Moisture removal volume		l/h	1.4	2.0	2.8
Sound pressure level [3]	Cooling (Hi / Lo / S-Lo)	dB(A)	38 / 27 / 23	39 / 28 / 24	44 / 36 / 32
	Heating (Hi / Lo / S-Lo)	dB(A)	38 / 27 / 23	39 / 27 / 23	46 / 36 / 32
Sound power level	Cooling (Hi)	dB	54	55	60
	Heating (Hi)	dB	54	55	62
Dimensions	H x W x D	mm	600 x 700 x 210	600 x 700 x 210	600 x 700 x 210
Net weight		kg	14	14	14
Outdoor unit					
Power source		V	230	230	230
Connection		mm^2	4 x 1.5	4 x 1.5	4 x 1.5
Current Cooling	Nominal	A	2.7	4.4	7.0
Current Heating	Nominal	A	4.05	6.0	7.1
Air Volume	Cooling / Heating	m3/h	1,788 / 1,788	1,860 / 1,660	2,400 / 2,316
Sound pressure level [3]	Cooling (Hi)	dB(A)	46	48	47
	Heating (Hi)	dB(A)	47	50	48
Sound power level	Cooling (Hi)	dB	59	61	60
	Heating (Hi)	dB	60	63	61
Dimensions [4]	H x W x D	mm	540 x 780 x 289	540 x 780 x 289	750 x 875 x 345
Net weight		kg	37	37	48
Piping connections	Liquid pipe	inch (mm)	1/4" (6.35)	1/4" (6.35)	1/4" (6.35)
	Gas pipe	inch (mm)	3/8" (9.52)	3/8" (9.52)	1/2" (12.70)
Refrigerant Loading	R410A	kg	0.965	0.980	1.060
Elevation difference (in/out) [5]	Max	m	5	5	15
Piping length	Min / Max	m	3 / 15	3 / 15	3 / 20
Piping length without refegirent increase	Max	m	7.5	7.5	10
Additional gas		g/m	20	20	20
Operating range, outdoor [3]	Cooling Min / Max	°c	16 / 43	16 / 43	16 / 43
	Heating Min / Max	°c	-15 / 24	-15 / 24	-15 / 24

GLOBAL REMARKS

Rating conditions	Cooling	Heating
Inside air temperature	27°C DB / 19°C WB	20°C DB
Outside air temperature	35°C DB / 24°C WB	7°C DB / 6°C WB

DB : Dry buld; WB : Wet buld
These indoor/outdoor units are not suitable for Nordic countries No warranty can be applied if installed in Nordic countries

1) EER and COP classification is at 230V in accordance with EU directive 2002/31/EC.
2) The annual consumption is calculated by multiplying the input power at 230V by an avarage of 500 hours per year in cooling mode.
3) The Sound pressure level of the units shows the value measured of a position 1 meter in front of the main body and 0,8 meters below the unit. The sound pressure is measured in accordance with Eurovent 6/C/006-97 specification.
4) Add 70mm for piping port.
5) When installing the outdoor unit at a higher position than the indoor unit.

TECHNICAL FOCUS

- MORE EFFICIENT THAN EVER FOR LESS CONSUMPTION AND HIGHER SAVINGS
- HEATING MODE DOWN TO -15°C WITH HIGH EFFICIENCY
- DOUBLE AIRFLOW FOR BETTER EFFICIENCY
- POWERFUL MODE FOR QUICK TEMPERATURE SETTING
- R410A REFRIGERANT GAS

KIT-E9-GFE-1 // KIT-E12-GFE-1 // KIT-E18-GFE-1

HEALTHY AIR
- Soft dry operation mode
- Odour-removing function
- CZ-SA14P Alleru-buster anti allergic filter (optional)

ENERGY EFFICIENCY AND ECOLOGY
- Maximum efficiency inverter system
- R410A refrigerant gas

COMFORT
- Super Quiet mode
- Powerful mode
- Automatic vertical airflow control
- Hot start mode
- Automatic restart

EASE OF USE
- 24-hr timer
- User friendly infrared remote control

EASY INSTALLATION AND MAINTENANCE
- Removable, washable panel
- Maximum connection distance 15 m (E9, 12), 20m (E18)
- Maintenance access through the top panel of the outdoor unit
- Self-diagnosis function

CU-E9GFE-1
CU-E12GFE-1

CU-E18GFE-1

SINGLE SPLIT FLOOR OR CEILING TYPE // INVERTER

Versatile Floor or Ceiling air conditioning inverter type. Ideal for restaurants or offices where powerful and efficient air-conditioning is needed.

OPTIONAL

SINGLE SPLIT FLOOR OR CEILING TYPE // INVERTER

Kit			KIT-E15-DTE	KIT-E18-DTE	KIT-E21-DTE
Indoor			**CS-E15DTEW**	**CS-E18DTEW**	**CS-E21DTES**
Outdoor			**CU-E15DBE**	**CU-E18DBE**	**CU-E21DBE**
Cooling capacity	Nominal (Min - Max)	kW	4.15 (0.90 - 4.55)	5.00 (0.90 - 5.40)	5.80 (0.90 - 6.60)
		kCal/h	3,570 (770 - 3,910)	4,300 (770 - 4,640)	4,990 (770 - 5,680)
EER [1]	Nominal (Min - Max)	Energy Saving Classification	3.22 A	3.01 B	3.01 B
Power input Cooling	Nominal (Min - Max)	kW	1.29 (0.255 - 1.550)	1.66 (0.255 - 1.890)	1.93 (0.255 - 2.240)
Heating capacity	Nominal (Min - Max)	kW	5.17 (0.90 - 6.30)	6.10 (0.90 - 7.60)	6.80 (0.90 - 8.10)
		kCal/h	4,450 (770 - 5,420)	5,250 (770 - 6,540)	5,850 (770 - 6,970)
COP [1]	Nominal (Min - Max)	Energy Saving Classification	3.34 C	3.35 C	3.42 B
Power input Heating	Nominal (Min - Max)	kW	1.550 (0.260 - 2.050)	1.820 (0.260 - 2.380)	1.990 (0.260 - 2.650)
Annual Energy Consumption [2]		kWh	645	830	965
Indoor unit					
Air Volume	Cooling / Heating	m^3/h	720 / 732	750 / 762	786 / 792
Moisture removal volume		l/h	2.4	2.8	3.2
Sound pressure level [3]	Cooling (Hi / Lo / S-Lo)	dB(A)	45 / 37 / 34	46 / 39 / 36	47 / 41 / 38
	Heating (Hi / Lo / S-Lo)	dB(A)	45 / 33 / 30	47 / 35 / 32	47 / 37 / 34
Sound power level	Cooling (Hi)	dB	58	59	60
	Heating (Hi)	dB	58	60	60
Dimensions	H x W x D	mm	540 x 1,028 x 200	540 x 1,028 x 200	540 x 1,028 x 200
Net weight		kg	17	18	20
Air purifier filter	Optional		CZ-SA14P Alleru-buster filter	CZ-SA14P Alleru-buster filter	CZ-SA14P Alleru-buster filter
Outdoor unit					
Power source		V	230	230	230
Connection		mm^2	4 x 1.5	4 x 2.5	4 x 2.5
Current Cooling	Nominal	A	6.0	7.5	8.7
Current Heating	Nominal	A	7.1	8.2	9.0
Air Volume	Cooling / Heating	m^3/h	2,910 / 2,808	2,400 / 2,316	2,568 / 2,490
Sound pressure level [3]	Cooling (Hi)	dB(A)	46	47	48
	Heating (Hi)	dB(A)	47	48	49
Sound power level	Cooling (Hi)	dB	59	60	61
	Heating (Hi)	dB	60	61	62
Dimensions [4]	H x W x D	mm	750 x 875 x 345	750 x 875 x 345	750 x 875 x 345
Net weight		kg	48	48	49
Piping connections	Liquid pipe	inch (mm)	1/4" (6.35)	1/4" (6.35)	1/4" (6.35)
	Gas pipe	inch (mm)	1/2" (12.70)	1/2" (12.70)	1/2" (12.70)
Refrigerant Loading	R410A	kg	1.23	1.06	1.15
Elevation difference (in/out) [5]	Max	m	15	15	15
Piping length	Min / Max	m	3 / 20	3 / 20	3 / 20
Piping length without refegirent increase	Max	m	10	10	10
Additional gas		g/m	20	20	20
Operating range, outdoor [3]	Cooling Min / Max	°c	16 / 43	16 / 43	16 / 43
	Heating Min / Max	°c	-5 / 24	-5 / 24	-5 / 24

GLOBAL REMARKS

Rating conditions	Cooling	Heating
Inside air temperature	27°C DB / 19°C WB	20°C DB
Outside air temperature	35°C DB / 24°C WB	7°C DB / 6°C WB

DB : Dry buld; WB : Wet buld

These indoor/outdoor units are not suitable for Nordic countries No warranty can be applied if installed in Nordic countries

1) EER and COP classification is at 230V in accordance with EU directive 2002/31/EC.

2) The annual consumption is calculated by multiplying the input power at 230V by an avarage of 500 hours per year in cooling mode.

3) The Sound pressure level of the units shows the value measured of a position 1 meter in front of the main body and 0,8 meters below the unit. The sound pressure is measured in accordance with Eurovent 6/C/006-97 specification.

4) Add 70mm for piping port.

5) When installing the outdoor unit at a higher position than the indoor unit.

TECHNICAL FOCUS

- A WIDTH OF ONLY 20CM FOR EASY INSTALLATION EVERYWHERE
- 2 INSTALLATIONS POSSIBLE: ON THE WALL OR ON THE ROOF
- POWERFUL LINE-UP, UP TO 6.6 KW!
- POWERFUL MODE FOR QUICK TEMPERATURE SETTING
- R410A REFRIGERANT GAS
- 20 M CONNECTION DISTANCE, 15 M HEIGHT DIFFERENCE ON THE WHOLE LINE-UP

KIT-E15-DTE // KIT-E18-DTE // KIT-E21-DTE

HEALTHY AIR
- Soft dry operation mode
- Odour-removing function
- CZ-SA14P Alleru-buster anti allergic filter (optional)
- Anti-mould filter

ENERGY EFFICIENCY AND ECOLOGY
- Inverter system
- R410A refrigerant gas

COMFORT
- Super Quiet mode
- Powerful mode
- Automatic vertical airflow control
- Hot start mode
- Automatic restart

EASE OF USE
- 24-hr timer
- User friendly infrared remote control

EASY INSTALLATION AND MAINTENANCE
- Maximum connection distance 20m
- Maintenance access through the top panel of the outdoor unit
- Self-diagnosis function

CU-E15DTE
CU-E18DTE

CU-E21DTE

MULTI SPLIT 2X1 // E-ION PLUS

MULTI SPLIT 2X1 SYSTEM WITH AIR PURIFIER AND AIR CONDITIONER

You can enjoy healthy air at home, whether the air conditioning is running or not. the revolutionary new E-ion plus system removes viruses, dust and bad odours from the air.
The indoor unit runs silently. When you press the quiet mode button on the remote control, the operating sound level reduces even further, down to 20dB.
Using a Multi Split 2X1 Inverter+ system with the outdoor unit CU-2E15GBE instead of 2 individual mono split inverter+ systems, you reduce consumption and thus save more! Up to 10%!
Furthermore, using a Multi Split system, you save space on the outdoor unit, making it easier to install in small spaces.
The multi system also has a greater difference in elevation and longer tubing, leading to greater flexibility on roof installations.

MULTI SPLIT 2X1 E-ION PLUS

Kit			KIT-2E77-HKE-1	KIT-2E712-HKE-1	KIT-2E912-HKE	KIT-2E1212-HKE
Indoor			CS-E7HKEW	CS-E7HKEW	CS-E9HKEW	CS-E12HKEW
Indoor			CS-E7HKEW	CS-E12HKEW	CS-E12HKEW	CS-E12HKEW
Outdoor			CU-2E15GBE-1	CU-2E15GBE-1	CU-2E18CBPG	CU-2E18CBPG
Cooling capacity	Nominal (Min - Max)	kW	4.50 (1.50 - 5.00)	4.50 (1.50 - 5.20)	5.00 (1.50 - 5.30)	5.20 (1.50 - 5.40)
		kCal/h	3,870 (1,290 - 4,300)	3,870 (1,290 - 4,472)	4,300 (1,290 - 4,558)	4,472 (1,290 - 4,644)
EER [1]	Nominal (Min - Max)	Energy Saving Classification	3.66 (6.00 - 3.70) A	3.66 (6.00 - 3.42) A	3.36 (6.00 - 3.44) A	3.42 (6.00 - 3.53) A
Power input Cooling	Nominal (Min - Max)	kW	1.23 (0.25 - 1.35)	1.23 (0.25 - 1.52)	1.49 (0.25 - 1.54)	1.52 (0.25 - 1.58)
Heating capacity	Nominal (Min - Max)	kW	5.40 (1.10 - 7.00)	5.40 (1.10 - 7.00)	5.60 (1.10 - 7.20)	5.60 (1.10 - 7.20)
		kCal/h	4,644 (946 - 6,020)	4,644 (946 - 6,020)	4,816 (946 - 6,192)	4,816 (946 - 6,192)
COP [1]	Nominal (Min - Max)	Energy Saving Classification	4.62 (5.24 - 4.19) A	4.62 (5.24 - 4.19) A	4.55 (5.23 - 4.19) A	4.63 (5.23 - 4.23) A
Power input Heating	Nominal (Min - Max)	kW	1.17 (0.21 - 1.67)	1.17 (0.21 - 1.67)	1.23 (0.21 - 1.72)	1.21 (0.21 - 1.70)
Annual Energy Consumption [2]		kWh	615	625	745	760
Indoor unit						
Air Volume	Cooling	m^3/h	612	612 / 672	624 / 672	672
Moisture removal volume		l/h	1.3	1.3 / 2.0	1.6 / 2.0	2.0
Sound pressure level [3]	Cooling (S-Lo)	dB(A)	20	20	20	20
	Heating (S-Lo)	dB(A)	22	22 (E7) / 30 (E12)	22 (E9) / 30 (E12)	30
Sound power level	Cooling (Hi)	dB	48	48 (E7) / 53 (E12)	50 (E9) / 53 (E12)	53
	Heating (Hi)	dB	49	49 (E7) / 53 (E12)	51 (E7) / 53(E12)	53
Dimensions	H x W x D	mm	280 x 799 x 183	280 x 799 x 183	280 x 799 x 183	280 x 799 x 183
Net weight		kg	9	9	9	9
Air purifier filter			Patrol + E-ion+	Patrol + E-ion+	Patrol + E-ion+	Patrol + E-ion+
Outdoor unit						
Power source		V	230	230	230	230
Connection		mm^2	4 x 1.5	4 x 1.5	4 x 1.5	4 x 1.5
Current Cooling	Nominal	A	5.75	5.75	6.95	7.10
Current Heating	Nominal	A	5.20	5.20	5.45	5.35
Air Volume	Cooling / Heating	m^3/h	1,998 / 1,710	1,998 / 1,710	2,070 / 1,860	2,070 / 1,860
Sound pressure level [3]	Cooling (Hi)	dB(A)	47	49	47	49
	Heating (Hi)	dB(A)	49	51	49	51
Sound power level	Cooling (Hi)	dB	62	62	64	64
	Heating (Hi)	dB	64	64	66	66
Dimensions [4]	H x W x D	mm	540 x 780 (+70) x 289	540 x 780 (+70) x 289	540 x 780 (+70) x 289	540 x 780 (+70) x 289
Net weight		kg	38	38	38	38
Piping connections	Liquid pipe	inch (mm)	1/4" (6.35)	1/4" (6.35)	1/4" (6.35)	1/4" (6.35)
	Gas pipe	inch (mm)	3/8" (9.52)	3/8" (9.52)	3/8" (9.52)	3/8" (9.52)
Refrigerant Loading	R410A	kg	1.45	1.45	1.45	1.45
Elevation difference (in/out) [5]	Max	m	10	10	10	10
Piping length	Total	m	30	30	30	30
Piping length (one unit)	Min / Max	m	3 / 20	3 / 20	3 / 20	3 / 20
Piping length without refegirent increase	Max	m	20	20	20	20
Additional gas		g/m	20	20	20	20
Operating range. outdoor [3]	Cooling Min / Max	°c	16 / 43	16 / 43	16 / 43	16 / 43
	Heating Min / Max	°c	-15 / 24	-15 / 24	-15 / 24	-15 / 24

GLOBAL REMARKS

Rating conditions	Cooling	Heating
Inside air temperature	27°C DB / 19°C WB	20°C DB
Outside air temperature	35°C DB / 24°C WB	7°C DB / 6°C WB

DB : Dry buld; WB : Wet buld
These indoor/outdoor units are not suitable for Nordic countries No warranty can be applied if installed in Nordic countries

1) EER and COP classification is at 230V in accordance with EU directive 2002/31/EC.
2) The annual consumption is calculated by multiplying the input power at 230V by an avarage of 500 hours per year in cooling mode.
3) The Sound pressure level of the units shows the value measured of a position 1 meter in front of the main body and 0,8 meters below the unit. The sound pressure is measured in accordance with Eurovent 6/C/006-97 specification.
4) Add 70mm for piping port.
5) When installing the outdoor unit at a higher position than the indoor unit.

TECHNICAL FOCUS

- NEW GENERATION OF E-ION AIR PURIFYING SYSTEM WITH 24-HR PATROL SENSOR
- SUPER QUIET! ONLY 20DB, EQUIVALENT TO NIGHT-TIME IN THE COUNTRY

KIT-2E77-HKE-1 // KIT-2E712-HKE-1 // KIT-2E912-HKE // KIT-2E1212-HKE

HEALTHY AIR
- E-ion plus air purifying system
- Patrol sensor to detect and eliminate contaminants
- Air conditioner and purifier with simultaneous or independent operation
- Soft dry operation mode

ENERGY EFFICIENCY AND ECOLOGY
- Maximum efficiency Inverter system
- R410A refrigerant gas

COMFORT
- Operates in hot mode in temperatures as low as -15°C
- Super Quiet mode
- Powerful mode
- Uniform dispersion of airflow
- Automatic vertical airflow control
- Hot start mode
- Automatic restart

EASE OF USE
- 24-Hour timer
- User friendly infrared remote control

EASY INSTALLATION AND MAINTENANCE
- Removable, washable panel
- 20m maximum connection distance
- 10m maximum elevation difference
- Maintenance access through the top panel of the outdoor unit
- Self-diagnosis function

CU-2E15GBE-1
CU-2E18CBPG

ETHEREA MULTI SPLIT 2X1 // INVERTER +

ETHEREA, A NEW CONCEPT IN AIR CONDITIONERS: AIR PURIFYING SYSTEM, STYLISH DESIGN AND HIGH EFFICIENCY. WITH THE MULTI SYSTEM, SAVE MORE THAN WITH THE 1X1!

Cool and stylish, the distinctive, beautiful rounded form is designed to complement today's modern interiors. Etherea has an advanced air purifying system with the new Patrol Sensor to detect and eliminate contaminants. Using a Multi Split 2X1 Inverter+ system with the outdoor unit CU-2E15GBE instead of 2 individual mono split inverter+ systems, you reduce consumption and thus save more! Up to 10%! Furthermore, using a Multi Split system, you save space on the outdoor unit, making it easier to install in small spaces.
The multi system also has a greater difference in elevation and longer tubing, leading to greater flexibility on roof installations.

ETHEREA MULTI SPLIT 2X1 // INVERTER +

Silver Kit			KIT-2XE77-JKE	KIT-2XE79-JKE	KIT-2XE712-JKE	KIT-2XE99-JBE
Indoor			CS-XE7JKEW CS-XE7JKEW	CS-XE7JKEW CS-XE9JKEW	CS-XE7JKEW CS-XE12JKEW	CS-XE9JKEW CS-XE9JKEW
White Kit			KIT-2E77-JKE	KIT-2E79-JKE	KIT-2E712-JKE	KIT-2E99-JBE
Indoor			CS-E7JKEW CS-E7JKEW	CS-E7JKEW CS-E9JKEW	CS-E7JKEW CS-E12JKEW	CS-E9JKEW CS-E9JKEW
Outdoor			CU-2E15GBE-1	CU-2E15GBE-1	CU-2E15GBE-1	CU-2E15GBE-1
Cooling capacity	Nominal (Min - Max)	kW	4.50 (1.50 - 5.00)	4.50 (1.50 - 5.20)	4.50 (1.50 - 5.20)	4.50 (1.50 - 5.20)
	Nominal (Min - Max)	kCal/h	3,870 (1,290 - 4,300)	3,870 (1,290 - 4,472)	3,870 (1,290 - 4,472)	3,870 (1,290 - 4,472)
EER [1]	Nominal (Min - Max)	Energy Saving Classification	3.66 (6.00 - 3.70) A	3.66 (6.00 - 3.70) A	3.60 (6.00 - 3.42) A	3.66 (6.00 - 3.42) A
Power input Cooling	Nominal (Min - Max)	kW	1.23 (0.25 - 1.35)	1.23 (0.25 - 1.52)	1.25 (0.25 - 1.53)	1.23 (0.25 - 1.52)
Heating capacity	Nominal (Min - Max)	kW	5.40 (1.10 - 7.00)	5.40 (1.10 - 7.00)	5.40 (1.10 - 7.0)	5.40 (1.10 - 7.0)
	Nominal (Min - Max)	kCal/h	4,644 (946 - 6,020)	4,644 (946 - 6,020)	4,644 (946 - 6,020)	4,644 (946 - 6,020)
COP [1]	Nominal (Min - Max)	Energy Saving Classification	4.62 (5.24 - 4.19) A	4.62 (5.24 - 4.19) A	4.62 (4.61 - 4.19) A	4.62 (4.61 - 4.19) A
Power input Heating	Nominal (Min - Max)	kW	1.17 (0.21 - 1.67)	1.17 (0.21 - 1.67)	1.17 (0.21 - 1.67)	1.17 (0.21 - 1.67)
Annual Energy Consuption [2]		kWh	615	615	625	695
Indoor unit						
Air Volume	Cooling	m³/h	654	654 (E7) / 678 (E9)	654 (E7) / 750 (E12)	678
Moisture removal volume		l/h	1.3	1.3 (E7) / 1.6 (E9)	1.3 (E7) / 2.0 (E12)	1.6
Sound pressure Level [3]	Cooling (S-Lo)	dB(A)	20	20	20	20
	Heating (S-Lo)	dB(A)	22	22 (E7) / 23 (E9)	22 (E7) / 30 (E12)	24
Sound power Level	Cooling (Hi)	dB	53	53 (E7) / 55 (E9)	53 (E7) / 58 (E12)	55
	Heating (Hi)	dB	54	54 (E7) / 56 (E9)	54 (E7) / 58 (E12)	56
Dimensions	H x W x D	mm	290 x 870 x 204	290 x 870 x 204	290 x 870 x 204	290 x 870 x 204
Net weight		kg	9	9	9	9
Air purifier filter			Patrol + E-ion	Patrol + E-ion	Patrol + E-ion	Patrol + E-ion
Outdoor unit						
Power source		V	230	230	230	230
Connection		mm²	4 x 1.5	4 x 1.5	4 x 1.5	4 x 1.5
Current Cooling	Nominal	A	5.75	5.75	5.80	8.50
Current Heating	Nominal	A	5.20	5.20	5.20	6.05
Air Volume	Cooling / Heating	m³/h	1,998 / 1,710	1,998 / 1,710	1,998 / 1,710	1,998 / 1,710
Sound pressure Level [3]	Cooling / Heating (Hi)	dB(A)	47 / 49	47 / 49	47 / 49	47 / 49
Sound power Level	Cooling / Heating (Hi)	dB	62 / 64	62 / 64	62 / 64	62 / 64
Dimensions [4]	H x W x D	mm	540 x 780 (+70) x 289	540 x 780 (+70) x 289	540 x 780 (+70) x 289	540 x 780 (+70) x 289
Net weight		kg	38	38	38	38
Piping connections	Liquid pipe	inch (mm)	1/4" (6.35)	1/4" (6.35)	1/4" (6.35)	1/4" (6.35)
	Gaz pipe	inch (mm)	3/8" (9.52)	3/8" (9.52)	3/8" (9.52)	3/8" (9.52)
Refrigerent Loading	R410A	kg	1.45	1.45	1.45	1.45
Elevation difference (in/out) [5]	Max	m	10	10	10	10
Piping lenght (total)	Min / Max	m	3-30	3-30	3-30	3-30
Piping lenght (one unit)	Min / Max	m	3-20	3-20	3-20	3-20
Piping lenght without refegirent increase	Max	m	20	20	20	20
Additional gaz		g/m	20	20	20	20
Operating range, outdoor [3]	Cooling Min / Max	°c	16 / 43	16 / 43	16 / 43	16 / 43
	Heating Min / Max	°c	-15 / 24	-15 / 24	-15 / 24	-15 / 24

GLOBAL REMARKS	Rating conditions	Cooling	Heating
	Inside air temperature	27°C DB / 19°C WB	20°C DB
	Outside air temperature	35°C DB / 24°C WB	7°C DB / 6°C WB

DB : Dry buld; WB : Wet buld
These indoor/outdoor units are not suitable for Nordic countries No warranty can be applied if installed in Nordic countries

1) EER and COP classification is at 230V in accordance with EU directive 2002/31/EC.
2) The annual consumption is calculated by multiplying the input power at 230V by an avarage of 500 hours per year in cooling mode.
3) The Sound pressure level of the units shows the value measured of a position 1 meter in front of the main body and 0,8 meters below the unit. The sound pressure is measured in accordance with Eurovent 6/C/006-97 specification.
4) Add 70mm for piping port.
5) When installing the outdoor unit at a higher position than the indoor unit.

ETHEREA

NEW09

CS-XE7JKEW // CS-XE9JKEW // CS-XE12JKEW

TECHNICAL FOCUS

- VERY EXCLUSIVE SILVER DESIGN
- NEW GENERATION OF E-ION AIR PURIFYING SYSTEM WITH 24-HR PATROL SENSOR
- MORE EFFICIENT THAN EVER FOR LESS CONSUMPTION AND HIGHER SAVINGS
- SUPER QUIET! ONLY 20DB, EQUIVALENT TO NIGHTTIME IN THE COUNTRY
- MORE POWERFUL AIRFLOW TO QUICKLY REACH THE DESIRED TEMPERATURE

CS-E7JKEW // CS-E9JKEW // CS-E12JKEW

KIT-2XE77-JKE // KIT-2XE79-JKE // KIT-2XE712-JKE
KIT-2E77-JKE // KIT-2E79-JKE // KIT-2E712-JKE

HEALTHY AIR
- E-ion plus air purifying system
- Patrol sensor to detect and eliminate contaminants
- Air conditioner and purifier with simultaneous or independent operation

ENERGY EFFICIENCY AND ECOLOGY
- Maximum efficiency inverter system, for bigger savings
- R410A refrigerant gas

COMFORT
- Super Quiet mode (from 20dB)
- Powerful mode
- Uniform dispersion of airflow
- Automatic vertical airflow control
- Hot start mode, increased comfort on heat pump mode, no cool airflow when process starts
- Automatic restart after power cut

EASE OF USE
- 24-hr timer
- User friendly infrared remote control

EASY INSTALLATION AND MAINTENANCE
- Removable, washable panel
- 30 m maximum connection distance
- 10 m maximum elevation difference
- Maintenance access through the top panel of the outdoor unit
- Self-diagnosis function

CU-2E15GBE-1

ETHEREA MULTI SPLIT 2X1 // INVERTER +

ETHEREA, A NEW CONCEPT IN AIR CONDITIONERS: AIR PURIFYING SYSTEM, STYLISH DESIGN AND HIGH EFFICIENCY. WITH THE MULTI SYSTEM, SAVE MORE THAN WITH THE 1X1!

Cool and stylish, the distinctive, beautiful rounded form is designed to complement today's modern interiors. Etherea has an advanced air purifying system with the new Patrol Sensor to detect and eliminate contaminants. Using a Multi Split 2X1 Inverter+ system with the outdoor unit CU-2E18CBPG instead of 2 individual mono split inverter+ systems, you reduce consumption and thus save more! Up to 16%! Furthermore, using a Multi Split system, you save space on the outdoor unit, making it easier to install in small spaces.
The multi system also has a greater difference in elevation and longer tubing, leading to greater flexibility on roof installations.

ETHEREA MULTI SPLIT 2X1 // INVERTER +

Silver Kit			KIT-2XE99-JKE	KIT-2XE912-JKE	KIT-2XE1212-JKE
Indoor			CS-XE9JKXEW CS-XE9JKXEW	CS-XE9JKXEW CS-XE12JKXEW	CS-XE12JKXEW CS-XE12JKXEW
White Kit			KIT-2E99-JKE	KIT-2E912-JKE	KIT-2E1212-JKE
Indoor			CS-E9JKEW CS-E9JKEW	CS-E9JKEW CS-E12JKEW	CS-E12JKEW CS-E12JKEW
Outdoor			CU-2E18CBPG	CU-2E18CBPG	CU-2E18CBPG
Cooling capacity	Nominal (Min - Max)	kW	4.80 (1.50 - 5.20)	5.00 (1.50 - 5.30)	5.20 (1.50 - 5.40)
		kCal/h	4,128 (1,290 - 4,472)	4,300 (1,290 - 4,558)	4,472 (1,290 - 4,644)
EER [1]	Nominal (Min - Max)	Energy Saving Classification	3.66 (6.00 - 3.42) A	3.36 (6.00 - 3.44) A	3.42 (6.00 - 3.53) A
Power input Cooling	Nominal (Min - Max)	kW	1.31 (0.25 - 1.35)	1.49 (0.25 - 1.54)	1.52 (0.25 - 1.58)
Heating capacity	Nominal (Min - Max)	kW	5.60 (1.10 - 7.20)	5.60 (1.10 - 7.20)	5.60 (1.10 - 7.20)
		kCal/h	4,816 (946 - 6,192)	4,816 (946 - 6,192)	4,816 (946 - 6,192)
COP [1]	Nominal (Min - Max)	Energy Saving Classification	4.48 (4.4 - 4.14) A	4.55 (5.23 - 4.19) A	4.63 (5.23 - 4.23) A
Power input Heating	Nominal (Min - Max)	kW	1.25 (0.21 - 1.74)	1.23 (0.21 - 1.72)	1.21 (0.21 - 1.70)
Annual Energy Consumption [2]		kWh	655	745	760
Indoor unit					
Air Volume	Cooling	m³/h	678	678 (E9) / 750 (E12)	750
Moisture removal volume		l/h	1.6	1.6 (E9) / 2.0 (E12)	2.0
Sound pressure level [3]	Cooling (S-Lo)	dB(A)	20	20	20
	Heating (S-Lo)	dB(A)	24	24 (E9) / 30 (E12)	30
Sound power level	Cooling (Hi)	dB	55	55 (E9) / 53 (E12)	58
	Heating (Hi)	dB	56	56 (E9) / 53(E12)	58
Dimensions	H x W x D	mm	290 x 870 x 204	290 x 870 x 204	290 x 870 x 204
Net weight		kg	9	9	9
Air purifier filter			Patrol + E-ion	Patrol + E-ion	Patrol + E-ion
Outdoor unit					
Power source		V	230	230	230
Connection		mm²	4 x 1.5	4 x 1.5	4 x 1.5
Current Cooling	Cooling / Heating (Nominal)	A	6.10 / 5.55	6.95 / 5.45	7.10 / 5.35
Air Volume	Cooling / Heating	m³/h	2,070 / 1,860	2,070 / 1,860	2,070 / 1,860
Sound pressure level [3]	Cooling / Heating (Hi)	dB(A)	49 / 51	49 / 51	49 / 51
Sound power level	Cooling / Heating (Hi)	dB	64 / 66	64 / 66	64 / 66
Dimensions [4]	H x W x D	mm	540 x 780 (+70) x 289	540 x 780 (+70) x 289	540 x 780 (+70) x 289
Net weight		kg	38	38	38
Piping connections	Liquid pipe	inch (mm)	1/4" (6.35)	1/4" (6.35)	1/4" (6.35)
	Gas pipe	inch (mm)	3/8" (9.52)	3/8" (9.52)	3/8" (9.52)
Refrigerant Loading	R410A	kg	1.45	1.45	1.45
Elevation difference (in/out) [5]	Max	m	10	10	10
Piping length	Total	m	30	30	30
Piping length (one unit)	Min / Max	m	3 / 20	3 / 20	3 / 20
Piping length without refegirent increase	Max	m	20	20	20
Additional gas		g/m	20	20	20
Operating range, outdoor [3]	Cooling Min / Max	°c	16 / 43	16 / 43	16 / 43
	Heating Min / Max	°c	-15 / 24	-15 / 24	-15 / 24

GLOBAL REMARKS

Rating conditions	Cooling	Heating
Inside air temperature	27°C DB / 19°C WB	20°C DB
Outside air temperature	35°C DB / 24°C WB	7°C DB / 6°C WB

DB : Dry buld; WB : Wet buld
These indoor/outdoor units are not suitable for Nordic countries No warranty can be applied if installed in Nordic countries

1) EER and COP classification is at 230V in accordance with EU directive 2002/31/EC.
2) The annual consumption is calculated by multiplying the input power at 230V by an avarage of 500 hours per year in cooling mode.
3) The Sound pressure level of the units shows the value measured of a position 1 meter in front of the main body and 0,8 meters below the unit. The sound pressure is measured in accordance with Eurovent 6/C/006-97 specification.
4) Add 70mm for piping port.
5) When installing the outdoor unit at a higher position than the indoor unit.

ETHEREA

NEW09

CS-XE7JKEW // CS-XE9JKEW // CS-XE12JKEW

TECHNICAL FOCUS

- VERY EXCLUSIVE SILVER DESIGN
- NEW GENERATION OF E-ION AIR PURIFYING SYSTEM WITH 24-HR PATROL SENSOR
- MORE EFFICIENT THAN EVER FOR LESS CONSUMPTION AND HIGHER SAVINGS
- SUPER QUIET! ONLY 20DB, EQUIVALENT TO NIGHTTIME IN THE COUNTRY
- MORE POWERFUL AIRFLOW TO QUICKLY REACH THE DESIRED TEMPERATURE

CS-E7JKEW // CS-E9JKEW // CS-E12JKEW

KIT-2XE99-JKE // KIT-2XE912-JKE // KIT-2XE1212-JKE
KIT-2E99-JKE // KIT-2E912-JKE // KIT-2E1212-JKE

HEALTHY AIR
- E-ion plus air purifying system
- Patrol sensor to detect and eliminate contaminants
- Air conditioner and purifier with simultaneous or independent operation

ENERGY EFFICIENCY AND ECOLOGY
- Maximum efficiency inverter system, for bigger savings
- R410A refrigerant gas

COMFORT
- Super Quiet mode (from 20dB)
- Powerful mode
- Uniform dispersion of airflow
- Automatic vertical airflow control
- Hot start mode, increased comfort on heat pump mode, no cool airflow when process starts
- Automatic restart after power cut

EASE OF USE
- 24-hr timer
- User friendly infrared remote control

EASY INSTALLATION AND MAINTENANCE
- Removable, washable panel
- 30 m maximum connection distance
- 10 m maximum elevation difference
- Maintenance access through the top panel of the outdoor unit
- Self-diagnosis function

CU-2E18CBPG

ETHEREA MULTI SPLIT 3X1 // INVERTER +

ETHEREA, A NEW CONCEPT IN AIR CONDITIONERS: AIR PURIFYING SYSTEM, STYLISH DESIGN AND HIGH EFFICIENCY. WITH THE MULTI SYSTEM, SAVE MORE THAN WITH THE 1X1!

Cool and stylish, the distinctive, beautiful rounded form is designed to complement today's modern interiors. Etherea has an advanced air purifying system with the new Patrol Sensor to detect and eliminate contaminants. Using a Multi Split 3X1 Inverter+ system with the outdoor unit CU-3E18JBE instead of 3 individual mono split inverter+ systems, you reduce consumption and thus save more! Up to 34%! Furthermore, using a Multi Split system, you save space on the outdoor unit, making it easier to install in small spaces.
The multi system also has a greater difference in elevation and longer tubing, leading to greater flexibility on roof installations.

FOR XE7, E7, XE12 AND E12

ETHEREA MULTI SPLIT 3X1 // INVERTER +

Silver Kit			KIT-3XE7712-JBE	KIT-3XE7715-JBE	KIT-3XE7712-JKE	KIT-3XE7715-JKE
Indoor			CS-XE7JKEW (x2) CS-XE12JKEW (x1)	CS-XE7JKEW (x2) CS-XE15JKEW (x1)	CS-XE7JKEW (x2) CS-XE12JKEW (x1)	CS-XE7JKEW (x2) CS-XE15JKEW (x1)
White Kit			KIT-3E7712-JBE	KIT-3E7715-JBE	KIT-3E7712-JKE	KIT-3E7715-JKE
Indoor			CS-E7JKEW (x2) CS-E12JKEW (x1)	CS-E7JKEW (x2) CS-E15JKEW (x1)	CS-E7JKEW (x2) CS-E12JKEW (x1)	CS-E7JKEW (x2) CS-E15JKEW (x1)
Outdoor			CU-3E18JBE	CU-3E18JBE	CU-3E23CBPG	CU-3E23CBPG
Cooling capacity	Nominal (Min - Max)	kW	5.20 (1.90-7.20)	5.20 (1.80-7.20)	6.80 (2.50 - 8.10)	6.80 (2.60 - 8.20)
	Nominal (Min - Max)	kCal/h	4,472 (1,634-6,192)	4,472 (1,548-6,192)	5,848 (2,150 - 6,966)	5,848 (2,236 - 7,052)
EER [1]	Nominal (Min - Max)	Energy Saving Classification	4.29 (5.27 - 3.30) A	4.29 (5.00 - 3.30) A	3.42 (5.43 - 2.90) A	3.45 (5.6 - 2.94) A
Power input Cooling	Nominal (Min - Max)	kW	1,21 (0,36-2,18)	1,21 (0,36-2,18)	1.99 (0.46 - 2.79)	1.97 (0.46 - 2.79)
Heating capacity	Nominal (Min - Max)	kW	6.80 (1.40-8.30)	6.80 (1.60-8.30)	8.60 (3.20 - 9.00)	8.60 (3.20 - 8.80)
	Nominal (Min - Max)	kCal/h	5,848 (1,204-7,138)	5,848 (1,376-7,138)	7,396 (2,752 - 7,740)	7,396 (2,752 - 7,568)
COP [1]	Nominal (Min - Max)	Energy Saving Classification	4.63 (4.37 - 3.93) A	4.63 (5.00 - 3.93) A	4.39 (6.27 - 3.24) A	4.43 (6.25 - 3.19) A
Power input Heating	Nominal (Min - Max)	kW	1.47 (0.32-2.11)	1.44 (0.32-2.11)	1.96 (0.51 - 2.78)	1.94 (0.51 - 2.76)
Annual Energy Consuption [2]		kWh	605	605	995	985
Indoor unit						
Air Volume	Cooling	m³/h	606 (E7) / 654 (E12)	606 (E7) / 672 (E15)	654 (E7) / 750 (E12)	654 (E7) / 750 (E15)
Moisture removal volume		l/h	1.4 (E7) / 2.0 (E12)	1.4 (E7) / 2.4 (E15)	1.3 (E7) / 2.0 (E12)	1.3 (E7) / 2.4 (E15)
Sound pressure Level [3]	Cooling (S-Lo)	dB(A)	20	20 (E7) / 29 (E15)	20	20 (E7) / 29 (E15)
	Heating (S-Lo)	dB(A)	22 (E7) / 30 (E12)	22 (E7) / 32 (E15)	22 (E7) / 30 (E12)	22 (E7) / 32 (E15)
Sound power Level	Cooling (Hi)	dB	53 (E7) / 58 (E12)	53 (E7) / 59 (E15)	53 (E7) / 58 (E12)	53 (E7) / 59 (E15)
	Heating (Hi)	dB	54 (E7) / 58 (E12)	54 (E7) / 59 (E12)	54 (E7) / 58 (E12)	54 (E7) / 59 (E12)
Dimensions	H x W x D	mm	290 x 870 x 204	290 x 870 x 204	290 x 870 x 204	290 x 870 x 204
Net weight		kg	9	9	9	9
Air purifier filter			Patrol + E-ion	Patrol + E-ion	Patrol + E-ion	Patrol + E-ion
Outdoor unit						
Power source		V	230	230	230	230
Connection		mm²	4 x 1.5	4 x 1.5	4 x 1.5	4 x 1.5
Current Cooling	Nominal	A	5.3	5.3	8.80	8.60
Current Heating	Nominal	A	6.5	6.4	8.60	8.50
Air Volume	Cooling / Heating	m³/h	2,502	2,502	1,998 / 1,710	1,998 / 1,710
Sound pressure Level [3]	Cooling / Heating (Hi)	dB(A)	46 / 47	46 / 47	46 / 47	46 / 47
Sound power Level	Cooling / Heating (Hi)	dB	59 / 61	59 / 61	59 / 60	59 / 60
Dimensions [4]	H x W x D	mm	795 x 875 (+70) x 320	795 x 875 (+70) x 320	735 x 826 (+110) x 300	735 x 826 (+110) x 300
Net weight		kg	65	65	57	57
Piping connections	Liquid pipe	inch (mm)	1/4" (6.35)	1/4" (6.35)	1/4" (6.35)	1/4" (6.35)
	Gaz pipe	inch (mm)	3/8" (9.52)	3/8" (9.52)	3/8" (9.52)	3/8" (9.52)
Refrigerent Loading	R410A	kg	2.64	2.64	2.64	2.64
Elevation difference (in/out) [5]	Max	m	15	15	15	15
Piping lenght (total)	Min / Max	m	3-50	3-50	3-50	3-50
Piping lenght (one unit)	Min / Max	m	3-25	3-25	3-25	3-25
Piping lenght without refegirent increase	Max	m	30	30	30	30
Additional gaz		g/m	20	20	20	20
Operating range, outdoor [3]	Cooling Min / Max	°c	-10 / 46	-10 / 46	16 / 43	16 / 43
	Heating Min / Max	°c	-15 / 24	-15 / 24	-15 / 24	-15 / 24

GLOBAL REMARKS	Rating conditions	Cooling	Heating
	Inside air temperature	27°C DB / 19°C WB	20°C DB
	Outside air temperature	35°C DB / 24°C WB	7°C DB / 6°C WB

DB : Dry buld; WB : Wet buld
These indoor/outdoor units are not suitable for Nordic countries No warranty can be applied if installed in Nordic countries

1) EER and COP classification is at 230V in accordance with EU directive 2002/31/EC.
2) The annual consumption is calculated by multiplying the input power at 230V by an avarage of 500 hours per year in cooling mode.
3) The Sound pressure level of the units shows the value measured of a position 1 meter in front of the main body and 0,8 meters below the unit. The sound pressure is measured in accordance with Eurovent 6/C/006-97 specification.
4) Add 110mm for piping port.
5) When installing the outdoor unit at a higher position than the indoor unit.

ETHEREA

NEW09

CS-XE7JKEW // CS-XE9JKEW // CS-XE12JKEW // CS-XE15JKEW

TECHNICAL FOCUS

- VERY EXCLUSIVE SILVER DESIGN
- NEW GENERATION OF E-ION AIR PURIFYING SYSTEM WITH 24-HR PATROL SENSOR
- MORE EFFICIENT THAN EVER FOR LESS CONSUMPTION AND HIGHER SAVINGS
- SUPER QUIET! ONLY 20DB, EQUIVALENT TO NIGHTTIME IN THE COUNTRY
- MORE POWERFUL AIRFLOW TO QUICKLY REACH THE DESIRED TEMPERATURE

CS-E7JKEW // CS-E9JKEW // CS-E12JKEW

KIT-3XE7712-JKE // KIT-3XE7715-JKE
KIT-3E7712-JKE // KIT-3E7715-JKE

HEALTHY AIR
- E-ion plus air purifying system
- Patrol sensor to detect and eliminate contaminants
- Air conditioner and purifier with simultaneous or independent operation

ENERGY EFFICIENCY AND ECOLOGY
- Maximum efficiency inverter system, for bigger savings
- R410A refrigerant gas

COMFORT
- Super Quiet mode (from 20dB)
- Powerful mode
- Uniform dispersion of airflow
- Automatic vertical airflow control
- Hot start mode, increased comfort on heat pump mode, no cool airflow when process starts
- Automatic restart after power cut

EASE OF USE
- 24-hr timer
- User friendly infrared remote control

EASY INSTALLATION AND MAINTENANCE
- Removable, washable panel
- 50 m maximum connection distance
- 10 m maximum elevation difference
- Maintenance access through the top panel of the outdoor unit
- Self-diagnosis function

CU-3E18JBE

CU-3E23CBPG

ETHEREA MULTI SPLIT 4X1 // INVERTER +

ETHEREA, A NEW CONCEPT IN AIR CONDITIONERS: AIR PURIFYING SYSTEM, STYLISH DESIGN AND HIGH EFFICIENCY. WITH THE MULTI SYSTEM, SAVE MORE THAN WITH THE 1X1!

Cool and stylish, the distinctive, beautiful rounded form is designed to complement today's modern interiors. Etherea has an advanced air purifying system with the new Patrol Sensor to detect and eliminate contaminants. Using a Multi Split 4X1 Inverter+ system with the outdoor unit CU-4E23JBE instead of 4 individual mono split inverter+ systems, you reduce consumption and thus save more! Up to 36%! Furthermore, using a Multi Split system, you save space on the outdoor unit, making it easier to install in small spaces.
The multi system also has a greater difference in elevation and longer tubing, leading to greater flexibility on roof installations.

FOR XE7, E7, XE12 AND E12

ETHEREA MULTI SPLIT 4X1 // INVERTER +

Silver Kit			KIT-4XE77712-JBE	KIT-4XE77715-JBE	KIT-4XE77712-JKE	KIT-4XE77715-JKE
Indoor			CS-XE7JKEW (x3) CS-XE12JKEW (x1)	CS-XE7JKEW (x3) CS-XE15JKEW (x1)	CS-XE7JKEW (x3) CS-XE12JKEW (x1)	CS-XE7JKEW (x3) CS-XE15JKEW (x1)
White Kit			KIT-4E77712-JBE	KIT-4E77715-JBE	KIT-4E77712-JKE	KIT-4E77715-JKE
Indoor			CS-E7JKEW (x3) CS-E12JKEW (x1)	CS-E7JKEW (x3) CS-E15JKEW (x1)	CS-E7JKEW (x3) CS-E12JKEW (x1)	CS-E7JKEW (x3) CS-E15JKEW (x1)
Outdoor			CU-4E23JBE	CU-4E23JBE	CU-4E27CBPG	CU-4E27CBPG
Cooling capacity	Nominal (Min - Max)	kW	6.80 (1.90 - 8.80)	6.80 (1.90 - 8.80)	8.00 (2.80 - 8.90)	8.00 (2.80 - 8.90)
		kCal/h	5,848 (1,634 - 7,568)	5,848 (1,634 - 7,568)	6,880 (2,408 - 7,654)	6,880 (2,408 - 7,654)
EER [1]	Nominal (Min - Max)	Energy Saving Classification	4.15 (5.58 - 3.56) A	4.15 (5.58 - 3.56) A	3.76 (5.71 - 3.09) A	3.76 (5.71 - 3.20) A
Power input Cooling	Nominal (Min - Max)	kW	1,65 (0,34 - 2,47)	1,65 (0,34 - 2,47)	2.13 (0.49 - 2.88)	2.13 (0.49 - 2.78)
Heating capacity	Nominal (Min - Max)	kW	8.60 (3.00 - 10.60)	8.60 (3.00 - 10.60)	9.40 (3.40 - 10.50)	9.40 (3.40 - 10.50)
		kCal/h	7,396 (2,580 - 9,116)	7,396 (2,580 - 9,116)	8,084 (2,924 - 9,030)	8,084 (2,924 - 9,030)
COP [1]	Nominal (Min - Max)	Energy Saving Classification	4.65 (5.17 - 4.08) A	4.65 (5.17 - 4.09) A	4.43 (5.76 - 3.30) A	4.50 (5.31 - 3.34) A
Power input Heating	Nominal (Min - Max)	kW	1.85 (0.58 - 2.60)	1.85 (0.58 - 2.59)	2.12 (0.59 - 3.18)	2.09 (0.64 - 3.14)
Annual Energy Consumption [2]		kWh	775	775	1,065	1,055
Indoor unit						
Air Volume	Cooling	m³/h	606 (E7) / 654 (E12)	606 (E7) / 672 (E15)	654 (E7) / 750 (E12)	654 (E7) / 750 (E15)
Moisture removal volume		l/h	1.4 (E7) / 2.0 (E12)	1.4 (E7) / 2.4 (E15)	1.3 (E7) / 2.0 (E12)	1.3 (E7) / 2.4 (E15)
Sound pressure level [3]	Cooling (S-Lo)	dB(A)	20	20 (E7) / 29 (E15)	20	20 (E7) / 29 (E15)
	Heating (S-Lo)	dB(A)	22 (E7) / 30 (E12)	22 (E7) / 32 (E15)	22 (E7) / 30 (E12)	22 (E7) / 32 (E15)
Sound power level	Cooling (Hi)	dB	53 (E7) / 58 (E12)	53 (E7) / 59 (E15)	53 (E7) / 58 (E12)	53 (E7) / 59 (E15)
	Heating (Hi)	dB	54 (E7) / 58 (E12)	54 (E7) / 59 (E12)	54 (E7) / 58 (E12)	54 (E7) / 59 (E12)
Dimensions	H x W x D	mm	290 x 870 x 204	290 x 870 x 204	290 x 870 x 204	290 x 870 x 204
Net weight		kg	9	9	9	9
Air purifier filter			Patrol + E-ion	Patrol + E-ion	Patrol + E-ion	Patrol + E-ion
Outdoor unit						
Power source		V	230	230	230	230
Connection		mm²	4 x 1.5	4 x 1.5	4 x 1.5	4 x 1.5
Current Cooling	Cooling / Heating (Nominal)	A	7.40 / 7.40	8.60 / 8.50	9.40 / 9.30	9.30 / 9.20
Air Volume	Cooling / Heating	m³/h	2,550	2,550	2,910	2,910
Sound pressure level [3]	Cooling / Heating (Hi)	dB(A)	48 / 49	48 / 49	48 / 49	48 / 49
Sound power level	Cooling / Heating (Hi)	dB	62 / 63	62 / 63	61 / 62	61 / 62
Dimensions [4]	H x W x D	mm	795 x 875 (+70) x 320	795 x 875 (+70) x 320	908 x 900 x 320	908 x 900 x 320
Net weight		kg	65	65	73	73
Piping connections	Liquid pipe	inch (mm)	1/4" (6.35)	1/4" (6.35)	1/4" (6.35)	1/4" (6.35)
	Gas pipe	inch (mm)	3/8" (9.52)	3/8" (9.52)	3/8" (9.52)	3/8" (9.52)
Refrigerant Loading	R410A	kg	2.64	2.64	3.10	3.10
Elevation difference (in/out) [5]	Max	m	15	15	15	15
Piping length	Total	m	70	70	70	70
Piping length (one unit)	Min / Max	m	3 / 25	3 / 25	3 / 25	3 / 25
Piping length without refegirent increase	Max	m	40	40	40	40
Additional gas		g/m	20	20	20	20
Operating range, outdoor [3]	Cooling Min / Max	°c	-10 / 46	-10 / 46	16 / 43	16 / 43
	Heating Min / Max	°c	-15 / 24	-15 / 24	-15 / 24	-15 / 24

GLOBAL REMARKS

Rating conditions	Cooling	Heating
Inside air temperature	27°C DB / 19°C WB	20°C DB
Outside air temperature	35°C DB / 24°C WB	7°C DB / 6°C WB

DB : Dry buld; WB : Wet buld
These indoor/outdoor units are not suitable for Nordic countries No warranty can be applied if installed in Nordic countries

1) EER and COP classification is at 230V in accordance with EU directive 2002/31/EC.
2) The annual consumption is calculated by multiplying the input power at 230V by an avarage of 500 hours per year in cooling mode.
3) The Sound pressure level of the units shows the value measured of a position 1 meter in front of the main body and 0,8 meters below the unit. The sound pressure is measured in accordance with Eurovent 6/C/006-97 specification.
4) Add 70mm for piping port.
5) When installing the outdoor unit at a higher position than the indoor unit.

ETHEREA

NEW09

CS-XE7JKEW // CS-XE9JKEW // CS-XE12JKEW // CS-XE15JKEW

TECHNICAL FOCUS

- VERY EXCLUSIVE SILVER DESIGN
- NEW GENERATION OF E-ION AIR PURIFYING SYSTEM WITH 24-HR PATROL SENSOR
- MORE EFFICIENT THAN EVER FOR LESS CONSUMPTION AND HIGHER SAVINGS
- SUPER QUIET! ONLY 20DB, EQUIVALENT TO NIGHTTIME IN THE COUNTRY
- MORE POWERFUL AIRFLOW TO QUICKLY REACH THE DESIRED TEMPERATURE

CS-E7JKEW // CS-E9JKEW // CS-E12JKEW

KIT-4XE77712-JBE // KIT-4XE77715-JBE // KIT-4XE77712-JKE // KIT-4XE77715-JKE KIT-4E77712-JBE // KIT-4E77715-JBE // KIT-4E77712-JKE // KIT-4E77715-JKE

HEALTHY AIR
- E-ion plus air purifying system
- Patrol sensor to detect and eliminate contaminants
- Air conditioner and purifier with simultaneous or independent operation

ENERGY EFFICIENCY AND ECOLOGY
- Maximum efficiency inverter system, for bigger savings
- R410A refrigerant gas

COMFORT
- Super Quiet mode (from 20dB)
- Powerful mode
- Uniform dispersion of airflow
- Automatic vertical airflow control
- Hot start mode, increased comfort on heat pump mode, no cool airflow when process starts
- Automatic restart after power cut

EASE OF USE
- 24-hr timer
- User friendly infrared remote control

EASY INSTALLATION AND MAINTENANCE
- Removable, washable panel
- 70 m maximum connection distance
- 15 m maximum elevation difference
- Maintenance access through the top panel of the outdoor unit
- Self-diagnosis function

CU-4E23JBE

CU-4E27CBPG

FREE MULTI

UP TO 4 INDOOR UNITS WITH A SINGLE OUTDOOR UNIT

Up to four different rooms with a single outdoor unit. Free Multi is what we need.
With Free Multi you can take care of 2, 3 or 4 rooms with a single outdoor unit.
With the Free Multi range, your clients will be able to save space at the time of installing the outdoor unit, and they will have more energy efficiency than with various 1x1 systems. They will be able to save up to 30% of energy.
Choose the outdoor units according to the necessities of each of your client's rooms, and calculate which outdoor unit best adapts itself to the combinations of indoor combinations.
The combination table P57, 58, 59 will help you to select the best option.

INDOOR UNIT CAPACITIES

CAPACITY	7 - 2.2kW	9/10 - 2.8kW	12 - 3.2kW	15 - 4kW	18 - 5kW	21 - 6kW
SPLIT INVERTER +	CS-E7HKEW	CS-E9HKEW	CS-E12HKEW	CS-E15HKEW	CS-E18HKEW [1]	
SPLIT ETHEREA SILVER OR WHITE INVERTER +	CS-XE7JKEW CS-E7JKEW	CS-XE9JKEW CS-E9JKEW	CS-XE12JKEW CS-E12JKEW	CS-XE15JKEW CS-E15JKEW	CS-XE18JKEW [1] CS-E18JKEW [1]	CS-XE21JKEW [1] CS-E21JKEW [1]
LOW STATIC PRESSURE HIDE AWAY INVERTER +		CS-E10JD3EA		CS-E15JD3EA	CS-E18JD3EA [1]	
4 WAY 60X60 CASSETTE INVERTER +		CS-E10HB4EA		CS-E15HB4EA	CS-E18HB4EA [1]	CS-E21JB4EA [1]
1-WAY CASSETTE INVERTER +	CS-ME7EBE1E	CS-ME10EBE1E	CS-ME12EBE1E	CS-ME14EBE1E		
FLOOR CONSOLE INVERTER +		CS-E9GFEW [2]	CS-E12GFEW [2]		CS-E18GFEW [1] [2]	
FLOOR/CEILING CONSOLE INVERTER +		CS-ME10DTEG		CS-E15DTEW	CS-E18DTEW [1]	

1) A CZ-MA2P pipe reducer is needed.
2) Floor console is not compatible with CU-2E18CBPG.

POSSIBLE INDOOR UNIT COMBINATIONS

Models		Possible indoor unit combinations	Capacity kW [1]	Refrigerant pipe diameter			Pipe length						Indoor/outdoor unit combinations					
				Indoor unit	Liquid	Gas	Maximum pipe length (1 room)	Maximum pipe length (total)	Max pipe without additional gas refills	Additional gas	Maximum level difference	Capacity	Split	Floor console	4-way Cassette	1-way Cassette	Floor / ceiling	Ducts
2 Rooms	CU-2E15GBE-1	A [2]: 7 o 9/10 o 12	4.4-5.0	Room A	1/4"	3/8"	20 m	30 m	20 m	20 g/m	10 m	7	✘					
		B [2]: 7 o 9/10 o 12		Room B	1/4"	3/8"												
												9/10	✘	✘				✘
												12	✘	✘				
	CU-2E18CBPG	A [2]: 7 o 9/10 o 12	4.4-6.4	Room A	1/4"	3/8"	20 m	30 m	20 m	20 g/m	10 m	7	✘					
		B [2]: 7 o 9/10 o 12		Room B	1/4"	3/8"												
												9/10	✘				✘	✘
												12	✘					
3 Rooms	CU-3E18JBE	A [3]: 7 o 9/10 o 12 o 15 o 18	5.0-9.0	Room A	1/4"	3/8"	25 m	50 m	30 m	20 g/m	10 m	7	✘			✘		
		B [3]: 7 o 9/10 o 12 o 15 o 18		Room B	1/4"	3/8"						9/10	✘	✘	✘	✘	✘	✘
		C [3]: 7 o 9/10 o 12 o 15 o 18		Room C	1/4"	3/8"						12	✘	✘		✘		
												15	✘		✘	✘	✘	✘
												18	✘	✘	✘		✘	✘
	CU-3E23CBPG	A [3]: 7 o 9/10 o 12 o 15 o 18	5.0-10.0	Room A	1/4"	3/8"	25 m	50 m	30 m	20 g/m	15 m	7	✘			✘		
		B [3]: 7 o 9/10 o 12 o 15 o 18		Room B	1/4"	3/8"						9/10	✘	✘	✘	✘	✘	✘
		C [3]: 7 o 9/10 o 12 o 15 o 18		Room C	1/4"	3/8"						12	✘	✘		✘		
												15	✘		✘	✘	✘	✘
												18	✘	✘	✘	✘	✘	✘
4 Rooms	CU-4E23JBE	A [3]: 7 o 9/10 o 12 o 15 o 18 o 21	5.0-11.0	Room A	1/4"	3/8"	25 m	70 m	40 m	20 g/m	15 m	7	✘			✘		
		B [3]: 7 o 9/10 o 12 o 15 o 18 o 21		Room B	1/4"	3/8"						9/10	✘	✘	✘	✘	✘	✘
		C [3]: 7 o 9/10 o 12 o 15 o 18 o 21		Room C	1/4"	3/8"						12	✘	✘		✘		
		D [3]: 7 o 9/10 o 12 o 15 o 18 o 21		Room D	1/4"	3/8"						15	✘		✘	✘	✘	✘
												18	✘	✘	✘	✘	✘	✘
												21	✘		✘			
	CU-4E27CBPG	A [3]: 7 o 9/10 o 12 o 15 o 18	5.0-13.6	Room A	1/4"	3/8"	25 m	70 m	40 m	20 g/m	15 m	7	✘			✘		
		B [3]: 7 o 9/10 o 12 o 15 o 18		Room B	1/4"	3/8"						9/10	✘	✘	✘	✘	✘	✘
		C [3]: 7 o 9/10 o 12 o 15 o 18		Room C	1/4"	3/8"						12	✘	✘		✘		
		D [3]: 7 o 9/10 o 12 o 15 o 18		Room D	1/4"	3/8"						15	✘		✘	✘	✘	✘
												18	✘	✘	✘		✘	✘

1) The combinations must remain within this range.
2) A minimum of two indoor units must be connected.
3) A minimum of two units connected, minimum combination at 2x1: 7+9

INDOOR UNITS FOR FREE MULTI COMBINATIONS

ETHEREA // SILVER // INVERTER +			2.2 kW	2.8 kW	3.2 kW	4 kW	5 kW	6 kW
Indoor			CS-XE7JKEW	CS-XE9JKEW	CS-XE12JKEW	CS-XE15JKEW	CS-XE18JKEW [1]	CS-XE21JKEW [1]
Cooling capacity	Nominal	kW / kCal/h	2.05 / 1,760	2.50 / 2,150	3.50 / 3,010	4.20 / 3,610	5.00 / 4,300	6.30 / 5,420
Heating capacity	Nominal	kW / kCal/h	2.80 / 2,410	3.40 / 2,920	4.40 / 3,780	5.40 / 4,640	5.80 / 4,990	7.20 / 6,190
Connection		mm²	4 x 1.5	4 x 1.5	4 x 1.5	4 x 1.5	4 x 1.5	4 x 1.5
Sound pressure level [2]	Cooling (Hi / Lo / S-Lo)	dB(A)	37 / 24 / 20	39 / 25 / 20	42 / 28 / 20	43 / 32 / 29	44 / 37 / 34	45 / 37 / 34
	Heating (Hi / Lo / S-Lo)	dB(A)	38 / 25 / 22	40 / 27 / 24	42 / 33 / 30	43 / 35 / 32	44 / 37 / 34	45 / 37/ 34
Sound power level	Cooling / Heating (Hi)	dB	53 / 54	55 / 56	58 / 58	59 / 59	60 / 60	61 / 61
Dimensions	H x W x D	mm	290 x 870 x 204	290 x 870 x 204	290 x 870 x 204	290 x 870 x 204	290 x 1,070 x 235	290 x 1,070 x 235
Net weight		kg	9	9	9	9	12	12
Air purifier filter			Patrol + E-ion	Patrol + E-ion	Patrol + E-ion	Patrol + E-ion	Patrol + E-ion	Patrol + E-ion
Piping connections	Liquid pipe	inch (mm)	1/4" (6.35)	1/4" (6.35)	1/4" (6.35)	1/4" (6.35)	1/4" (6.35)	1/4" (6.35)
	Gas pipe	inch (mm)	3/8" (9.52)	3/8" (9.52)	3/8" (9.52)	1/2" (12.70)	1/2" (12.70)	1/2" (12.70)

ETHEREA // WHITE // INVERTER +			2.2 kW	2.8 kW	3.2 kW	4 kW	5 kW	6 kW
White Indoor			CS-E7JKEW	CS-E9JKEW	CS-E12JKEW	CS-E15JKEW	CS-E18JKEW [1]	CS-E21JKEW [1]
Cooling capacity	Nominal	kW / kCal/h	2.05 / 1,760	2.50 / 2,150	3.50 / 3,010	4.20 / 3,610	5.00 / 4,300	6.30 / 5,420
Heating capacity	Nominal	kW / kCal/h	2.80 / 2,410	3.40 / 2,920	4.40 / 3,780	5.40 / 4,640	5.80 / 4,990	7.20 / 6,190
Connection		mm²	4 x 1.5	4 x 1.5	4 x 1.5	4 x 1.5	4 x 1.5	4 x 1.5
Sound pressure level [2]	Cooling (Hi / Lo / S-Lo)	dB(A)	37 / 24 / 20	39 / 25 / 20	42 / 28 / 20	43 / 32 / 29	44 / 37 / 34	45 / 37 / 34
	Heating (Hi / Lo / S-Lo)	dB(A)	38 / 25 / 22	40 / 27 / 24	42 / 33 / 30	43 / 35 / 32	44 / 37 / 34	45 / 37/ 34
Sound power level	Cooling / Heating (Hi)	dB	53 / 54	55 / 56	58 / 58	59 / 59	60 / 60	61 / 61
Dimensions	H x W x D	mm	290 x 870 x 204	290 x 870 x 204	290 x 870 x 204	290 x 870 x 204	290 x 1,070 x 235	290 x 1,070 x 235
Net weight		kg	9	9	9	9	12	12
Air purifier filter			Patrol + E-ion	Patrol + E-ion	Patrol + E-ion	Patrol + E-ion	Patrol + E-ion	Patrol + E-ion
Piping connections	Liquid pipe	inch (mm)	1/4" (6.35)	1/4" (6.35)	1/4" (6.35)	1/4" (6.35)	1/4" (6.35)	1/4" (6.35)
	Gas pipe	inch (mm)	3/8" (9.52)	3/8" (9.52)	3/8" (9.52)	1/2" (12.70)	1/2" (12.70)	1/2" (12.70)

SPLIT // INVERTER +			2.2 kW	2.8 kW	3.2 kW	4 kW	5 kW
Indoor			CS-E7HKEW	CS-E9HKEW	CS-E12HKEW	CS-E15HKEW	CS-E18HKEW [1]
Cooling capacity	Nominal	kW / Kcal/h	2.20 / 1,892	2.80 / 2,408	3.20 / 2,752	4.00 / 3,440	5.00 / 4,300
Heating capacity	Nominal	kW / Kcal/h	3.20 / 2,752	4.00 / 3,440	4.50 / 3,870	5.60 / 4,816	7.10 / 6,106
Connection		mm²	4 x 1.5	4 x 1.5	4 x 1.5	4 x 1.5	4 x 1.5
Sound pressure level [2]	Cooling (Hi / Lo / S-Lo)	dB(A)	37 / 24 / 20	39 / 25 / 20	42 / 28 / 20	43 / 32 / 29	44 / 37 / 34	45 / 37 / 34
	Heating (Hi / Lo / S-Lo)	dB(A)	38 / 25 / 22	40 / 27 / 24	42 / 33 / 30	43 / 35 / 32	44 / 37 / 34	45 / 37/ 34
Sound power level	Cooling / Heating (Hi)	dB	53 / 54	55 / 56	58 / 58	59 / 59	60 / 60	61 / 61
Dimensions	H x W x D	mm	280 x 799 x 183	280 x 799 x 183	280 x 799 x 183	280 x 799 x 184	275 x 998 x 230
Net weight		Kg	9	9	9	9	11
Piping connections	Liquid pipe	inch (mm)	1/4" (6.35)	1/4" (6.35)	1/4" (6.35)	1/4" (6.35)	1/4" (6.35)	1/4" (6.35)
	Gas pipe	inch (mm)	3/8" (9.52)	3/8" (9.52)	3/8" (9.52)	1/2" (12.70)	1/2" (12.70)	1/2" (12.70)

OPTIONAL

LOW STATIC PRESSURE HIDE AWAY // INVERTER + (Available in September 09)			2.8 kW	4 kW	5 kW
Indoor hide away			CS-E10JD3EA	CS-E15JD3EA	CS-E18JD3EA [1]
Wired remote control	Include on the indoor unit		CZ-RD52CP	CZ-RD52CP	CZ-RD52CP
Cooling capacity	Nominal	kW / kCal/h	2.50 / 2,150	4.10 / 3,530	5.10 / 4,390
Heating capacity	Nominal	kW / kCal/h	3.20 / 2,752	4.80 / 4,130	6.10 / 5,250
Connection		mm²	4 x 1.5	4 x 1.5	4 x 1.5
External static pressure	High / Medium / Low	mmAq	2.55 / 1.5 / 1	2.55 / 1.5 / 1	2.55 / 1.5 / 1
Air Volume	High / Medium / Low	m³/h	414 / 402 / 330	474 / 402 / 330	624 / 528 / 444
Sound pressure level [2]	Cooling (Hi / Lo)	dB(A)	33 / 24	33 / 24	41 / 27
	Heating (Hi / Lo)	dB(A)	35 / 25	35 / 25	41 / 29
Sound power level	Cooling / Heating (Hi)	dB	49 / 51	49 / 51	57 / 57
Dimensions [4]	H x W x D	mm	235 x 750 (+65) x 370	235 x 750 (+65) x 370	285 x 750 (+65) x 370
Net weight		kg	17	18	18
Piping connections	Liquid pipe	inch (mm)	1/4" (6.35)	1/4" (6.35)	1/4" (6.35)
	Gas pipe	inch (mm)	3/8" (9.52)	1/2" (12.70)	1/2" (12.70)

OPTIONAL

4 WAY 60X60 CASSETTE // INVERTER +			2.8 kW	4 kW	5 kW	6 kW
Indoor			CS-E10HB4EA	CS-E15HB4EA	CS-E18HB4EA [1]	CS-E21JB4EA [1]
Panel	Sold separately		CZ-BT20E	CZ-BT20E	CZ-BT20E	CZ-BT20E
Wireless control	Include on the indoor unit					
Cooling capacity	Nominal	kW / kCal/h	2.50 / 2,150	4.10 / 3,530	4.8 / 4,130	5.9 / 5,070
Heating capacity	Nominal	kW / kCal/h	3.20 / 2,752	5.10 / 4,390	5.60 / 4,820	7.00 / 6,020
Connection		mm^2	4 x 1.5	4 x 1.5	4 x 1.5	4 x 1.5
Sound pressure level [2]	Cooling (Hi / Lo / S-Lo)	dB(A)	34 / 26 / 23	34 / 26 / 23	36 / 28 / 25	41 / 33 / 30
	Heating (Hi / Lo / S-Lo)	dB(A)	35 / 28 / 25	35 / 28 / 25	37 / 29 / 26	42 / 34 / 31
Sound power level	Cooling / Heating (Hi)	dB	47 / 58	47 / 48	49 / 50	54 / 55
Dimensions	Indoor (H x W x D)	mm	260 x 575 x 575	260 x 575 x 575	260 x 575 x 575	260 x 575 x 575
Dimensions	Panel (H x W x D)	mm	51 x 700 x 700	51 x 700 x 700	51 x 700 x 700	51 x 700 x 700
Net weight	Indoor (Panel)	kg	18 (2.5)	18 (2.5)	18 (2.5)	18 (2.5)
Air purifier filter	Optional		CZ-SA11P	CZ-SA11P	CZ-SA11P	CZ-SA11P
Piping connections	Liquid / Gas pipe	inch (mm)	1/4" (6.35) / 3/8" (9.52)	1/4" (6.35) / 1/2" (12.70)	1/4" (6.35) / 1/2" (12.70)	1/4" (6.35) / 1/2" (12.70)

OPTIONAL

1-WAY CASSETTE // INVERTER +			2.2 kW	2.8 kW	3.2 kW	4 kW
Indoor			CS-ME7EBE1E	CS-ME10EBE1E	CS-ME12EBE1E	CS-ME14EBE1E
Panel	Sold separately		CZ-BT20P	CZ-BT20P	CZ-BT20P	CZ-BT20P
Cooling capacity	Nominal	kW / kCal/h	2.20 / 1,892	2.80 / 2,408	3.20 / 2,752	4.00 / 3,440
Heating capacity	Nominal	kW / kCal/h	3.20 / 2,752	4.00 / 3,440	4.50 / 3,870	5.60 / 4,816
Connection		mm^2	4 x 1.5	4 x 1.5	4 x 1.5	4 x 1.5
Sound pressure level [2]	Cooling (Hi / Lo / S-Lo)	dB(A)	40 / 32 / 29	40 / 32 / 29	41 / 32 / 29	43 / 32 / 29
	Heating (Hi / Lo / S-Lo)	dB(A)	42 / 32 / 29	42 / 32 / 29	43 / 32 / 29	44 / 34 / 31
Sound power level	Cooling / Heating (Hi)	dB	53 / 55	53 / 55	54 / 56	56 / 57
Dimensions	Indoor (H x W x D)	mm	185 x 770 x 360	185 x 770 x 360	185 x 770 x 360	185 x 770 x 360
Dimensions	Panel (H x W x D)	mm	55 x 1,070 x 460	55 x 1,070 x 460	55 x 1,070 x 460	55 x 1,070 x 460
Net weight	Indoor	kg	9.8	9.8	9.8	9.8
Piping connections	Liquid / Gas pipe	inch (mm)	1/4" (6.35) / 3/8" (9.52)	1/4" (6.35) / 3/8" (9.52)	1/4" (6.35) / 3/8" (9.52)	1/4" (6.35) / 3/8" (9.52)

23dB

FLOOR CONSOLE // INVERTER +			2.8 kW	3.2 kW	5 kW
Indoor			CS-E9GFEW	CS-E12GFEW	CS-E18GFEW [1]
Cooling capacity	Nominal	kW / kCal/h	2.50 / 2,150	3.50 / 3,010	5.00 / 3,780
Heating capacity	Nominal	kW / kCal/h	3.60 / 3,100	4.80 / 4,130	5.80 / 4,730
Connection		mm^2	4 x 1.5	4 x 1.5	4 x 1.5
Sound pressure level [2]	Cooling (Hi / Lo / S-Lo)	dB(A)	38 / 27 / 23	39 / 28 / 24	44 / 36 / 32
	Heating (Hi / Lo / S-Lo)	dB(A)	38 / 27 / 23	39 / 27 / 23	46 / 36 / 32
Sound power level	Cooling / Heating (Hi)	dB	54 / 54	55 / 55	60 / 62
Dimensions	H x W x D	mm	600 x 700 x 210	600 x 700 x 210	600 x 700 x 210
Net weight		kg	14	14	14
Air purifier filter	Optional		CZ-SA14P	CZ-SA14P	CZ-SA14P
Piping connections	Liquid / Gas pipe	inch (mm)	1/4" (6.35) / 3/8" (9.52)	1/4" (6.35) / 3/8" (9.52)	1/4" (6.35) / 1/2" (12.70)

OPTIONAL

FLOOR/CEILING CONSOLE // INVERTER +			2.8 kW	4 kW	5 kW
Indoor			CS-ME10DTEG	CS-E15DTEW	CS-E18DTEW [1]
Cooling capacity	Nominal	kW / kCal/h	2.80 / 2.408	4.15 / 3,570	5.00 / 4,300
Heating capacity	Nominal	kW / kCal/h	4.00 / 3.440	5.17 / 4,450	6.10 / 5,250
Connection		mm^2	4 x 1.5	4 x 1.5	4 x 1.5
Sound pressure level [2]	Cooling (Hi / Lo / S-Lo)	dB(A)	39 / 31 / 28	45 / 37 / 34	46 / 39 / 368
	Heating (Hi / Lo / S-Lo)	dB(A)	40 / 31 / 28	45 / 33 / 30	47 / 35 / 32
Sound power level	Cooling / Heating (Hi)	dB	52 / 53	58 / 58	59 / 60
Dimensions	H x W x D	mm	540 x 1,028 x 200	540 x 1,028 x 200	540 x 1,028 x 200
Net weight		kg	17	17	18
Air purifier filter	Optional		CZ-SA14P	CZ-SA14P	CZ-SA14P
Piping connections	Liquid / Gas pipe	inch (mm)	1/4" (6.35) / 1/2" (12.70)	1/4" (6.35) / 1/2" (12.70)	1/4" (6.35) / 1/2" (12.70)

GLOBAL REMARKS

Rating conditions	Cooling	Heating
Inside air temperature	27°C DB / 19°C WB	20°C DB
Outside air temperature	35°C DB / 24°C WB	7°C DB / 6°C WB

DB : Dry buld; WB : Wet buld

These indoor/outdoor units are not suitable for Nordic countries No warranty can be applied if installed in Nordic countries

1)A CZ-MA2P pipe reducer is needed.

2)The Sound pressure level of the units shows the value measured of a position 1 meter in front of the main body and 0,8 meters below the unit. The sound pressure is measured in accordance with Eurovent 6/C/006-97 specification.

OUTDOOR UNITS FOR FREE MULTI COMBINATIONS

CU-2E15GBE-1 CU-2E18CBPG CU-3E18JBE CU-3E23CBPG CU-4E23JBE CU-4E27CBPG

OUTDOOR UNIT // INVERTER +

Unit			4.4 to 5.0 kW CU-2E15GBE-1	4.4 to 6.4 kW CU-2E18CBPG	5.0 to 9.0 kW CU-3E18JBE	5,0 to 10,0 Kw CU-3E23CBPG	5.0 to 11.0 kW CU-4E23JBE	5.0 to 13.6 kW CU-4E27CBPG
Cooling capacity	Nominal (Min - Max)	kW	4.50 (1.50-5.00)	5.20 (1.50-5.40)	5.20 (1.80-7.30)	6.80 (2.80-8.40)	6.80 (2.80-8.40)	8.00 (3.00-9.20)
	Nominal (Min - Max)	kCal/h	3,870 (1,290-4,300)	4,472 (1,290-4,644)	4,472 (1,290-4,644)	5,848 (2,408-7,224)	5,848 (2,408-7,224)	6,880 (2,580-7,912)
EER [1]	Nominal	Energy Saving Classification	3.66 A	3.42 A	4.33 A	3.49 A	4.05 A	4.04 A
Power input Cooling	Nominal (Min - Max)	kW	1.23 (0.25-1.35)	1.52 (0.25-1.58)	1.20 (0.36-2.18)	1.95 (0.490-2.800)	1.68 (0.49-2.80)	1.98 (0.53-2.87)
Heating capacity	Nominal (Min - Max)	kW	5.40 (1.10-7.00)	5.60 (1.10-7.20)	6.80 (1.60-8.30)	8.60 (3.50-9.10)	8.60 (3.50-9.10)	9.40 (4.20-10.60)
	Nominal (Min - Max)	kCal/h	4,644 (946-6,020)	4,816 (946-6,192)	4,816 (946-6,192)	7,396 (3,010-7,826)	7,396 (3,010-7,826)	8,084 (3,612/-9,116)
COP [1]	Nominal	Energy Saving Classification	4.62 A	4.63 A	4.86 A	4.57 A	4.65 A	4.52 A
Power input Heating	Nominal (Min - Max)	kW	1.17 (0.21-1.67)	1.21 (0.21-1.70)	1.40 (0.32-2.11)	1.88 (0.56-2.71)	1.85 (0.56-2.71)	2.08 (0.70-3.06)
Current Cooling	Nominal	A	5.75	7.10	5.30	8.50	7.50	8.70
Current Heating	Nominal	A	5.20	5.35	6.50	8.30	8.60	9.10
Power source		V	230	230	230	230	230	230
Sound pressure level [2]	Cooling (Hi)	dB(A)	47	49	46	48	48	48
	Heating (Hi)	dB(A)	49	51	47	49	49	49
Sound power level	Cooling (Hi)	dB	62	64	60	61	62	61
	Heating (Hi)	dB	64	66	61	62	63	62
Dimensions [3]	H x W x D	mm	540x780 (+70)x289	540x780 (+70)x289	795x875 (+70)x320	735x826(+110)x300	795x875 (+70)x320	908x900x320
Net weight		kg	38	38	65	57	65	73
Piping connections	Liquid pipe	inch (mm)	1/4" (6.35)	1/4" (6.35)	1/4" (6.35)	1/4" (6.35)	1/4" (6.35)	1/4" (6.35)
	Gas pipe	inch (mm)	3/8" (9.52)	3/8" (9.52)	3/8" (9.52)	3/8" (9.52)	3/8" (9.52)	3/8" (9.52)
Refrigerant Loading	R410A	kg	1.45	1.45	2.00	2.60	2.60	3.10
Elevation difference (in/out) [4]	Max	m	10	10	10	15	15	15
Piping length total	Max	m	30	30	50	50	50	70
Piping length to one unit	Min / Max	m	3-20	3-20	3-25	3-25	3-25	3-25
Piping length without refegirent increase	Max	m	20	20	30	30	30	30
Additional gas		g/m	20	20	20	20	20	20
Operating range, outdoor [2]	Cooling Min / Max	°c	16 / 43	16 / 43	-10 / 46	16 / 43	-10 / 46	16 / 43
	Heating Min / Max	°c	-15 / 24	-15 / 24	-15 / 24	-15 / 24	-15 / 24	-15 / 24

GLOBAL REMARKS

Rating conditions	Cooling	Heating
Inside air temperature	27°C DB / 19°C WB	20°C DB
Outside air temperature	35°C DB / 24°C WB	7°C DB / 6°C WB

DB : Dry buld; WB : Wet buld

These indoor/outdoor units are not suitable for Nordic countries No warranty can be applied if installed in Nordic countries

1) EER and COP classification is at 230V in accordance with EU directive 2002/31/EC.

2) The Sound pressure level of the units shows the value measured of a position 1 meter in front of the main body and 0,8 meters below the unit. The sound pressure is measured in accordance with Eurovent 6/C/006-97 specification.

3) Add 70 or 110mm for piping port.

4) When installing the outdoor unit at a higher position than the indoor unit.

FREE MULTI COMBINATIONS

FREE MULTI 2X1 — OUTDOOR UNIT CU-2E15GBE-1

Operating unit capacity	Cooling power (Kw) Room A	Room B	Total	R. Current A	Consumption W	EER	Heating power (Kw) Room A	Room B	Total	R. Current A	Consumption W	COP	A.C.E [1] kWh
1 Unit													
7	2.20	–	2.20 (1.10-2.90)	2.45	520 (220-750)	4.23 A	3.20	–	3.20 (0.70-4.80)	3.75	850 (170-1,410)	3.77 A	260
9	2.80	–	2.80 (1.10-3.50)	3.50	750 (220-1,000)	3.73 A	4.00	–	4.00 (0.70-5.50)	5.10	1,150 (170-1,700)	3.48 B	375
12	3.20	–	3.20 (1.10-4.00)	4.30	921 (220-1,220)	3.48 A	4.50	–	4.50 (0.70-6.20)	5.50	1,250 (170-1,810)	3.60 B	460
2 Units													
7 + 7	2.25	2.25	4.50 (1.50-5.00)	5.75	1,230 (250-1,350)	3.66 A	2.70	2.70	5.40 (1.10-7.00)	5.20	1,170 (210-1,670)	4.62 A	615
7 + 9	2.00	2.50	4.50 (1.50-5.20)	5.75	1,230 (250-1,520)	3.66 A	2.40	3.00	5.40 (1.10-7.00)	5.20	1,170 (210-1,670)	4.62 A	615
7 + 12	1.80	2.70	4.50 (1.50-5.20)	5.80	1,250 (250-1,530)	3.60 A	2.20	3.20	5.40 (1.10-7.00)	5.20	1,170 (210-1,670)	4.62 A	625
7 + 9 [2]	2.00	2.50	4.50 (1.50-5.20)	6.50	1,390 (250-1,730)	3.24 A	2.40	3.00	5.40 (1.10-7.00)	6.05	1,360 (210-1,670)	3.97 A	695
7 + 9 [3]	2.00	2.50	4.50 (1.50-5.20)	6.50	1,390 (250-1,730)	3.24 A	2.40	3.00	5.40 (1.10-7.00)	6.05	1,360 (210-1,670)	3.97 A	695
7 + 12 [3]	1.80	2.70	4.50 (1.50-5.20)	5.80	1,250 (250-1,530)	3.60 A	2.20	3.20	5.40 (1.10-7.00)	5.45	1,230 (210-1,720)	4.39 A	625
9+9	2.25	2.25	4.50 (1.50-5.20)	8.50	1,230 (250-1,520)	3.66 A	2.70	2.70	5.40 (1.10-7.00)	6.05	1,170 (210-1,670)	4.62 A	695
9+9 [3]	2.25	2.25	4.50 (1.50-5.20)	8.50	1,350 (250-1,730)	3.24 A	2.70	2.70	5.40 (1.10-7.00)	6.05	1,360 (210-1,670)	4.45 A	695
9 [3] + 9 [3]	2.25	2.25	4.50 (1.50-5.20)	8.50	1,350 (250-1,730)	3.24 A	2.70	2.70	5.40 (1.10-7.00)	6.05	1,360 (210-1,670)	4.45 A	695

FREE MULTI 2X1 — OUTDOOR UNIT CU-2E18CBPG

Operating unit capacity	Cooling power (Kw) Room A	Room B	Total	R. Current A	Consumption W	EER	Heating power (Kw) Room A	Room B	Total	R. Current A	Consumption W	COP	A.C.E [1] kWh
1 Unit													
7	2.20	–	2.20 (1.10-2.90)	2.45	520 (220-750)	4.23 A	3.20	–	3.20 (0.70-4.80)	3.75	850 (170-1,410)	3.77 A	260
9	2.80	–	2.80 (1.10-3.50)	3.50	750 (220-1,000)	3.73 A	4.00	–	4.00 (0.70-5.50)	5.10	1,150 (170-1,700)	3.48 B	375
12	3.20	–	3.20 (1.10-4.00)	4.30	920 (220-1,220)	3.48 A	4.50	–	4.50 (0.70-6.20)	5.55	1,250 (170-1,810)	3.60 B	460
2 Units													
7 + 7	2.25	2.25	4.50 (1.50-5.00)	5.75	1,230 (250-1,350)	3.66 A	2.70	2.70	5.40 (1.10-7.00)	5.20	1,170 (210-1,670)	4.62 A	615
7 + 9	2.00	2.50	4.50 (1.50-5.00)	5.75	1,230 (250-1,520)	3.66 A	2.40	3.00	5.40 (1.10-7.00)	5.20	1,170 (210-1,670)	4.62 A	615
7 + 9 [4]	2.00	2.50	4.50 (1.50-5.00)	6.50	1,390 (250-1,730)	3.24 A	2.40	3.00	5.40 (1.10-7.00)	6.05	1,360 (210-1,670)	3.97 A	695
7 + 12	1.95	2.85	4.80 (1.50-5.30)	6.10	1,310 (250-1,540)	3.66 A	2.30	3.30	5.60 (1.10-7.20)	5.45	1,230 (210-1,720)	4.55 A	655
9 + 9	2.40	2.40	4.80 (1.50-5.30)	6.10	1,310 (250-1,520)	3.66 A	2.80	2.80	5.60 (1.10-7.20)	5.55	1,250 (210-1,740)	4.48 A	655
9 [4] + 9 [4]	2.40	2.40	4.80 (1.50-5.30)	7.25	1,560 (250-1,730)	3.08 B	2.80	2.80	5.60 (1.10-7.20)	6.50	1,470 (210-1,740)	3.81 A	780
9 + 12	2.30	2.70	5.00 (1.50-5.30)	6.95	1,490 (250-1,540)	3.36 A	2.60	3.00	5.60 (1.10-7.20)	5.45	1,230 (210-1,720)	4.55 A	745
9 [4] + 12	2.30	2.70	5.00 (1.50-5.30)	7.80	1,670 (250-1,800)	2.99 C	2.60	3.00	5.60 (1.10-7.20)	6.15	1,390 (210-1,720)	4.03 A	835
12 + 12	2.60	2.60	5.20 (1.50-5.40)	7.10	1,520 (250-1,580)	3.42 A	2.80	2.80	5.60 (1.10-7.20)	5.35	1,210 (210-1,700)	4.63 A	760

FREE MULTI 3X1 — OUTDOOR UNIT CU-3E18JBE

Operating unit capacity	Cooling power (Kw) Room A	Room B	Room C	Total	R. Current A	Consumption W	EER	Heating power (Kw) Room A	Room B	Room C	Total	R. Current A	Consumption W	COP	A.C.E [1] kWh
1 Unit															
7	2.20	–	–	2.20 (1.8-2.9)	2.50	500 (340-810)	4.40 A	3.20	–	–	3.20 (1.2-4.1)	3.70	740 (300-1,230)	4.32 A	250
9	2.80	–	–	2.80 (1.8-2.9)	3.30	700 (340-810)	4.00 A	4.00	–	–	4.00 (1.2-4.3)	5.00	1,050 (300-1,230)	3.81 A	350
12	3.20	–	–	3.20 (1.8-3.8)	3.70	800 (340-1,360)	4.00 A	4.50	–	–	4.50 (1.2-5.8)	5.80	1,230 (300-2,100)	3.66 A	400
15	4.00	–	–	4.00 (1.8-4.3)	5.60	1,240 (340-1,990)	3.23 A	5.60	–	–	5.60 (1.2-6.8)	7.70	1,720 (300-2,930)	3.26 C	620
18	5.00	–	–	5.00 (1.9-5.7)	6.80	1,550 (340-2,130)	3.23 A	6.80	–	–	6.80 (1.2-6.9)	9.20	2,100 (300-2,520)	3.24 C	775
2 Units															
7 + 7	2.20	2.20	–	4.40 (1.9-6.2)	4.90	1,110 (350-2,100)	3.96 A	2.90	2.90	–	5.80 (1.4-7.0)	6.40	1,450 (310-2,550)	4.00 A	555
7 + 9	2.20	2.80	–	5.00 (1.9-6.2)	6.20	1,410 (350-2,100)	3.55 A	2.82	3.58	–	6.40 (1.4-7.0)	7.60	1,720 (310-2,550)	3.72 A	705
7 + 12	2.12	3.08	–	5.20 (1.9-6.3)	6.60	1,490 (350-2,110)	3.49 A	2.77	4.03	–	6.80 (1.4-7.3)	8.20	1,840 (310-2,520)	3.70 A	745
7 + 15	1.85	3.35	–	5.20 (1.9-6.4)	6.40	1,450 (350-2,110)	3.59 A	2.41	4.39	–	6.80 (1.4-7.3)	7.90	1,800 (310-2,510)	3.78 A	725
7 + 18	1.59	3.61	–	5.20 (1.9-6.8)	5.70	1,290 (360-2,150)	4.03 A	2.08	4.72	–	6.80 (1.4-8.0)	6.70	1,520 (310-2,200)	4.47 A	645
9 + 9	2.60	2.60	–	5.20 (1.9-6.2)	6.80	1,540 (350-2,100)	3.38 A	3.40	3.40	–	6.80 (1.4-7.0)	8.50	1,930 (310-2,550)	3.52 B	770
9 + 12	2.43	2.77	–	5.20 (1.9-6.3)	6.50	1,480 (350-2,110)	3.51 A	3.17	3.63	–	6.80 (1.4-7.3)	8.10	1,840 (310-2,520)	3.70 A	740
9 + 15	2.14	3.06	–	5.20 (1.9-6.4)	6.40	1,440 (350-2,110)	3.61 A	2.80	4.00	–	6.80 (1.4-7.3)	8.00	1,800 (310-2,510)	3.78 A	720
9 + 18	1.87	3.33	–	5.20 (1.9-6.8)	5.70	1,290 (360-2,150)	4.03 A	2.44	4.36	–	6.80 (1.4-8.0)	6.70	1,520 (310-2,200)	4.47 A	645
12 + 12	2.60	2.60	–	5.20 (1.9-6.4)	6.40	1,450 (350-2,120)	3.59 A	3.40	3.40	–	6.80 (1.4-7.5)	7.70	1,750 (310-2,490)	3.89 A	725
12 + 15	2.31	2.89	–	5.20 (1.9-6.5)	6.30	1,410 (350-2,120)	3.69 A	3.02	3.78	–	6.80 (1.4-7.5)	7.80	1,750 (310-2,470)	3.89 A	705
12 + 18	2.03	3.17	–	5.20 (1.9-6.9)	5.50	1,250 (360-2,150)	4.16 A	2.65	4.15	–	6.80 (1.4-8.0)	6.60	1,500 (310-2,180)	4.53 A	625
15 + 15	2.60	2.60	–	5.20 (1.9-6.5)	6.20	1,410 (350-2,120)	3.69 A	3.40	3.40	–	6.80 (1.4-7.6)	7.50	1,710 (310-2,470)	3.98 A	705
15 + 18	2.31	2.89	–	5.20 (1.9-6.9)	5.50	1,250 (360-2,160)	4.16 A	3.02	3.78	–	6.80 (1.4-8.0)	6.60	1,500 (310-2,170)	4.53 A	625
3 Units															
7 + 7 + 7	1.73	1.73	1.73	5.19 (1.9-7.2)	5.30	1,220 (360-2,170)	4.25 A	2.26	2.26	2.26	6.78 (1.5-8.1)	6.70	1,510 (320-2,120)	4.49 A	610
7 + 7 + 9	1.59	1.59	2.02	5.20 (1.9-7.2)	5.30	1,220 (360-2,170)	4.26 A	2.08	2.08	2.64	6.80 (1.5-8.1)	6.70	1,510 (320-2,120)	4.50 A	610
7 + 7 + 12	1.51	1.51	2.18	5.20 (1.9-7.2)	5.30	1,210 (360-2,180)	4.30 A	1.97	1.97	2.86	6.80 (1.4-8.3)	6.50	1,470 (320-2,110)	4.63 A	605
7 + 7 + 15	1.36	1.36	2.48	5.20 (1.8-7.3)	5.30	1,210 (360-2,180)	4.30 A	1.78	1.78	3.24	6.80 (1.6-8.3)	6.40	1,440 (320-2,110)	4.72 A	605
7 + 9 + 9	1.46	1.87	1.87	5.20 (1.9-7.2)	5.30	1,220 (360-2,170)	4.26 A	1.92	2.44	2.44	6.80 (1.5-8.1)	6.70	1,510 (320-2,120)	4.50 A	610
7 + 9 + 12	1.40	1.78	2.02	5.20 (1.9-7.2)	5.30	1,210 (360-2,180)	4.30 A	1.83	2.32	2.65	6.80 (1.4-8.3)	6.50	1,470 (320-2,110)	4.63 A	605
7 + 9 + 15	1.27	1.62	2.31	5.20 (1.8-7.3)	5.30	1,200 (360-2,180)	4.33 A	1.66	2.12	3.02	6.80 (1.6-8.3)	6.50	1,400 (320-2,110)	4.86 A	600
7 + 12 + 12	1.34	1.93	1.93	5.20 (1.8-7.3)	5.30	1,200 (360-2,180)	4.33 A	1.74	2.53	2.53	6.80 (1.6-8.3)	6.30	1,410 (320-2,100)	4.82 A	600
9 + 9 + 9	1.73	1.73	1.73	5.19 (1.9-7.2)	5.30	1,220 (360-2,170)	4.25 A	2.26	2.26	2.26	6.78 (1.5-8.1)	6.70	1,510 (320-2,120)	4.49 A	610
9 + 9 + 12	1.65	1.65	1.90	5.20 (1.9-7.2)	5.30	1,210 (360-2,180)	4.30 A	2.16	2.16	2.48	6.80 (1.4-8.3)	6.50	1,470 (320-2,110)	4.63 A	605

1) The annual consumption is calculated by multiplying the input power at 230V by an avarage of 500 hours per year in cooling mode.
2) Hide-Away type.
3) Floor type.
4) The specifications are different from other types of indoor units when 2.8kW duct types or floor/ceiling types are connected to CU-2E18CBPG.

FREE MULTI 3X1 — OUTDOOR UNIT CU-3E23CBPG

Operating unit capacity	Cooling power (Kw) Room A	Room B	Room C	Total	R. Current A	Consumption W	EER	Heating power (Kw) Room A	Room B	Room C	Total	R. Current A	Consumption W	COP	A.C.E [1] kWh
1 Unit															
7	2.20	–	–	2.20 (1.90-2.70)	2.25	450 (380-620)	4.89 A	3.20	–	–	3.20 (1.70-4.10)	3.85	840 (370 - 1,310)	3.81 A	225
9	2.80	–	–	2.80 (2.00-3.40)	2.95	620 (380-900)	4.52 A	4.00	–	–	4.00 (1.70-4.30)	5.40	1,210 (370 - 1,400)	3.31 C	310
12	3.20	–	–	3.20 (2.00-3.90)	3.40	720 (380-1,090)	4.45 A	4.50	–	–	4.50 (1.70-5.70)	5.85	1,310 (370 - 1,910)	3.44 B	360
15	4.00	–	–	4.00 (2.00-4.40)	4.60	1,030 (380-1,390)	3.88 A	5.60	–	–	5.60 (1.80-7.20)	8.35	1,900 (370 - 2,920)	2.95 D	515
18	5.00	–	–	5.00 (2.10-5.20)	7.15	1,610 (400-1,800)	3.11 B	7.10	–	–	7.10 (2.10-7.30)	12.40	2,840 (430 - 2,890)	2.50 F	805
2 Units															
7+7	2.20	2.20	–	4.40 (2.10-5.00)	4.45	980 (400-1,260)	4.49 A	3.15	3.15	–	6.30 (1.80-8.60)	6.25	1,410 (400 - 2,570)	4.47 A	490
7+9([1])	2.20	2.80	–	5.00 (2.10-6.10)	5.50	1,230 (400-1,880)	4.07 A	3.10	4.00	–	7.10 (2.10-8.60)	7.55	1,700 (420 - 2,570)	4.18 A	615
7+12	2.20	3.20	–	5.40 (2.20-7.00)	6.10	1,370 (400-2,790)	3.94 A	3.05	4.45	–	7.50 (2.20-8.70)	7.75	1,740 (420 - 2,970)	4.31 A	685
7+15	2.20	4.00	–	6.20 (2.20-7.10)	8.00	1,820 (400-2,790)	3.41 A	2.90	5.30	–	8.20 (2.40-8.70)	8.85	2,010 (440 - 2,970)	4.08 A	910
7+18	2.10	4.70	–	6.80 (2.50-7.10)	9.85	2,240 (460-2,800)	3.04 B	2.65	5.95	–	8.60 (3.20-9.00)	9.50	2,160 (530 - 2,960)	3.98 A	1,120
9+9	2.80	2.80	–	5.60 (2.20-6.90)	6.85	1,550 (400-2,780)	3.61 A	3.85	3.85	–	7.70 (2.30-8.70)	8.45	1,930 (440 - 3,040)	3.99 A	775
9+12	2.80	3.20	–	6.00 (2.20-7.00)	7.55	1,700 (400-2,790)	3.53 A	3.70	4.30	–	8.00 (2.40-8.80)	8.60	1,970 (440 - 3,020)	4.06 A	850
9+15	2.80	4.00	–	6.80 (2.20-7.10)	10.50	2,390 (400-2,790)	2.85 C	3.55	5.05	–	8.60 (2.10-9.00)	9.55	2,175 (530 - 3,030)	3.95 A	1,195
9+18	2.45	4.35	–	6.80 (2.50-7.20)	9.85	2,230 (460-2,800)	3.05 B	3.10	5.50	–	8.60 (3.20-9.00)	9.50	2,150 (530 - 3,010)	4.00 A	1,115
12+12	3.20	3.20	–	6.40 (2.20-7.30)	8.15	1,860 (400-2,810)	3.44 A	4.20	4.20	–	8.40 (2.50-9.00)	9.05	2,050 (470 - 2,970)	4.10 A	930
12+15	3.00	3.80	–	6.80 (2.50-7.30)	9.65	2,200 (460-2,810)	3.09 B	3.80	4.80	–	8.60 (3.20-9.00)	9.20	2,090 (530 - 2,970)	4.12 A	1,100
12+18	2.65	4.15	–	6.80 (2.60-7.40)	9.30	2,120 (460-2,820)	3.21 A	3.35	5.25	–	8.60 (3.20-9.00)	9.15	2,080 (530 - 2,950)	4.14 A	1,060
15+15	3.40	3.40	–	6.80 (2.50-7.30)	9.65	2,190 (460-2,810)	3.11 B	4.30	4.30	–	8.60 (3.20-9.00)	9.15	2,080 (530 - 2,970)	4.14 A	1,095
15+18	3.00	3.80	–	6.80 (2.70-7.40)	9.30	2,110 (480-2,820)	3.22 A	3.80	4.80	–	8.60 (3.20-9.10)	9.15	2,070 (530 - 2,950)	4.16 A	1,055
18+18	3.40	3.40	–	6.80 (2.80-7.40)	9.15	2,070 (480-2,820)	3.29 A	4.30	4.30	–	8.60 (3.50-9.10)	9.15	2,070 (590 - 2,940)	4.16 A	1,035
3 Units															
7+7+7	2.20	2.20	2.20	6.60 (2.20-7.70)	8.10	1,850 (410-2,450)	3.57 A	2.86	2.86	2.86	8.58 (3.10-8.90)	8.50	1,940 (500 - 2,800)	4.42 A	925
7+7+9	2.10	2.10	2.60	6.80 (2.50-8.10)	8.70	1,980 (460-2,820)	3.43 A	2.65	2.65	3.30	8.60 (3.20-8.90)	8.70	1,980 (510 - 2,800)	4.34 A	990
7+7+12	1.95	1.95	2.90	6.80 (2.50-8.10)	8.80	1,990 (460-2,790)	3.42 A	2.50	2.50	3.60	8.60 (3.20-9.00)	8.60	1,960 (510 - 2,780)	4.39 A	995
7+7+15	1.80	1.80	3.20	6.80 (2.60-8.20)	8.60	1,970 (460-2,790)	3.45 A	2.25	2.25	4.10	8.60 (3.20-8.80)	8.50	1,940 (510 - 2,760)	4.43 A	985
7+7+18	1.60	1.60	3.60	6.80 (2.80-8.30)	8.60	1,960 (490-2,790)	3.47 A	2.00	2.00	4.60	8.60 (3.20-8.80)	8.45	1,920 (510 - 2,760)	4.48 A	980
7+9+9	1.90	2.45	2.45	6.80 (2.50-8.10)	8.50	1,950 (460-2,780)	3.49 A	2.40	3.10	3.10	8.60 (3.20-9.00)	8.45	1,930 (510 - 2,730)	4.46 A	975
7+9+12	1.80	2.35	2.65	6.80 (2.60-8.10)	8.70	1,980 (460-2,790)	3.43 A	2.30	2.95	3.35	8.60 (3.20-8.80)	8.45	1,930 (510 - 2,760)	4.46 A	990
7+9+15	1.65	2.15	3.00	6.80 (2.70-8.20)	8.60	1,960 (490-2,790)	3.47 A	2.10	2.70	3.80	8.60 (3.20-9.00)	8.35	1,910 (510 - 2,760)	4.50 A	980
7+9+18	1.50	1.90	3.40	6.80 (2.80-8.30)	8.50	1,950 (490-2,790)	3.49 A	1.90	2.40	4.30	8.60 (3.50-9.00)	8.45	1,920 (560 - 2,730)	4.48 A	975
7+12+12	1.70	2.55	2.55	6.80 (2.70-8.30)	8.60	1,970 (460-2,800)	3.45 A	2.20	3.20	3.20	8.60 (3.20-9.10)	8.35	1,910 (500 - 2,710)	4.50 A	985
7+12+15	1.60	2.30	2.90	6.80 (2.80-8.30)	8.50	1,950 (490-2,800)	3.49 A	2.00	2.95	3.65	8.60 (3.20-9.00)	8.25	1,890 (500 - 2,710)	4.55 A	975
9+9+9	2.26	2.26	2.26	6.78 (2.60-8.10)	8.50	1,940 (460-2,820)	3.50 A	2.86	2.86	2.86	8.58 (3.20-9.00)	8.35	1,910 (510 - 2,760)	4.49 A	970
9+9+12	2.15	2.15	2.50	6.80 (2.70-8.20)	8.60	1,960 (490-2,790)	3.47 A	2.75	2.75	3.10	8.60 (3.20-9.00)	8.45	1,920 (510 - 2,760)	4.48 A	980
9+9+15	2.00	2.00	2.80	6.80 (2.80-8.20)	8.50	1,950 (490-2,790)	3.49 A	2.50	2.50	3.60	8.60 (3.30-9.00)	8.35	1,900 (530 - 2,760)	4.53 A	975
9+12+12	2.10	2.35	2.35	6.80 (2.70-8.30)	8.60	1,960 (490-2,800)	3.47 A	2.60	3.00	3.00	8.60 (3.20-9.00)	8.35	1,900 (500 - 2,710)	4.53 A	980

FREE MULTI 4X1 — OUTDOOR UNIT CU-4E23JBE

Operating unit capacity	Cooling power (Kw) Room A	Room B	Room C	Room D	Total	R. Current A	Consumption W	EER	Heating power (Kw) Room A	Room B	Room C	Room D	Total	R. Current A	Consumption W	COP	A.C.E [1] kWh
1 Unit																	
7	2.20	–	–	–	2.20 (1.80-2.90)	2.50	500 (340-810)	4.40 A	3.20	–	–	–	3.20 (1.20-4.10)	3.70	740 (300-1,230)	4.32 A	250
9	2.80	–	–	–	2.80 (1.80-2.90)	3.50	700 (340-810)	4.00 A	4.00	–	–	–	4.00 (1.20-4.30)	5.20	1,050 (300-1,230)	3.81 A	350
12	3.20	–	–	–	3.20 (1.80-3.80)	3.90	800 (340-1,360)	4.00 A	4.50	–	–	–	4.50 (1.20-5.80)	6.00	1,230 (300-2,100)	3.66 A	400
15	4.00	–	–	–	4.00 (1.80-4.30)	5.80	1,240 (340-1,990)	3.23 A	5.60	–	–	–	5.60 (1.20-6.80)	8.00	1,720 (300-2,930)	3.26 B	620
18	5.00	–	–	–	5.00 (1.80-5.70)	7.20	1,550 (340-2,130)	3.23 A	6.80	–	–	–	6.80 (1.20-6.90)	9.70	2,100 (300-2,520)	3.24 B	775
21	6.00	–	–	–	6.00 (1.80-6.20)	9.20	2,030 (340-2,330)	2.96 D	8.50	–	–	–	8.50 (1.30-9.00)	11.10	2,400 (620-2,530)	3.54 B	1,015
2 Units																	
7+7	2.20	2.20	–	–	4.40 (1.90-6.44)	5.00	1,110 (340-2,150)	3.96 A	2.90	2.90	–	–	5.80 (2.69-9.80)	6.70	1,450 (610-2,800)	4.00 A	555
7+9	2.20	2.80	–	–	5.00 (1.90-6.44)	6.30	1,410 (340-2,150)	3.55 A	2.82	3.58	–	–	6.40 (2.69-9.80)	8.00	1,720 (610-2,800)	3.72 A	705
7+12	2.20	3.20	–	–	5.40 (1.90-6.91)	7.00	1,570 (340-2,410)	3.44 A	2.85	4.15	–	–	7.00 (2.72-9.90)	8.50	1,840 (590-2,800)	3.80 A	785
7+15	2.20	4.00	–	–	6.20 (1.90-6.94)	8.40	1,870 (330-2,410)	3.32 A	2.91	5.29	–	–	8.20 (2.73-9.90)	10.20	2,210 (590-2,800)	3.71 A	935
7+18	2.08	4.72	–	–	6.80 (2.00-7.51)	8.10	1,800 (320-2,440)	3.78 A	2.63	5.97	–	–	8.60 (2.81-10.20)	9.90	2,140 (530-2,760)	4.02 A	900
7+21	1.82	4.98	–	–	6.80 (2.00-7.51)	8.10	1,800 (320-2,440)	3.78 A	2.31	6.29	–	–	8.60 (2.81-10.20)	10.60	2,290 (530-2,760)	3.76 A	900
9+9	2.80	2.80	–	–	5.60 (1.90-6.78)	6.90	1,550 (340-2,400)	3.61 A	4.00	4.00	–	–	8.00 (2.69-9.80)	9.80	2,120 (610-2,800)	3.77 A	775
9+12	2.80	3.20	–	–	6.00 (1.90-6.91)	7.80	1,750 (340-2,410)	3.43 A	3.97	4.53	–	–	8.50 (2.72-9.90)	10.50	2,280 (590-2,800)	3.73 A	875
9+15	2.80	4.00	–	–	6.80 (1.90-6.94)	9.70	2,170 (330-2,410)	3.13 C	3.54	5.06	–	–	8.60 (2.73-9.90)	10.70	2,320 (590-2,800)	3.71 A	1,085
9+18	2.44	4.36	–	–	6.80 (1.90-7.51)	8.80	1,970 (320-2,440)	3.45 A	3.09	5.51	–	–	8.60 (2.81-10.20)	9.90	2,140 (530-2,760)	4.02 A	985
9+21	2.16	4.64	–	–	6.80 (1.90-7.51)	8.80	1,970 (320-2,440)	3.45 A	2.74	5.86	–	–	8.60 (2.81-10.20)	9.90	2,140 (530-2,760)	4.02 A	985
12+12	3.20	3.20	–	–	6.40 (1.90-7.04)	8.80	1,960 (330-2,420)	3.27 A	4.30	4.30	–	–	8.60 (2.75-10.00)	10.50	2,270 (580-2,800)	3.79 A	980
12+15	3.02	3.78	–	–	6.80 (1.90-7.06)	9.30	2,070 (330-2,420)	3.29 C	3.82	4.78	–	–	8.60 (2.76-10.00)	10.50	2,270 (570-2,800)	3.79 A	1,035
12+18	2.65	4.15	–	–	6.80 (2.00-7.62)	8.50	1,890 (320-2,450)	3.60 A	3.36	5.24	–	–	8.60 (2.82-10.30)	9.70	2,090 (520-2,740)	4.11 A	945
12+21	2.37	4.43	–	–	6.80 (2.00-7.62)	8.50	1,890 (320-2,450)	3.60 A	2.99	5.61	–	–	8.60 (2.82-10.30)	9.70	2,090 (520-2,740)	4.11 A	945
15+15	3.40	3.40	–	–	6.80 (1.90-7.09)	10.20	2,270 (330-2,420)	3.00 C	4.30	4.30	–	–	8.60 (2.77-10.00)	10.50	2,260 (560-2,800)	3.81 A	1,135
15+18	3.02	3.78	–	–	6.80 (2.00-7.64)	8.50	1,890 (320-2,450)	3.60 A	3.82	4.78	–	–	8.60 (2.82-10.30)	9.60	2,080 (510-2,740)	4.13 A	945
15+21	2.72	4.08	–	–	6.80 (2.00-7.64)	8.50	1,890 (320-2,450)	3.60 A	3.44	5.16	–	–	8.60 (2.82-10.30)	9.60	2,080 (510-2,740)	4.13 A	945
18+18	3.40	3.40	–	–	6.80 (2.10-8.11)	8.00	1,780 (310-2,460)	3.82 A	4.30	4.30	–	–	8.60 (2.80-10.50)	9.10	1,960 (480-2,650)	4.39 A	890
18+21	3.09	3.71	–	–	6.80 (2.10-8.11)	8.00	1,780 (310-2,460)	3.82 A	3.91	4.69	–	–	8.60 (2.80-10.50)	9.10	1,960 (480-2,650)	4.39 A	890
3 Units																	
7+7+7	2.20	2.20	2.20	–	6.60 (1.90-7.95)	8.20	1,820 (340-2,460)	3.63 A	2.86	2.86	2.86	–	8.58 (3.28-10.40)	9.70	2,090 (600-2,840)	4.11 A	910
7+7+9	2.08	2.08	2.64	–	6.80 (1.90-7.95)	8.60	1,910 (340-2,460)	3.56 A	2.63	2.63	3.34	–	8.60 (3.28-10.40)	9.70	2,090 (600-2,840)	4.11 A	955
7+7+12	1.97	1.97	2.86	–	6.80 (1.90-8.04)	8.60	1,910 (340-2,460)	3.56 A	2.49	2.49	3.62	–	8.60 (3.28-10.40)	9.60	2,070 (590-2,820)	4.15 A	955
7+7+15	1.78	1.78	3.24	–	6.80 (1.90-8.06)	8.30	1,860 (340-2,460)	3.66 A	2.25	2.25	4.10	–	8.60 (3.28-10.50)	9.50	2,060 (590-2,810)	4.17 A	930
7+7+18	1.59	1.59	3.62	–	6.80 (2.00-8.46)	7.80	1,730 (340-2,460)	3.93 A	2.01	2.01	4.58	–	8.60 (3.20-10.60)	8.90	1,930 (570-2,710)	4.46 A	865
7+7+21	1.44	1.44	3.92	–	6.80 (2.00-8.46)	7.80	1,730 (340-2,460)	3.93 A	1.82	1.82	4.96	–	8.60 (3.20-10.60)	8.90	1,930 (570-2,710)	4.46 A	865
7+9+9	1.92	2.44	2.44	–	6.80 (1.90-7.95)	8.60	1,910 (340-2,460)	3.56 A	2.42	3.09	3.09	–	8.60 (3.28-10.40)	9.70	2,090 (600-2,840)	4.11 A	955
7+9+12	1.82	2.32	2.65	–	6.80 (1.90-8.04)	8.60	1,910 (340-2,460)	3.56 A	2.30	2.94	3.36	–	8.60 (3.28-10.40)	9.60	2,070 (590-2,820)	4.15 A	955
7+9+15	1.66	2.12	3.02	–	6.80 (1.90-8.06)	8.30	1,860 (340-2,460)	3.66 A	2.10	2.68	3.82	–	8.60 (3.28-10.50)	9.50	2,060 (590-2,810)	4.17 A	930
7+9+18	1.50	1.90	3.40	–	6.80 (2.00-8.46)	7.80	1,730 (340-2,460)	3.93 A	1.89	2.41	4.30	–	8.60 (3.20-10.60)	8.90	1,930 (570-2,710)	4.46 A	865
7+9+21	1.36	1.73	3.71	–	6.80 (2.00-8.46)	7.80	1,730 (340-2,460)	3.93 A	1.72	2.19	4.69	–	8.60 (3.20-10.60)	8.90	1,930 (570-2,710)	4.46 A	865
7+12+12	1.74	2.53	2.53	–	6.80 (1.90-8.13)	8.30	1,860 (340-2,460)	3.66 A	2.20	3.20	3.20	–	8.60 (3.27-10.50)	9.50	2,050 (590-2,800)	4.20 A	930
7+12+15	1.59	2.31	2.89	–	6.80 (1.90-8.15)	8.30	1,860 (340-2,460)	3.66 A	2.01	2.93	3.66	–	8.60 (3.27-10.50)	9.40	2,040 (580-2,790)	4.22 A	930
7+12+18	1.44	2.09	3.27	–	6.80 (2.00-8.53)	7.80	1,730 (340-2,460)	3.93 A	1.82	2.65	4.13	–	8.60 (3.17-10.60)	8.80	1,910 (570-2,680)	4.50 A	865
7+15+15	1.46	2.67	2.67	–	6.80 (1.90-8.17)	8.20	1,820 (340-2,460)	3.74 A	1.86	3.37	3.37	–	8.60 (3.26-10.50)	9.40	2,030 (580-2,780)	4.24 A	910
9+9+9	2.26	2.26	2.26	–	6.78 (1.90-7.95)	8.60	1,910 (340-2,460)	3.55 A	2.86	2.86	2.86	–	8.60 (3.28-10.40)	9.70	2,090 (600-2,840)	4.11 A	955
9+9+12	2.16	2.16	2.48	–	6.80 (1.90-8.04)	8.60	1,910 (340-2,460)	3.56 A	2.74	2.74	3.12	–	8.60 (3.28-10.40)	9.60	2,070 (590-2,820)	4.15 A	955
9+9+15	1.98	1.98	2.84	–	6.80 (1.90-8.06)	8.30	1,860 (340-2,460)	3.66 A	2.51	2.51	3.58	–	8.60 (3.28-10.50)	9.50	2,060 (590-2,810)	4.17 A	930
9+9+18	1.80	1.80	3.20	–	6.80 (2.00-8.46)	7.80	1,730 (340-2,460)	3.93 A	2.27	2.27	4.06	–	8.60 (3.20-10.60)	8.90	1,930 (570-2,710)	4.46 A	865
9+12+12	2.06	2.37	2.37	–	6.80 (1.90-8.13)	8.30	1,860 (340-2,460)	3.66 A	2.62	2.99	2.99	–	8.60 (3.27-10.50)	9.50	2,050 (590-2,800)	4.20 A	930
9+12+15	1.90	2.18	2.72	–	6.80 (1.90-8.15)	8.30	1,860 (340-2,460)	3.66 A	2.41	2.75	3.44	–	8.60 (3.27-10.50)	9.40	2,040 (580-2,790)	4.22 A	930
9+12+18	1.73	1.98	3.09	–	6.80 (2.00-8.53)	7.80	1,730 (340-2,460)	3.93 A	2.19	2.50	3.91	–	8.60 (3.17-10.60)	8.80	1,910 (570-2,680)	4.50 A	865
9+15+15	1.76	2.52	2.52	–	6.80 (1.90-8.17)	8.20	1,820 (340-2,460)	3.74 A	2.22	3.19	3.19	–	8.60 (3.26-10.50)	9.40	2,030 (580-2,780)	4.24 A	910
12+12+12	2.26	2.26	2.26	–	6.78 (1.90-8.21)	8.20	1,820 (340-2,460)	3.73 A	2.86	2.86	2.86	–	8.58 (3.26-10.50)	9.20	2,030 (580-2,770)	4.23 A	910
12+12+15	2.09	2.09	2.62	–	6.80 (1.90-8.23)	8.20	1,820 (340-2,460)	3.74 A	2.65	2.65	3.30	–	8.60 (3.25-10.50)	9.20	1,980 (580-2,760)	4.34 A	910
4 Units																	
7+7+7+7	1.70	1.70	1.70	1.70	6.80 (1.90-8.74)	7.60	1,690 (340-2,460)	4.02 A	2.15	2.15	2.15	2.15	8.60 (3.09-10.6)	8.60	1,870 (580-2,620)	4.60 A	845
7+7+7+9	1.59	1.59	1.59	2.03	6.80 (1.90-8.74)	7.60	1,690 (340-2,460)	4.02 A	2.01	2.01	2.01	2.57	8.60 (3.09-10.6)	8.60	1,870 (580-2,620)	4.60 A	845
7+7+7+12	1.53	1.53	1.53	2.21	6.80 (1.90-8.80)	7.40	1,650 (340-2,470)	4.12 A	1.93	1.93	1.93	2.81	8.60 (3.04-10.6)	8.60	1,850 (580-2,600)	4.65 A	825
7+7+7+15	1.41	1.41	1.41	2.57	6.80 (1.90-8.81)	7.40	1,650 (340-2,470)	4.12 A	1.78	1.78	1.78	3.26	8.60 (3.02-10.6)	8.50	1,840 (590-2,590)	4.67 A	825
7+7+9+9	1.50	1.50	1.90	1.90	6.80 (1.90-8.74)	7.60	1,690 (340-2,460)	4.02 A	1.89	1.89	2.41	2.41	8.60 (3.09-10.6)	8.60	1,870 (580-2,620)	4.60 A	845
7+7+9+12	1.44	1.44	1.83	2.09	6.80 (1.90-8.80)	7.40	1,690 (340-2,470)	4.02 A	1.82	1.82	2.32	2.64	8.60 (3.04-10.6)	8.60	1,850 (580-2,600)	4.65 A	845
7+7+12+12	1.39	1.39	2.01	2.01	6.80 (1.90-8.80)	7.40	1,650 (340-2,430)	4.12 A	1.75	1.75	2.55	2.55	8.60 (2.99-10.6)	8.50	1,830 (590-2,570)	4.70 A	825
7+9+9+9	1.40	1.80	1.80	1.80	6.80 (1.90-8.74)	7.60	1,690 (340-2,460)	4.02 A	1.79	2.27	2.27	2.27	8.60 (3.09-10.6)	8.60	1,870 (580-2,620)	4.60 A	845
7+9+9+12	1.36	1.73	1.73	1.98	6.80 (1.90-8.80)	7.50	1,680 (340-2,470)	4.05 A	1.72	2.19	2.19	2.50	8.60 (3.04-10.6)	8.60	1,850 (580-2,600)	4.65 A	840

FREE MULTI 4X1

OUTDOOR UNIT CU-4E27CBPG

Operating unit capacity	Cooling power (Kw) Room A	Room B	Room C	Room D	Total	R. Current A	Consumption W	EER	Heating power (Kw) Room A	Room B	Room C	Room D	Total	R. Current A	Consumption W	COP	A.C.E [1] kWh
1 Unit																	
7	2.20	–	–	–	2.20 (1.90-2.70)	2.25	450 (380-620)	4.89 A	3.20	–	–	–	3.20 (1.70-4.70)	3.85	840 (370-1,830)	3.81 A	225
9	2.80	–	–	–	2.80 (2.00-3.40)	2.95	620 (380-900)	4.52 A	4.00	–	–	–	4.00 (1.70-4.80)	5.40	1,210 (370-1,900)	3.31 C	310
12	3.20	–	–	–	3.20 (2.00-3.90)	3.40	720 (380-1,090)	4.45 A	4.50	–	–	–	4.50 (1.70-5.80)	5.85	1,310 (370-2,290)	3.44 B	360
15	4.00	–	–	–	4.00 (2.00-4.40)	4.60	1,030 (380-1,390)	3.88 A	5.60	–	–	–	5.60 (1.80-7.20)	8.35	1,900 (370-3,560)	2.95 D	515
18	5.00	–	–	–	5.00 (2.10-5.20)	7.15	1,610 (400-1,800)	3.11 B	7.10	–	–	–	7.10 (2.10-7.30)	12.40	2,840 (430-3,560)	2.50 F	805
2 Units																	
7+7	2.20	2.20	–	–	4.40 (2.10-5.00)	4.45	980 (400-1,260)	4.49 A	3.20	3.20	–	–	6.40 (1.80-9.40)	6.50	1,480 (400-3,550)	4.33 A	490
7 + 9	2.20	2.80	–	–	5.00 (2.10-6.10)	5.50	1,230 (400-1,880)	4.07 A	3.10	4.00	–	–	7.10 (2.10-9.40)	7.55	1,700 (420-3,510)	4.18 A	615
7+12	2.20	3.20	–	–	5.40 (2.20-7.00)	6.10	1,370 (400-2,790)	3.94 A	3.05	4.45	–	–	7.50 (2.20-9.80)	7.65	1,740 (420-3,490)	4.31 A	685
7+15	2.20	4.00	–	–	6.20 (2.20-7.10)	8.00	1,820 (400-2,790)	3.41 A	3.00	5.30	–	–	8.30 (2.40-9.80)	9.05	2,060 (440-3,440)	4.03 A	910
7+18	2.10	4.90	–	–	7.00 (2.50-7.20)	11.00	2,500 (460-2,800)	2.80 D	2.70	6.10	–	–	8.80 (3.20-9.90)	9.90	2,260 (530-3,400)	3.89 A	1,250
9+9	2.80	2.80	–	–	5.60 (2.20-6.90)	6.85	1,550 (400-2,780)	3.61 A	3.85	3.85	–	–	7.70 (2.30-9.40)	8.85	2,020 (440-3,480)	3.81 A	775
9+12	2.80	3.20	–	–	6.00 (2.20-7.00)	7.55	1,700 (400-2,790)	3.53 A	3.80	4.30	–	–	8.10 (2.40-9.80)	8.70	1,980 (440-3,460)	4.09 A	850
9+15	2.80	4.00	–	–	6.80 (2.20-7.10)	10.00	2,280 (400-2,790)	2.98 C	3.55	5.05	–	–	8.60 (2.10-9.80)	9.65	2,175 (530-3,390)	3.95 A	1,140
9+18	2.55	4.55	–	–	7.10 (2.50-7.20)	11.50	2,610 (460-2,800)	2.72 D	3.25	5.75	–	–	9.00 (3.20-9.90)	10.50	2,390 (530-3,370)	3.77 A	1,305
12+12	3.20	3.20	–	–	6.40 (2.20-7.30)	8.15	1,860 (400-2,810)	3.44 A	4.25	4.25	–	–	8.50 (2.50-10.10)	9.30	2,110 (470-3,390)	4.03 A	930
12+15	3.10	3.90	–	–	7.00 (2.50-7.30)	10.60	2,410 (460-2,810)	2.91 C	3.90	4.90	–	–	8.80 (3.20-10.10)	9.85	2,230 (530-3,340)	3.95 A	1,205
12+18	2.90	4.50	–	–	7.40 (2.60-7.40)	12.30	2,820 (460-2,880)	2.62 D	3.60	5.60	–	–	9.20 (3.20-10.10)	10.50	2,390 (530-3,300)	3.85 A	1,410
15+15	3.60	3.60	–	–	7.20 (2.50-7.30)	11.50	2,620 (460-2,810)	2.75 D	4.55	4.55	–	–	9.10 (3.20-10.10)	10.30	2,360 (530-3,320)	3.86 A	1,310
15+18	3.25	4.05	–	–	7.30 (2.70-7.40)	11.70	2,670 (480-2,820)	2.73 D	4.20	5.20	–	–	9.40 (3.20-10.20)	10.90	2,480 (530-3,300)	3.79 A	1,335
18+18	3.75	3.75	–	–	7.50 (2.80-7.60)	12.50	2,860 (480-2,870)	2.62 D	4.70	4.70	–	–	9.40 (3.50-10.20)	10.90	2,470 (590-3,290)	3.81 A	1,430
3 Units																	
7+7+7	2.20	2.20	2.20	–	6.60 (2.20-7.80)	7.40	1,660 (410-2,490)	3.98 A	2.87	2.87	2.87	–	8.61 (3.10-10.40)	8.80	1,990 (500-3,250)	4.33 A	830
7+7+9	2.15	2.15	2.70	–	7.00 (2.50-8.10)	8.25	1,890 (460-2,850)	3.70 A	2.70	2.70	3.40	–	8.80 (3.20-10.40)	8.85	2,010 (510-3,220)	4.38 A	945
7+7+12	2.10	2.10	3.10	–	7.30 (2.50-8.20)	8.70	1,980 (460-2,790)	3.69 A	2.60	2.60	3.70	–	8.90 (3.20-10.40)	8.95	2,030 (510-3,220)	4.39 A	990
7+7+15	2.05	2.05	3.70	–	7.80 (2.60-8.20)	10.30	2,330 (460-2,830)	3.35 A	2.40	2.40	4.40	–	9.20 (3.20-10.40)	9.50	2,150 (510-3,180)	4.28 A	1,165
7+7+18	1.85	1.85	4.30	–	8.00 (2.80-8.30)	10.80	2,460 (490-2,820)	3.25 A	2.20	2.20	5.00	–	9.40 (3.20-10.40)	9.30	2,120 (510-3,180)	4.43 A	1,230
7+9+9	2.10	2.65	2.65	–	7.40 (2.50-8.10)	9.40	2,140 (460-2,790)	3.46 A	2.50	3.25	3.25	–	9.00 (3.20-10.40)	9.20	2,090 (510-3,190)	4.31 A	1,070
7+9+12	2.00	2.60	3.00	–	7.60 (2.60-8.20)	9.85	2,240 (460-2,840)	3.39 A	2.45	3.15	3.60	–	9.20 (3.20-10.40)	9.30	2,110 (510-3,180)	4.36 A	1,120
7+9+15	1.95	2.50	3.55	–	8.00 (2.70-8.20)	11.00	2,510 (490-2,800)	3.19 B	2.30	2.90	4.20	–	9.40 (3.20-10.40)	9.50	2,160 (510-3,140)	4.35 A	1,255
7+9+18	1.75	2.25	4.00	–	8.00 (2.80-8.30)	10.80	2,460 (490-2,800)	3.25 A	2.05	2.65	4.70	–	9.40 (3.50-10.40)	9.15	2,080 (560-3,150)	4.52 A	1,230
7+12+12	2.00	2.95	2.95	–	7.90 (2.70-8.30)	10.10	2,290 (460-2,810)	3.45 A	2.40	3.45	3.45	–	9.30 (3.20-10.50)	9.40	2,130 (500-3,180)	4.37 A	1,145
7+12+15	1.90	2.70	3.40	–	8.00 (2.80-8.40)	10.40	2,380 (490-2,840)	3.36 A	2.20	3.20	4.00	–	9.40 (3.20-10.50)	9.50	2,150 (500-3,140)	4.37 A	1,190
7+12+18	1.70	2.45	3.85	–	8.00 (2.80-8.30)	10.90	2,470 (490-2,840)	3.24 A	2.00	2.90	4.50	–	9.40 (3.70-10.50)	9.55	2,170 (620-3,140)	4.33 A	1,235
7+15+15	1.70	3.15	3.15	–	8.00 (2.80-8.40)	10.40	2,380 (490-2,810)	3.36 A	2.00	3.70	3.70	–	9.40 (3.60-10.50)	9.30	2,110 (620-3,110)	4.46 A	1,190
7+15+18	1.60	2.85	3.55	–	8.00 (2.80-8.30)	10.90	2,470 (490-2,810)	3.24 A	1.85	3.35	4.20	–	9.40 (3.90-10.50)	9.30	2,120 (660-3,110)	4.43 A	1,235
7+18+18	1.40	3.30	3.30	–	8.00 (2.90-8.40)	10.70	2,430 (490-2,830)	3.29 A	1.70	3.85	3.85	–	9.40 (4.10-10.50)	9.55	2,170 (700-3,120)	4.33 A	1,215
9+9+9	2.60	2.60	2.60	–	7.80 (2.60-8.10)	10.80	2,450 (460-2,820)	3.18 B	3.08	3.08	3.08	–	9.24 (3.20-10.40)	9.55	2,170 (510-3,160)	4.26 A	1,225
9+9+12	2.55	2.55	2.90	–	8.00 (2.70-8.20)	11.00	2,510 (490-2,810)	3.19 B	3.00	3.00	3.40	–	9.40 (3.20-10.40)	9.65	2,190 (510-3,150)	4.29 A	1,255
9+9+15	2.35	2.35	3.30	–	8.00 (2.80-8.20)	11.00	2,510 (490-2,790)	3.19 B	2.75	2.75	3.90	–	9.40 (3.30-10.40)	9.40	2,140 (530-3,130)	4.39 A	1,255
9+9+18	2.10	2.10	3.80	–	8.00 (2.80-8.30)	10.80	2,460 (490-2,790)	3.25 A	2.50	2.50	4.40	–	9.40 (3.80-10.40)	9.20	2,100 (640-3,120)	4.48 A	1,230
9+12+12	2.40	2.80	2.80	–	8.00 (2.70-8.40)	10.40	2,380 (490-2,850)	3.36 A	2.90	3.25	3.25	–	9.40 (3.20-10.50)	9.55	2,170 (500-3,150)	4.33 A	1,190
9+12+15	2.25	2.55	3.20	–	8.00 (2.80-8.40)	10.40	2,380 (490-2,820)	3.36 A	2.65	3.00	3.75	–	9.40 (3.50-10.50)	9.40	2,130 (560-3,120)	4.41 A	1,190
9+12+18	2.05	2.30	3.65	–	8.00 (2.80-8.40)	10.30	2,340 (490-2,830)	3.42 A	2.40	2.70	4.30	–	9.40 (3.90-10.50)	9.50	2,150 (660-3,120)	4.37 A	1,170
9+15+15	2.10	2.95	2.95	–	8.00 (2.80-8.40)	10.40	2,380 (490-2,800)	3.36 A	2.40	3.50	3.50	–	9.40 (3.80-10.50)	9.05	2,060 (640-3,080)	4.56 A	1,190
9+15+18	1.90	2.70	3.40	–	8.00 (2.80-8.40)	10.30	2,340 (490-2,800)	3.42 A	2.20	3.20	4.00	–	9.40 (4.00-10.50)	9.20	2,100 (680-3,080)	4.48 A	1,170
9+18+18	1.70	3.15	3.15	–	8.00 (2.90-8.50)	10.30	2,340 (520-2,800)	3.42 A	2.10	3.65	3.65	–	9.40 (4.20-10.50)	9.40	2,140 (700-3,080)	4.39 A	1,170
12+12+12	2.66	2.66	2.66	–	7.98 (2.80-8.50)	10.10	2,300 (490-2,830)	3.47 A	3.13	3.13	3.13	–	9.39 (3.30-10.50)	9.50	2,160 (520-3,180)	4.35 A	1,150
12+12+15	2.45	2.45	3.10	–	8.00 (2.80-8.40)	10.50	2,390 (490-2,800)	3.35 A	2.90	2.90	3.60	–	9.40 (3.70-10.50)	9.40	2,140 (620-3,150)	4.39 A	1,195
12+12+18	2.25	2.25	3.50	–	8.00 (2.80-8.40)	10.50	2,390 (490-2,830)	3.35 A	2.65	2.65	4.10	–	9.40 (4.00-10.50)	9.40	2,130 (680-3,120)	4.41 A	1,195
12+15+15	2.30	2.85	2.85	–	8.00 (2.80-8.40)	10.50	2,390 (490-2,820)	3.35 A	2.70	3.35	3.35	–	9.40 (3.90-10.50)	9.30	2,120 (660-3,120)	4.43 A	1,195
12+15+18	2.10	2.60	3.30	–	8.00 (2.90-8.40)	10.30	2,350 (490-2,820)	3.40 A	2.45	3.10	3.85	–	9.40 (4.10-10.50)	9.20	2,100 (700-3,100)	4.48 A	1,175
12+18+18	1.90	3.05	3.05	–	8.00 (2.90-8.50)	10.30	2,350 (520-2,810)	3.40 A	2.30	3.55	3.55	–	9.40 (4.20-10.50)	9.05	2,060 (700-3,080)	4.56 A	1,175
15+15+15	2.66	2.66	2.66	–	7.98 (2.90-8.40)	10.50	2,390 (490-2,840)	3.34 A	3.13	3.13	3.13	–	9.39 (4.00-10.50)	9.20	2,100 (680-3,080)	4.47 A	1,195
15+15+18	2.45	2.45	3.10	–	8.00 (2.90-8.40)	10.50	2,390 (520-2,810)	3.35 A	2.90	2.90	3.60	–	9.40 (4.20-10.50)	9.15	2,080 (700-3,080)	4.52 A	1,195
4 Units																	
7+7+7+7	2.00	2.00	2.00	2.00	8.00 (2.70-8.80)	9.50	2,150 (490-2,840)	3.72 A	2.35	2.35	2.35	2.35	9.40 (3.20-10.50)	9.15	2,080 (550-3,140)	4.52 A	1,075
7+7+7+9	1.85	1.85	1.85	2.45	8.00 (2.80-8.80)	9.40	2,140 (490-2,880)	3.74 A	2.20	2.20	2.20	2.80	9.40 (3.20-10.50)	9.05	2,060 (550-3,120)	4.56 A	1,070
7+7+7+12	1.80	1.80	1.80	2.60	8.00 (2.80-8.90)	9.40	2,130 (490-2,880)	3.76 A	2.10	2.10	2.10	3.10	9.40 (3.40-10.50)	9.30	2,120 (590-3,180)	4.43 A	1,065
7+7+7+15	1.65	1.65	1.65	3.05	8.00 (2.80-8.90)	9.30	2,110 (490-2,870)	3.79 A	1.95	1.95	1.95	3.55	9.40 (3.80-10.50)	9.20	2,090 (640-3,140)	4.50 A	1,055
7+7+7+18	1.50	1.50	1.50	3.50	8.00 (2.80-8.90)	9.30	2,110 (490-2,840)	3.79 A	1.80	1.80	1.80	4.00	9.40 (4.00-10.50)	9.30	2,120 (680-3,110)	4.43 A	1,055
7+7+9+9	1.75	1.75	2.25	2.25	8.00 (2.80-8.80)	9.40	2,130 (490-2,870)	3.76 A	2.05	2.05	2.65	2.65	9.40 (3.50-10.50)	9.05	2,050 (610-3,110)	4.59 A	1,065
7+7+9+12	1.70	1.70	2.15	2.45	8.00 (2.80-8.90)	9.30	2,120 (490-2,870)	3.77 A	2.00	2.00	2.50	2.90	9.40 (3.70-10.50)	9.20	2,100 (620-3,160)	4.48 A	1,060
7+7+9+15	1.55	1.55	2.00	2.90	8.00 (2.80-8.90)	9.20	2,090 (490-2,840)	3.83 A	1.85	1.85	2.35	3.35	9.40 (3.90-10.50)	9.10	2,070 (660-3,110)	4.54 A	1,045
7+7+9+18	1.45	1.45	1.85	3.25	8.00 (2.90-8.90)	9.30	2,110 (520-2,880)	3.79 A	1.70	1.70	2.15	3.85	9.40 (4.10-10.50)	9.20	2,090 (700-3,100)	4.50 A	1,055
7+7+12+12	1.65	1.65	2.35	2.35	8.00 (2.80-8.90)	9.20	2,090 (500-2,870)	3.83 A	1.90	1.90	2.80	2.80	9.40 (3.80-10.50)	9.30	2,110 (640-3,190)	4.46 A	1,045
7+7+12+15	1.50	1.50	2.20	2.80	8.00 (2.80-8.90)	9.15	2,080 (500-2,840)	3.85 A	1.80	1.80	2.55	3.25	9.40 (4.00-10.50)	9.15	2,080 (680-3,150)	4.52 A	1,040
7+7+12+18	1.40	1.40	2.05	3.15	8.00 (2.90-9.00)	8.95	2,040 (520-2,860)	3.92 A	1.65	1.65	2.40	3.70	9.40 (4.10-10.50)	9.30	2,110 (700-3,080)	4.46 A	1,020
7+7+15+15	1.40	1.40	2.60	2.60	8.00 (2.90-9.00)	9.05	2,060 (520-2,850)	3.88 A	1.65	1.65	3.05	3.05	9.40 (4.10-10.50)	9.05	2,050 (700-3,110)	4.59 A	1,030
7+7+15+18	1.30	1.30	2.40	3.00	8.00 (2.90-9.00)	8.85	2,020 (520-2,880)	3.96 A	1.55	1.55	2.80	3.50	9.40 (4.20-10.50)	9.15	2,080 (700-3,060)	4.52 A	1,010
7+9+9+9	1.70	2.10	2.10	2.10	8.00 (2.80-8.80)	9.30	2,120 (490-2,850)	3.77 A	1.90	2.50	2.50	2.50	9.40 (3.80-10.50)	8.95	2,040 (640-3,080)	4.61 A	1,060
7+9+9+12	1.60	2.05	2.05	2.30	8.00 (2.80-8.90)	9.20	2,100 (490-2,850)	3.81 A	1.85	2.40	2.40	2.75	9.40 (3.90-10.50)	9.15	2,080 (660-3,130)	4.52 A	1,050
7+9+9+15	1.50	1.90	1.90	2.70	8.00 (2.80-8.90)	9.40	2,130 (490-2,860)	3.76 A	1.75	2.25	2.25	3.15	9.40 (4.00-10.50)	9.05	2,050 (680-3,080)	4.59 A	1,065
7+9+9+18	1.40	1.75	1.75	3.10	8.00 (2.90-8.90)	9.30	2,110 (520-2,860)	3.79 A	1.65	2.05	2.05	3.65	9.40 (4.20-10.50)	9.15	2,080 (700-3,080)	4.52 A	1,055
7+9+12+12	1.55	1.95	2.25	2.25	8.00 (2.80-8.90)	9.40	2,130 (500-2,850)	3.76 A	1.80	2.30	2.65	2.65	9.40 (4.00-10.50)	9.20	2,090 (680-3,180)	4.50 A	1,065
7+9+12+15	1.45	1.85	2.10	2.60	8.00 (2.90-9.00)	9.15	2,070 (520-2,860)	3.87 A	1.70	2.15	2.45	3.10	9.40 (4.10-10.50)	9.05	2,060 (700-3,120)	4.56 A	1,035
7+9+12+18	1.30	1.70	1.95	3.05	8.00 (2.90-9.00)	8.95	2,030 (520-2,840)	3.94 A	1.55	2.00	2.30	3.55	9.40 (4.20-10.50)	9.20	2,090 (700-3,080)	4.50 A	1,015
7+9+15+15	1.35	1.75	2.45	2.45	8.00 (2.90-9.00)	8.95	2,040 (520-2,870)	3.92 A	1.60	2.00	2.90	2.90	9.40 (4.20-10.50)	8.95	2,030 (700-3,080)	4.63 A	1,020
7+12+12+12	1.55	2.15	2.15	2.15	8.00 (2.80-9.10)	8.95	2,040 (500-2,870)	3.92 A	1.75	2.55	2.55	2.55	9.40 (4.00-10.60)	9.30	2,110 (680-3,120)	4.46 A	1,020
7+12+12+15	1.40	2.05	2.05	2.50	8.00 (2.90-9.10)	8.85	2,020 (520-2,840)	3.96 A	1.60	2.40	2.40	3.00	9.40 (4.10-10.60)	9.15	2,080 (700-3,080)	4.52 A	1,010
7+12+12+18	1.30	1.90	1.90	2.90	8.00 (3.00-9.20)	8.80	2,000 (530-2,870)	4.00 A	1.55	2.20	2.20	3.45	9.40 (4.20-10.60)	9.30	2,110 (700-3,060)	4.46 A	1,000
7+12+15+15	1.30	1.90	2.40	2.40	8.00 (2.90-9.10)	9.20	2,090 (520-2,860)	3.83 A	1.55	2.25	2.80	2.80	9.40 (4.20-10.60)	9.05	2,060 (700-3,060)	4.56 A	1,045
9+9+9+9	2.00	2.00	2.00	2.00	8.00 (2.80-8.80)	9.30	2,110 (490-2,840)	3.79 A	2.35	2.35	2.35	2.35	9.40 (3.90-10.50)	8.95	2,030 (660-3,080)	4.63 A	1,055
9+9+9+12	1.95	1.95	1.95	2.15	8.00 (2.80-8.90)	9.20	2,090 (490-2,870)	3.83 A	2.25	2.25	2.25	2.65	9.40 (4.00-10.50)	9.05	2,060 (680-3,100)	4.61 A	1,045
9+9+9+15	1.80	1.80	1.80	2.60	8.00 (2.90-8.90)	9.30	2,120 (520-2,850)	3.77 A	2.10	2.10	2.10	3.10	9.40 (4.10-10.50)	8.95	2,040 (700-3,070)	4.54 A	1,060
9+9+9+18	1.65	1.65	1.65	3.05	8.00 (2.90-8.90)	9.30	2,110 (520-2,850)	3.79 A	1.95	1.95	1.95	3.55	9.40 (4.20-10.50)	9.15	2,070 (700-3,070)	4.54 A	1,055
9+9+12+12	1.85	1.85	2.15	2.15	8.00 (2.90-9.00)	9.15	2,080 (500-2,870)	3.85 A	2.20	2.20	2.50	2.50	9.40 (4.00-10.50)	9.15	2,070 (680-3,140)	4.61 A	1,040
9+9+12+15	1.75	1.75	2.00	2.50	8.00 (2.90-9.00)	9.05	2,050 (520-2,880)	3.90 A	2.05	2.05	2.35	2.95	9.40 (4.20-10.50)	8.95	2,040 (700-3,080)	4.65 A	1,025
9+9+15+15	1.65	1.65	2.35	2.35	8.00 (3.00-9.00)	8.95	2,040 (520-2,860)	3.92 A	1.95	1.95	2.75	2.75	9.40 (4.20-10.50)	8.85	2,020 (700-3,070)	4.50 A	1,020
9+12+12+12	1.85	2.05	2.05	2.05	8.00 (2.90-9.10)	8.95	2,030 (520-2,860)	3.94 A	2.05	2.45	2.45	2.45	9.40 (4.10-10.60)	9.20	2,090 (700-3,100)	4.54 A	1,015
9+12+12+15	1.70	1.95	1.95	2.40	8.00 (2.90-9.10)	8.85	2,010 (520-2,880)	3.98 A	1.95	2.30	2.30	2.85	9.40 (4.20-10.60)	9.15	2,070 (700-3,080)	4.46 A	1,005
12+12+12+12	2.00	2.00	2.00	2.00	8.00 (2.90-9.20)	8.80	2,000 (530-2,850)	4.00 A	2.35	2.35	2.35	2.35	9.40 (4.20-10.60)	9.30	2,110 (700-3,080)	4.52 A	1,000
12+12+12+15	1.90	1.90	1.90	2.30	8.00 (3.00-9.20)	8.70	1,980 (530-2,870)	4.04 A	2.20	2.20	2.20	2.80	9.40 (4.20-10.60)	9.10	2,080 (700-3,060)	4.52 A	990

1)The annual consumption is calculated by multiplying the input power at 230V by an avarage of 500 hours per year in cooling mode.
A minimum of two units connected, minimum combination at 2x1: 7+9.

SELF DIAGNOSIS DESCRIPTION AND CHECK POINT TABLE

In the event of breakdown, proceed as follows to detect the error code.

1. Press "CHECK" button at the remote control continuously for more than five seconds to turn on diagnosis mode. "_ _" will be displayed at the remote control LCD.
2. By pressing the TIMER "▲" button once, the next error code (if any) will be displayed; press "▼" button once, previous error code will be displayed.
3. If error code displayed matches the error code saved in unit memory (abnormality detected) Indoor PCB will buzzer for 4 seconds to indicate the correct error code.
4. If "CHECK" button is pressed again or without any operation for 30 seconds, the diagnosis mode will turn off.
5. Turn ON the unit and reset the error code by pressing the AC reset.

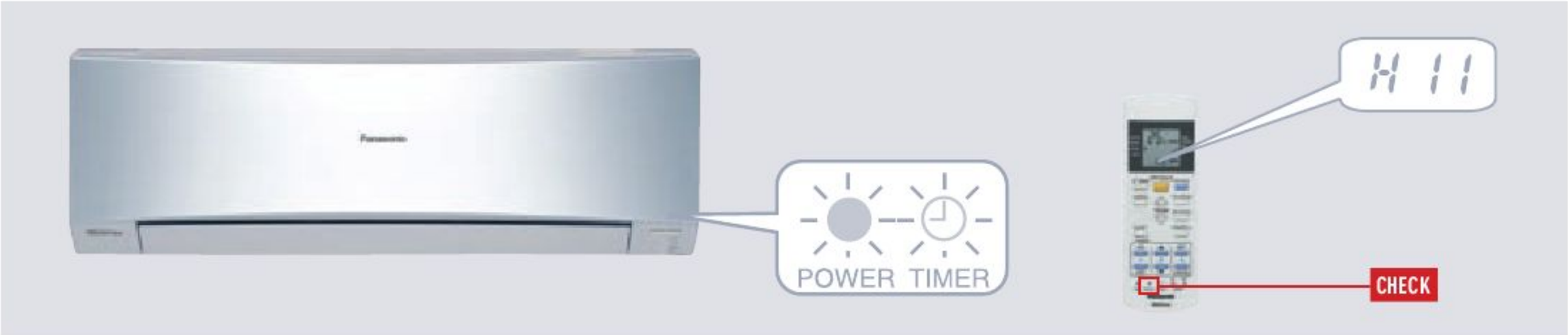

ERROR CODES TABLE

Warning: Electrical power must be disconnected when terminal protective cover is not in place to protect against electrocution.

Diagnosis Display	Abnormality / Protection Control	Diagnosis Method	Diagnosis Checkpoint
H11	Indoor/Outdoor abnormal communication	This trouble display appears when indoor/outdoor unit communication fails to be established after 30 or more seconds.	Measure the voltages of the indoor/outdoor unit communication cables, and check whether the voltage is being supplied properly to the outdoor unit or whether it is being returned from the outdoor unit to the indoor units.
H12	Indoor unit capacity unmatched	This trouble display appears when wrong in the total connection capacity and wrong connection in each capacity. The trouble is determined within 2 minutes after the power is turned on.	Check the total capacity of the units connected and check that the models are compatible for connection.
H14	Intake air temp. sensor	This trouble display appears when the intake air temperature has exceeded above 46°C continuously for 2 minutes or dropped below -54°C continuously for 5 seconds during operation.	This trouble display appears when a temperature which is impossibly high or low from a normal standpoint has been detected. Check the sensor, and if open-circuiting (0L or ∞) or short-circuit is not found, defective contact of the connector is to blame.
H15	Outdoor compressor temperature sensor abnormality	—	Check the sensor, and if open-circuit (more than 500 k) or (short-circuit) (less than 6.5 k) is not found, defective contact of the connector is to blame.
H16	Outdoor Current Transformer	CU-2E: When a value of under 1.5A has been detected for the total current during operation beyond the set capacity, the compressor operates with its operating frequency controlled to a maximum of 38Hz for 3 minutes, and if it continues to operate at a total current of under 1.5A for another 3 minutes, its operation stops. CU-3E/4E: When the total current has dropped below the set current level continuously for 20 seconds during operation beyond the set capacity, operation is stopped. Three minutes later, operation is started up again, and when the trouble occurs on 4 successive occasions, the trouble display appears (the timer lamp blinks).	1. Check the refrigerant cycle: Gas may be leaking (the amount of refrigerant is extremely low). 2. Check the control PCB: Check for a broken wire (open circuit) in the current transformer. (If an open circuit is found, replace the control PCB) In the case of a scroll compressor (DC motor), H16 is detected only when the regular compressor is operating.
H19	Indoor fan motor mechanism lock	· High-voltage PWM: When a state in which the fan motor speed is not synchronized with the control signal has been detected on 7 successive occasions. · Low-voltage PAM: When the fan lock detection signal has been detected on 7 successive occasions or it has been detected continuously for 25 seconds or when a state in which the fan motor speed is not synchronized with the control signal has been detected on 7 successive occasions: The trouble display appears (the timer lamp blinks).	1. Check the nature of the fan lockup trouble. 2. Check for disconnections of the fan motor connectors and for defects in contact, in the fan motor and in the control PCB.
H23	Indoor heat exchanger temp. sensor	This trouble display appears when a temperature of under approximately -40°C or above approximately 80°C has been detected by the heat exchanger temperature sensor continuously for 5 seconds. (This trouble is not detected during de-icing.)	This trouble display appears when a temperature which is impossibly high or low from a normal standpoint has been detected. Check the sensor, and if (open-circuit) (0L or ∞) or short-circuit is not found, defective contact of the connector or a defective control PCB is to blame.
H26	Ionizer Abnormality	—	1. Measure the voltages of the indoor unit communication cables, and check whether the voltage is being supplied properly. 2. Check the ionizer needle and grounding plate is dust free.
H27	Outdoor air temp. sensor	This trouble display appears when a temperature of under approximately -40°C or above approximately 150°C has been detected by the outside air temperature sensor for 2 to 5 seconds. (This trouble is not detected during de-icing.)	This trouble display appears when a temperature which is impossibly high or low from a normal standpoint has been detected. Check the sensor, and if open-circuiting (0L or ∞) or short-circuit isnot found, defective contact of the connector or a defective control PCB is to blame.
H28	Outdoor heat exchanger temp. sensor 1	This trouble display appears when a temperature of under approximately -60°C or above approximately 110°C has been detected by the heat exchanger temperature sensor for 2 to 5 seconds. (This trouble is not detected during de-icing.)	This trouble display appears when a temperature which is impossibly high or low from a normal standpoint has been detected. Check the sensor, and if open-circuiting (0L or ∞) or short-circuit is not found, defective contact of the connector or a defective control PCB is to blame.
H30	Outdoor discharge pipe temp. sensor	CU-2E: This trouble display appears when a temperature of under approximately -16°C or above approximately 200°C has been detected by the outlet temperature sensor for 2 to 5 seconds. CU-3E/4E: Disconnected discharge sensor · When the condensation temperature is higher than the discharge temperature + (plus) 6°C, a sensor disconnection is detected, operation stops, and the trouble display appears (the timer lamp blinks).	This trouble display appears when a temperature which is impossibly high or low from a normal standpoint has been detected. Check the sensor, and if open-circuiting (0L or ∞) or short-circuit is not found, defective contact of the connector or a defective control PCB is to blame.
H32	Outdoor heat exchanger temp. sensor 2 (discharge pipe temp.)	This trouble display appears when a temperature of under approximately -60°C or over approximately 110°C has been detected continuously for 2 to 5 seconds by the outlet temperature sensor of the heat exchanger.	This trouble display appears when a temperature which is impossibly high or low from a normal standpoint has been detected. Check the sensor, and if open-circuiting (0L or ∞) or short-circuit is not found, defective contact of the connector or a defective control PCB is to blame.
H33	Indoor / Outdoor wrong connection	Indoor / Outdoor different model junction, 100V charge into 200V outdoor unit.	Check whether the voltage is being supplied properly to the outdoor unit or whether it is being returned from the outdoor unit to the indoor units.
H34	Outdoor heat sink temp. sensor	This trouble display appears when a temperature of under -43°C or above 80°C has been detected by the outdoor unit radiator fin sensor continuously for 2 seconds.	This trouble display appears when a temperature which is impossibly high or low from a normal standpoint has been detected. Check the sensor, and if open-circuiting (0L or ∞) or short-circuit is not found, defective contact of the connector or a defective control PCB is to blame.
H36	Abnormal gas pipe temp. sensor	This trouble display appears when a temperature of under approximately -45°C or above approximately 149°C has been detected by the outdoor unit gas side pipe temperature sensor continuously for 2 to 5 seconds.	This trouble display appears when a temperature which is impossibly high or low from a normal standpoint has been detected. Check the sensor, and if open-circuiting (0L or ∞) or short-circuit is not found, defective contact of the connector or a defective control PCB is to blame.
H37	Outdoor liquid pipe temp. sensor	This trouble display appears when a temperature of under -45°C or above 149°C has been detected by the outdoor unit liquid side pipe temperature sensor continuously for 2 seconds.	This trouble display appears when a temperature which is impossibly high or low from a normal standpoint has been detected. Check the sensor, and if open-circuiting (0L or ∞) or short-circuit is not found, defective contact of the connector or a defective control PCB is to blame.
H38	Indoor / Outdoor mismatch (brand code)	—	—
H39	Abnormal indoor operating unit or standBy units	This display appears in rooms other than one in which indoor freezing trouble has occurred when the pipes have been connected incorrectly, when an outdoor expansion valve is defective or when an expansion valve connector has become disconnected.	—

H41	Abnormal wiring or piping connection	CU-2E only This display appears when this kind of trouble is detected 3 minutes after a forced cooling operation was conducted for one room during the initial operation after the power was turned on. It appears when: • The indoor unit pipe temperature in a room without the capacity supply available at an outside air temperature above 5°C has dropped by more than 20°C to 5°C or lower 3 minutes after the compressor started up. • The outdoor unit gas pipe temperature in a room without the capacity supply available has dropped by more than 5°C to 5°C or lower 3 minutes after the compressor started up.	—
H50	Ventilation failure	This display appears when ventilation motor is lock.	1. Check the voltage drop at pin 1 & 2 of CNVENT to have 14Vdc. 2. Check the ventilation hose condition from ventilation opening until tip cover. 3. Check air fl ow from tip cover by hand.
H51	Vacuum Nozzle Failure	This display appears when the vacuum nozzle stop.	This trouble display appears when suction nozzle stop at centre of the Filter Cleaning device: 1. Check the filter setting position. 2. Check the nozzle drive stepper motor running condition. This trouble display appears when suction nozzle stop at left side of Filter Cleaning device: 1. Check vacuum nozzle position. 2. Check the left limit switch switching function by multitester. This trouble display appears when suction nozzle stop at left side of Filter Cleaning Device: 1. Check the Right Limit Switch switching function by multitester.
H52	Limit Switch Failure	This display appears when both Limit Switch (left & right) detected short circuit.	1. Unplug the CNSIDESW connector and check Pin 1-2 and Pin 3-4 condition on PCB. 2. Check wiring condition at limit switch (left & right). 3. Check switching function of limit switch (left & right).
H97	Outdoor fan motor mechanism lock	CU-2E: When trouble, which is defi ned as a state in which the fan motor speed is not synchronized with the control signal has been detected on 5 successive occasions, has occurred for the third time in a 60-minute period and twice during a 30-minute period, the trouble display appears, and operation stops. CU-3E/4E: When the fan motor speed detected when its maximum output is demanded is below 30 rpm continuously for 15 seconds, the fan motor stops for 3 minutes and then restarted. When this happens on 16 occasions (the trouble display is cleared when the value is normal for 5 minutes), the H97 diagnostic symbol is stored in the memory, and the fan motor stops.	1. Check the nature of the fan lockup trouble. 2. Check for disconnections of the fan motor connectors and for defects in contact, in the fan motor and in the control PCB.
H98	Indoor high pressure protection	The restriction on the compressor frequency is started when the temperature of the indoor unit heat exchanger source is between 50°C and 52°C, the compressor stops at a temperature from 62°C to 65°C, it is restarted 3 minutes later at below 62°C to 65°C, and the restriction on the compressor frequency is released at a temperature between 48°C and 50°C. (No trouble display appears.)	1. Check the indoor unit heat exchanger temperature sensor (check for changes in its characteristics and check its resistance): Symptoms include no hot start when operation is started, a failure of the thermostat to turn on (no outdoor unit operation). And frequent repetition of stopping and startup. 2. Check also for short circuits indoors and clogging of the air fi lters.
H99	Indoor operating unit freezing	The restriction on the compressor frequency is started when the indoor unit heat exchanger temperature is between 8°C and 12°C. Operation stops if a temperature below 0°C continues for 6 minutes. Three minutes later, operation is started up at a temperature from 3°C to 8°C. The restriction on the compressor frequency is released at a temperature between 13°C and 14°C.	1. A cooling or dry mode operation conducted at a low outside air temperature is mainly to blame: this is not indicative of any malfunctioning. If the outside air temperature rises during automatic operation in the winter months, the dry mode operation is selected. The H99 diagnostic display also appears at such a time. 2. Check the refrigerating cycle: Gas may be leaking (the amount of refrigerant is low) or a pipe may be broken, etc. 3. Check also for short circuits indoors and clogging of the air fi lters.
F11	4-way valve switching failure	CU-2E: When the indoor unit heat exchanger temperature is under -5°C during a warming operation or above 45°C during a cooling or dry mode operation four minutes after the compressor has started up, the F11 diagnostic symbol is stored in the memory, and operation stops. 3 minutes later, operation is restarted. This trouble display appears when this happens on 4 occasions in a 30 minutes period. CU-3E/4E: When a difference of 0°C to 5°C has been detected between the outdoor unit heat exchanger temperature and liquid side pipe temperature on 5 occasions, the trouble display appears.	1. Check the 4-way valve coil: Check that no power is supplied to the coil during cooling and dry mode operations, and that power is supplied during heating operations. Inspect the coil for broken wires (open circuits). 2. If the coil is troublefree, the switching action of the 4-way valve may be defective.
F17	Indoor standBy units freezing	CU-2E: After the operation of one indoor unit stops continuously for 5 minutes. The hole operation stops when the stopping indoor unit pipe temperature is under -5°C continuously for 1 minute or under 0°C continuously for 5 minutes, and operation restarts after 3 minutes. This trouble display appears if that trouble happens on 3 occasions in a 30 minutes period. CU-3E/4E: When the difference of an intake temperature (room temperature sensor) and the indoor unit heat exchanger temperature (piping sensor) is higher than 10°C or an indoor unit heat exchanger temperature of below -1°C has been detected continuously for 5 minutes, operation stops. Three minutes later, it is started up, and the trouble display appears when this has occurred on 3 consecutive occasions.	1. Check the refrigerating cycle: Expansion valve leakage. 2. Check the indoor unit pipe temperature sensor (check for changes in its characteristics and check its resistance).
F90	PFC circuit protection (CU-2E) Main circuit low voltage (CU-3E/4E)	CU-2E: When the rotation of the compressor is not synchronized with the control signal, the F90 diagnostic display is stored in the memory, and operation stops. 3 minutes later, operation is restarted. This trouble display appears when this happens on 4 occasions in a 10-minutes period. * With the multi 53 or above, it appears when this happens on 16 occasions. CU-3E/4E: When a DC voltage below 305V to 328V has been detected on 16 occasions, this trouble display appears.	1. To check whether the 2-way or 3-way valve has been left open by mistake, operation is performed for one to several minutes after the compressor has started up, F93 is stored in the memory as the symptom, and operation stops. 2. Check the inverter circuit (for open circuits) in the control PCB: Check the IPM base current (6 locations) within 3 minutes after the power has been turned back on. As the symptom, F93 is stored in the memory 30 seconds after the compressor has started up, and operation stops. The trouble display appears after 4 restarts. 3. Check for broken wires (open circuits) in the compressor winding: Approximately 1 ohm under normal conditions for each phase (same symptom as in 2.). 4. Check the power supply voltage has been down or not.
F91	Refrigeration cycle abnormality	CU-2E: When the rotation speed of the compressor exceeds the setting frequency and the total current is 1.5A or higher to 1.9A or lower continuously for 5 minutes, operation stops if the indoor unit heat exchanger temperature is higher than 20°C during cooling or dry operation or if it is under 25°C during heating. Three minutes later, it is restarted, and if the trouble occurs on 2 consecutive occasions in a 20 minutes period, the trouble display appears. CU-3E/4E: When the compressor frequency is above 55 Hz and the current drops below the prescribed level continuously for 7 minutes, operation stops, and it is restarted 3 minutes later. When the compressor discharge temperature has exceeded the setting and the expansion valve has remained fully open for 80 seconds, operation stops, and it is restarted 3 minutes later. When the stopping described above has occurred on 4 occasions, operation stops, and the trouble display appear.	Check the refrigerating cycle: Gas may be leaking (more than onehalf of the volume of the gas has gone). The diagnostic displays resulting from a gas leak generally change in the following sequence depending on the extent of the gas leak: H99 ˙ F97 ‡ F91 ‡ H16. The range of this trouble (F91) is limited. (Compressor protection at the start of the season).
F93	Compressor abnormal revolution	CU-2E: When the reputation of the compressor is not synchronized with the control signal, the F93 diagnostic display is stored in the memory, and operation stops. 3 minutes later, operation is restarted. This trouble display appears when this happens on 4 occasions in a 20 minutes period. CU-3E/4E: When a state in which the rotation of the compressor is not synchronized with the control signal has been detected on 8 successive occasions, operation stops, and the trouble display appears.	1. To check whether the 2-way or 3 -way valve has been left open by mistake, operation is performed for one to several minutes after the compressor has started up, F93 is stopped in the memory as the symptom, and operation stops. 2. Check the inverter circuit (for open circuits) in the control PCB: Check the IPM base current (6 locations) within 3 minutes after the power has been turned back on. As the symptom, F93 is stored in the memory 30 seconds after the compressor has started up, and operation stops. The trouble display appears after 4 restarts. 3. Check for broken wires (open circuits) in the compressor winding: Approximately 1 ohm under normal conditions for each phase (same symptom as in 2.)
F95	Outdoor high pressure protection	CU-2E only: When the temperature of the outdoor unit heat exchanger temperature sensor exceeds 63°C, the F95 diagnostic symbol is stored in the memory, and operation stops. 3 minutes later, operation is restarted at a temperature below 56°C. This trouble display appears when this happens on 4 occasions in a 20-minutes period.	1. Check the outdoor unit heat exchanger temperature sensor (check for changes in its characteristics and check its resistance). 2. Check whether something is interfering with the dissipation of the heat outdoors.
F96	Power transistor module or compressor overheating (CU-2E) Compressor high discharge temperature (CU-3E/4E)	CU-2E: Heating is detected inside the IPM which shuts itself off, the F96 diagnostic symbol is stored in the memory, and operation stops. 3 minutes later, operation is restarted. The trouble display appears when this happens on 4 occasions in a 30-minutes period. CU-3E/4E: When this trouble is detected from the electrical parts radiation fi n temperature sensor and OLP output during operation, operation stops, and it is restarted 3 minutes later. If the trouble occurs on 4 occasions, operation stops, and the trouble display appears.	1. Something may be interfering with the dissipation of the heat outdoors or the outdoor unit fan may be defective. (The outdoor unit fan is not running.). 2. Defective IPM (outdoor unit control PCB). 3. Gas leaks. 2-way or 3-way valve is not opened.
F97	Compressor high discharge temperature	When the temperature of the compressor temperature sensor exceeds 112 to 120°C, the F97 diagnostic symbol is stored in the memory, and operation steps. Two minutes later, operation is restarted at a temperature below 107 to 110°C. CU-2E: The trouble display appears and operation stops when this happens on 4 occasions in a 20 minutes period. CU-3E/4E: This trouble display appears and operation stops when this happens on 6 occasions (it is cleared when the operation is normal for 20 minutes).	1. Check the refrigerating cycle: Gas may be leaking (the amount of refrigerant is low). The stopping of the outdoor unit from time to time is a symptom of this trouble. 2. When operation steps with this trouble display appearing, check the compressor temperature sensor (check for changes in its characteristics and check its resistance). 3. Something may be interfering with the dissipation of the heat outdoors or the outdoor unit fan may be defective. (The fan will not run because of an open circuit.) (The protection function may be activated by an overload, and the F97 trouble display will remain stored in the memory.).
F98	Total running current protection	CU-2E: When the total current exceeds the setting, the F98 diagnostic display is stored in the memory, and operation stops. 3 minutes later, operation is restarted. The trouble display appears and operation stops when this happens on 3 occasions in a 20-minutes period. CU-3E/4E: When the total current exceeds the setting (17A to 20A), frequency control is started, and if it then exceeds the setting, operation stops, and the trouble display appears.	1. Check the AC voltage at the outdoor unit terminal board during operation: The voltage drop must be within 5% of the voltage when operation has stopped (± 110% of rated voltage even during operation). If the voltage drop exceeds 5% or if the voltage changes suddenly, inspect whether the power supply cord and indoor/outdoor unit connection cables are too long or too small in diameter, etc. 2. Check whether something is interfering with the dissipation of the heat outdoors (during cooling operations): Normally, the capacity is limited by the current so that the outdoor unit don't stop, and the diagnostic display does not appear.
F99	DC peak detection	CU-2E: If the current level exceeds 22.5A after startup, the compressor stops, and it is restarted 3 minutes later. When this occurs on 7 consecutive occasions, operation stops, and the trouble display appears. CU-3E/4E: When "Output current trouble", which occurs when the prescribed current level is exceeded, has occurred on 16 consecutive occasions, operation stops, and the trouble display appears.	1. Check whether the compressor is defective (locked up or shorted winding). Check the outdoor unit control PCB.

COMMERCIAL AIR CONDITIONING FROM PANASONIC. PROFESSIONAL SOLUTIONS FOR ALL TYPES OF PROJECTS

THE WIDEST RANGE OF AIR CONDITIONERS, WHERE YOU WILL FIND THE IDEAL SOLUTION FOR CREATING THE CLIMATE IN YOUR HOME, OFFICE OR BUSINESS.

Welcome to Commercial air conditioning. Welcome to healthier air. A range which confirms its commitment to the environment. All our air conditioners use R410A gas. This environmentally friendly gas is totally harmless for the ozone layer. Our Inverter compressors optimise performance and thus reduce energy costs.
Here are some of your new air conditioner's major features.

www.panasonic.eu

INVERTER +

INVERTER

SUPER
ALLERU-BUSTER FILTER

EUROVENT CERTIFIED AND GUARANTEED

COMMERCIAL RANGES

LOW STATIC PRESSURE HIDE-AWAY FS TYPE

Panasonic has also thought of integrating its technology into current architecture. Hide-away models are the answer. The small-sized indoor units are easily accommodated in false ceilings.

HIGH STATIC PRESSURE HIDE-AWAY FS TYPE

Panasonic has developed hide-away units with high static pressure power, ideal for business centres.

60X60 CASSETTE TYPE

Panasonic's 60x60 cassettes are particularly suitable for small or medium-sized offices. Their dimensions fit perfectly into European 60x60 detachable ceiling panels.

90X90 FS CASSETTE TYPE

Panasonic has developed air conditioners with revolutionary designs in both format and function. As an added benefit, they offer the option of selecting airflow patterns in two or four different directions, at the click of a button.

CEILING TYPE

Especially suited for shopping centres or very large areas, these air conditioners are practically invisible due to their slimness, lightness and absolutely silent operation.

HIGH PRESSURE HIDE-AWAY US TYPE

Panasonic has developed hide-away units with high static pressure power, ideal for business centres.

INVERTER +	INVERTER	HEAT PUMP

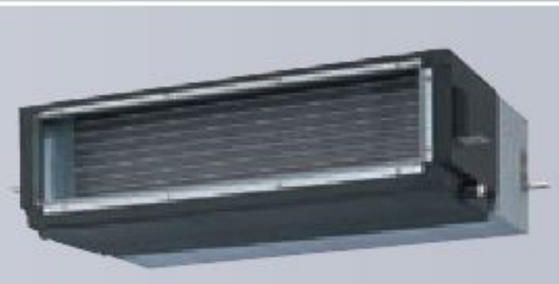
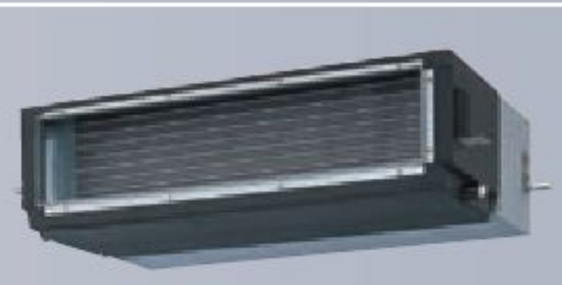
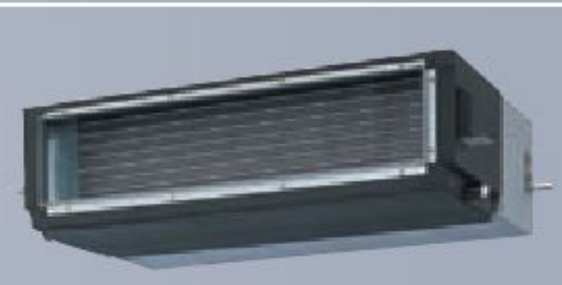

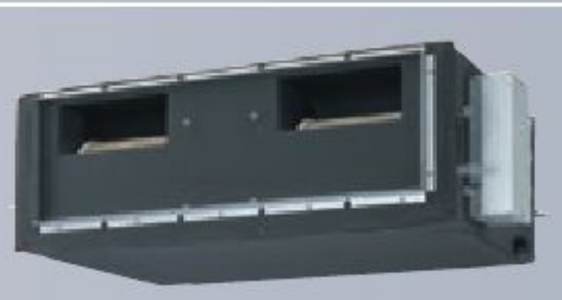
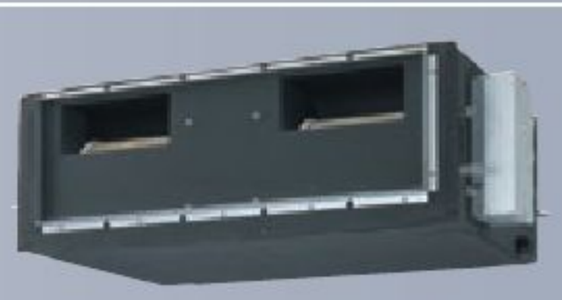

CE

QUALITY SYSTEM SIRIM

ISO 9000 Series Certification

CERTIFIED TO MS ISO 9002:1994
Panasonic HA Air-Conditioning (M) Sdn. Bhd. (PHAAM)
(Fomerly know as Matsushita Industrial Corp. Sdn. Bhd.)
Registration No.: AR 0866

ENVIRONMENTAL SYSTEM SIRIM

UKAS ENVIRONMENTAL MANAGEMENT 074

Enviroment Management Systems Approval Certificate

CERTIFIED TO MS ISO 14001:1997
Panasonic HA Air-Conditioning (M) Sdn. Bhd. (PHAAM)
(Fomerly know as Matsushita Industrial Corp. Sdn. Bhd.)
Certification No.: M015802127

PANASONIC AIR CONDITIONING

MORE COMPACT, EFFICIENT AND EASY TO INSTALL. PANASONIC'S AIR CONDITIONERS OFFER MAXIMUM SAVINGS IN EVERY WAY

FS TECHNOLOGY

FS INVERTER, IMPROVED ENERGY PERFORMANCE

All Panasonic's FS Inverter series models are equipped with DC Inverters to give operation with improved energy efficiency. Their new quiet, highly efficient design reduces operating costs.

1. **Hyper Wave Inverter**
The FS series quickly warms the room up to the set temperature and maintains it within the comfort zone while ensuring energy efficiency and savings.

2. **High efficiency compressor**
A powerful neodymium magnet helps make the motor more compact.

3. **New diagonal fan**
The following improvements minimise air resistance:

REDUCING AIR RESISTANCE

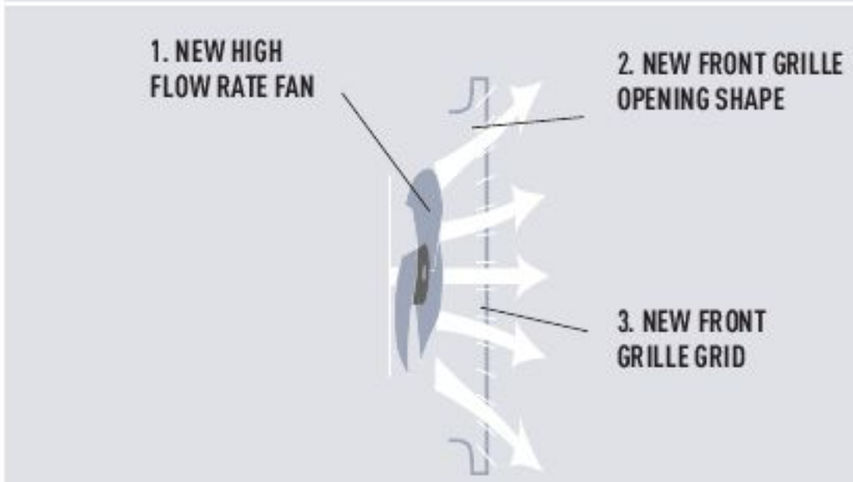

SPACE-SAVING DESIGN

Thanks to its improved fan, the outdoor unit can be installed in smaller spaces where conventional models would not fit. It achieves higher efficiency without sacrificing quietness.

ONLY NEEDS

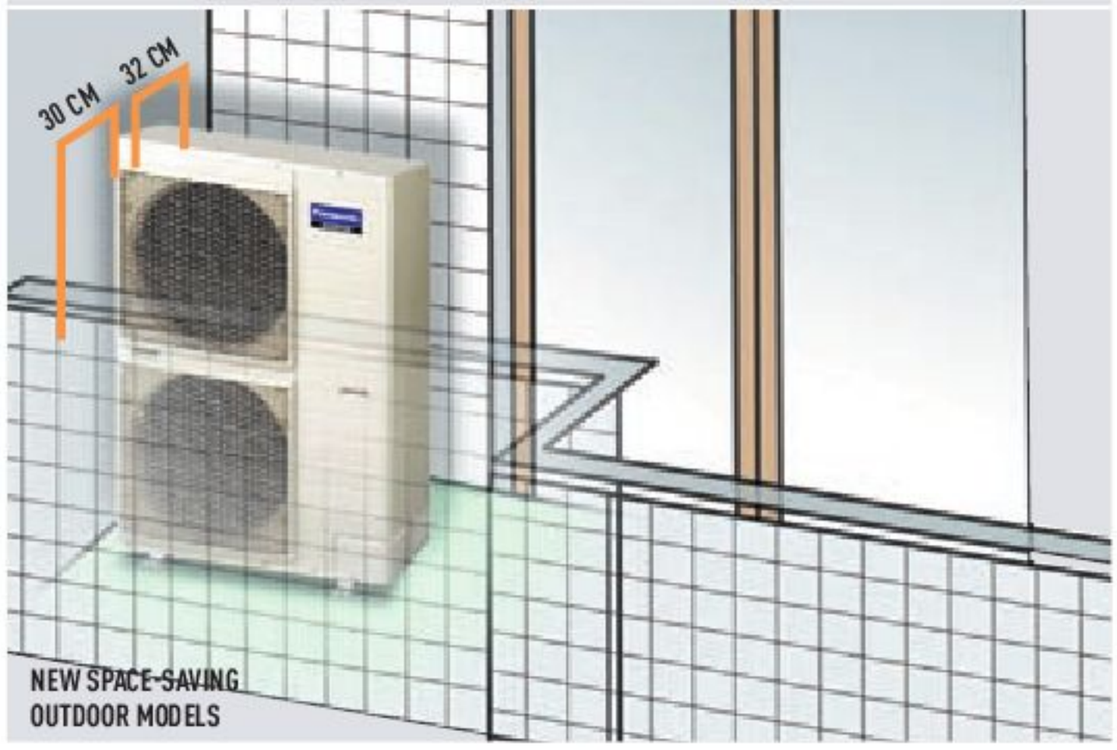

CONTROL UNIT

MAXIMUM COMFORT IN EVERY DETAIL THE PANASONIC FS SERIES INCLUDES A CONTROL UNIT FOR PRECISE SELECTION OF THE DESIRED DEGREE OF COMFORT. IT OFFERS CONTROL OF DETAILED PARAMETERS FOR ADJUSTING AIR QUALITY AND FLOW.

1. MULTI COMFORT AIR CONTROL

Newly developed control technology offers various airflow angle options. Select from the 3-pattern auto swings to avoid direct exposure to the air (total 50-degree swing width).

FS INDOOR UNITS

HIDE-AWAY RANGE

Environmentally friendly, efficient and easy to install.

- Save 26% of space.
- Easy installation in false ceilings with limited height.
- Dimensions: 120 x 25 x 65 cm (W x H x D).

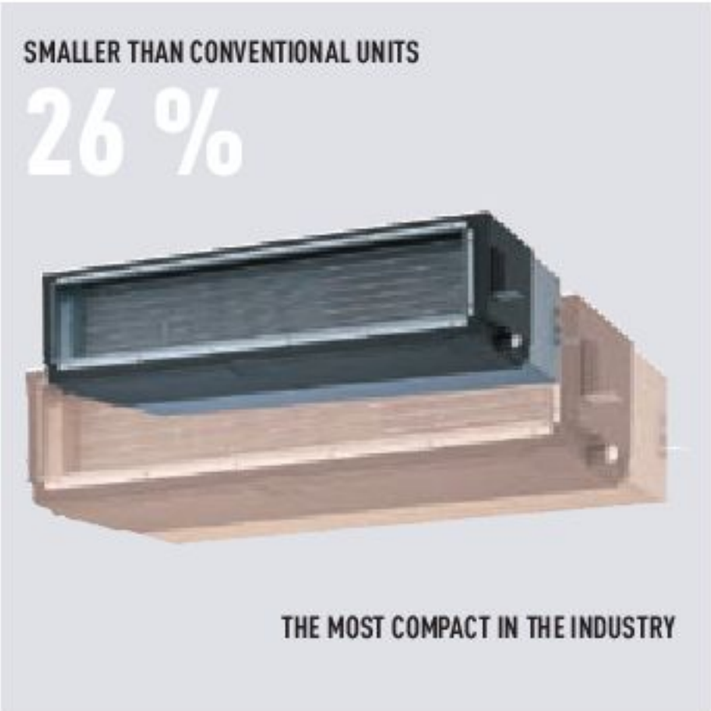

NEW SIROCCO FAN

High-performance, large diameter fan. Designed precisely for airflow trajectory. The key to saving space.

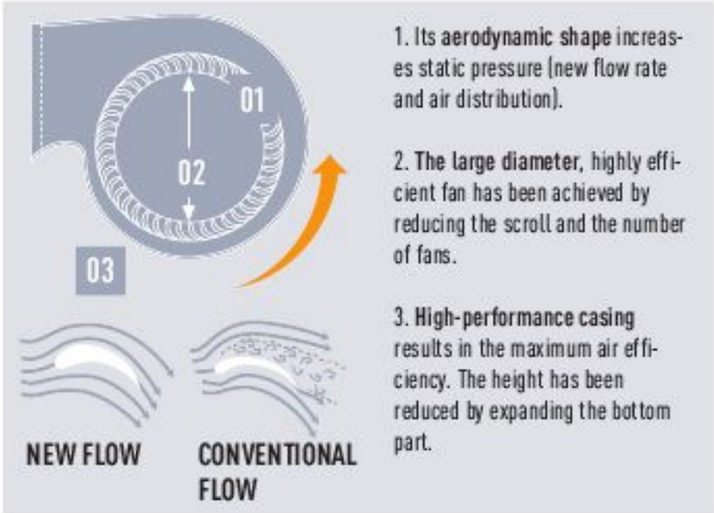

CASSETTE RANGE

Advanced unit design: First-in-class indoor unit

- Selectable airflow rate and direction.
- Silent operation.
- Customised programming.

The indoor cassette unit is equipped with a hi-tech turbo fan. Its innovative blade design produces higher air speed and flow rate. The DC fan motor offers complete control. It is almost twice as efficient as a conventional motor and enables comfortable operation and energy savings.
Likewise, the possibility of connecting two indoor units to one outdoor unit means considerable savings across the board.

IMPROVED AIR INLET AND OUTLET

The new three-dimensional blade shape stabilises airflow.
Optimising layout of the indoor heat exchanger and the fan allows an increase in fan diameter.

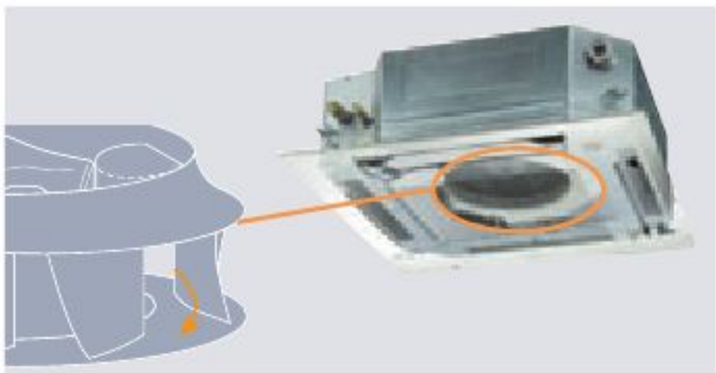

CEILING RANGE

Trouble-free installation

- Easy setup.
- Multi-way connection.
- Broad range of air outlets.

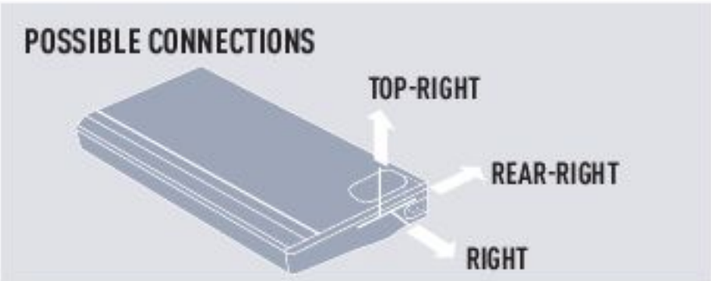

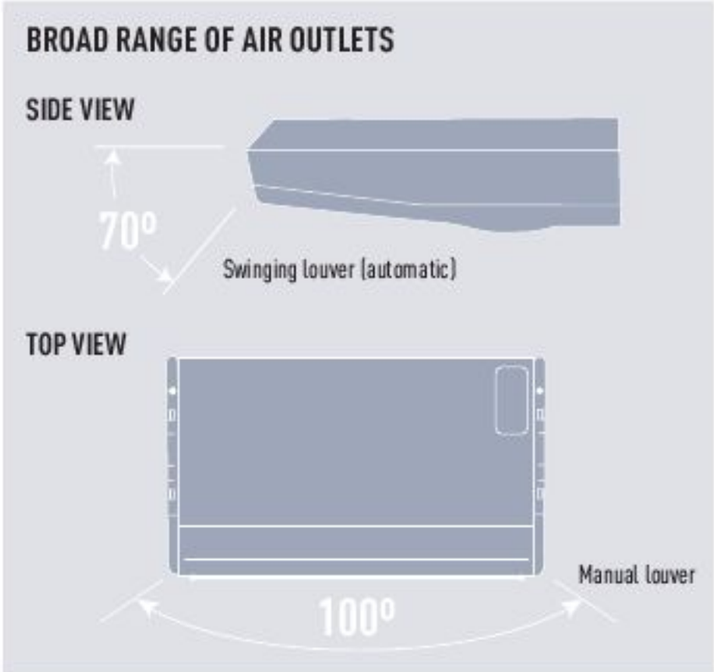

2. WEEKLY TIMER

Weekly timer setting (each day of a week) is available to control the air conditioner. Max. 6 settings/day and 42 settings/week can be run.

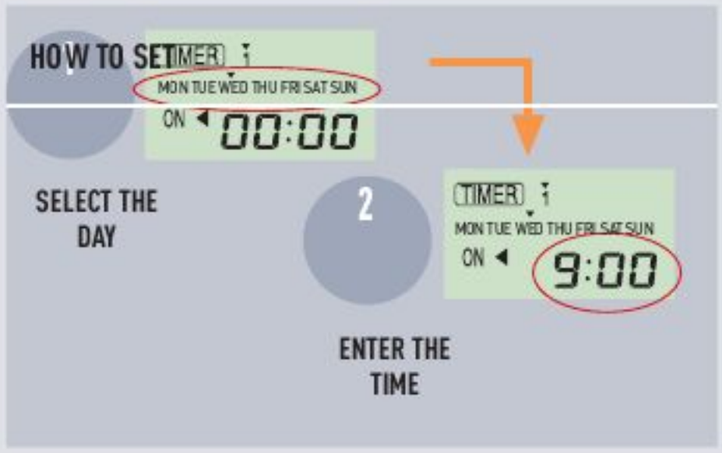

3. ODOUR WASH

Odour Wash reduces any unpleasant odours produced by the air conditioner's heat exchanger.

4. ECONOMY MODE

An approximate 20% energy-saving operation is achieved. The air conditioner analyses ambient conditions and approaches the temperature set by the user in 0.5 degree steps (up to a maximum of 2 degrees), thus saving energy.

5. VENTILATION

When an external device such as a fan is connected to the indoor unit, the fan's ON/OFF switch can be controlled by the wired remote control.

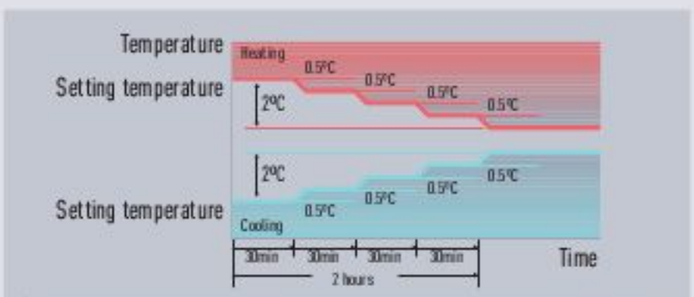

* During operating in the cooling mode at the remote control set temperature of 25 under the cooling standard temperature conditions.
Can be operated with the wireless remote control.

INVERTER + OUTDOOR UNITS

- GREATER ENERGY SAVINGS
- MORE INSTALLATION OPTIONS
- QUIETER

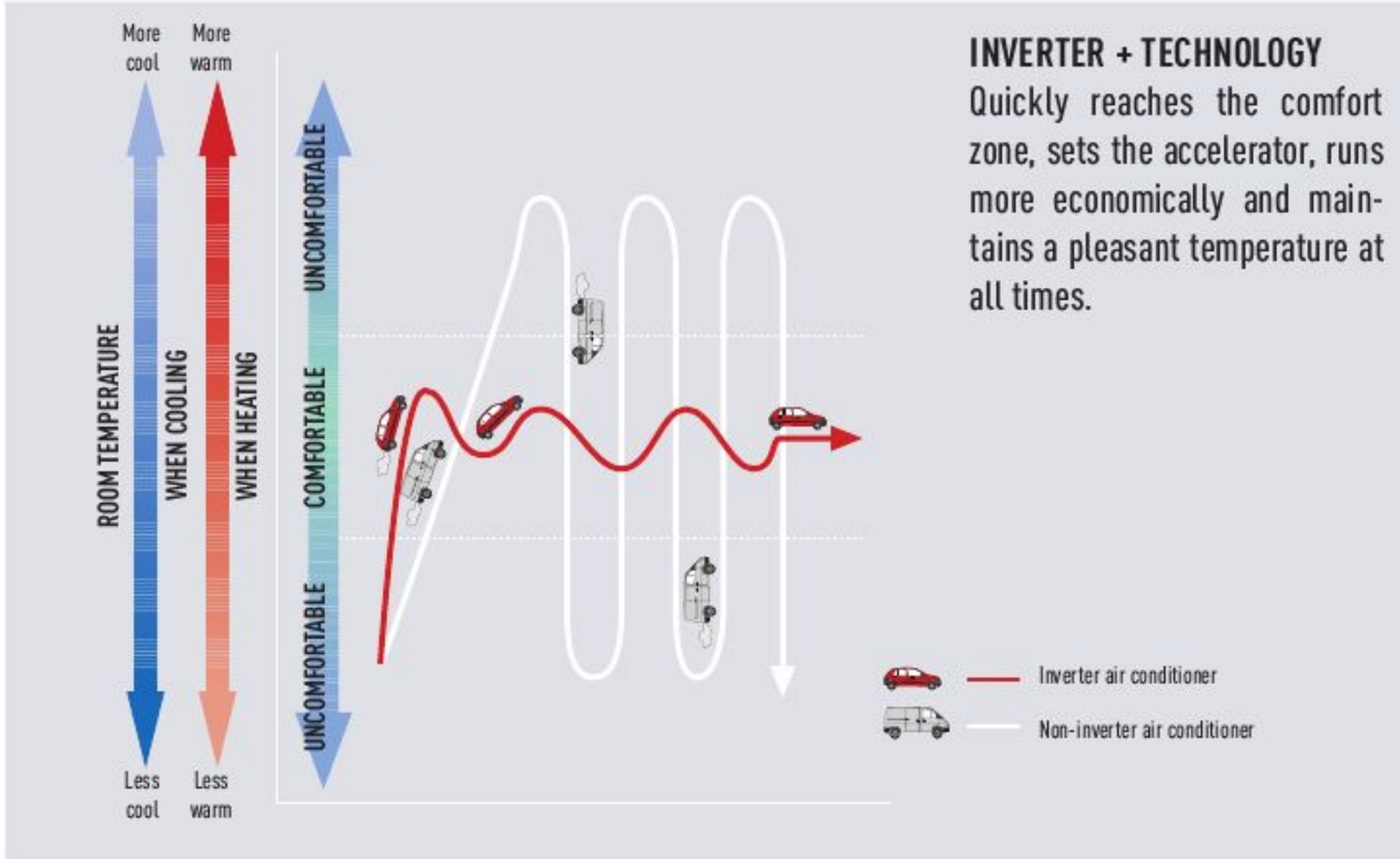

INVERTER + TECHNOLOGY
Quickly reaches the comfort zone, sets the accelerator, runs more economically and maintains a pleasant temperature at all times.

High efficiency compressor

COMPRESSOR OPERATION INVERTER / HEAT PUMP

Inverter / Heat Pump

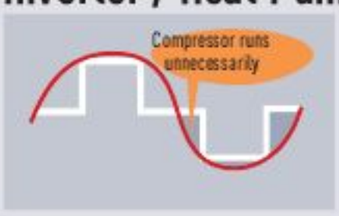

The heat pump waveform deviates from the motor waveform, so power is wasted.

Hyper wave Inverter

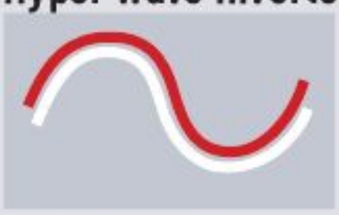

The compressor speed pattern perfectly fits the thermal needs at all times.

COMPARE THIS TO A CAR ROUNDING A CORNER

Power is lost when the car swings off course.

When the car stays on course, there is no power loss.

ENERGY-SAVING OPERATION
THE NEW DESIGN PROVIDES QUIET, HIGHLY EFFICIENT OPERATION AND REDUCES RUNNING COSTS.

HIGH EFFICIENCY COMPRESSOR
THE NEW ELECTRIC MOTOR ACHIEVES LOWER DISTORTION OF THE MAGNETIC FIELD TO GIVE GREATER EFFICIENCY.

INVERTER + INSTALLATION FLEXIBILITY

INSTALLATION WITH SIGNIFICANT HEIGHT DIFFERENCES WITHOUT LOSS OF EFFICIENCY.

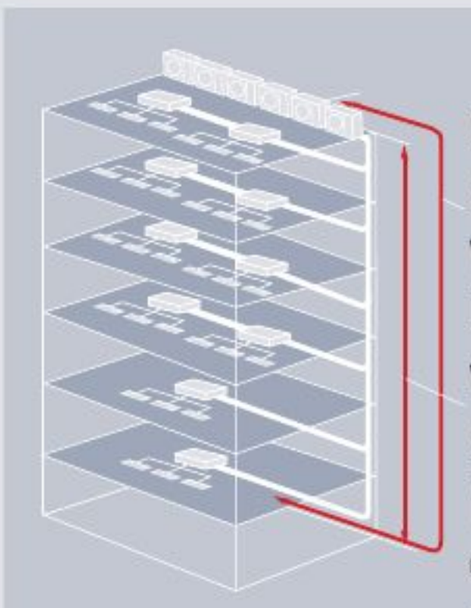

Maximum pipe lenght of 30 m without additional load and 50 m with additional load.
Maximum height difference of 50 m equivalent to 17/18 floors.

NEW MORE COMPACT OUTDOOR UNITS SAVE SPACE
THANKS TO THE NEW OUTDOOR UNIT DESIGN, INSTALLATION CAN BE CARRIED OUT IN MORE LIMITED SPACES.

OPERATING RANGE
THE UNITS CAN BE USED FOR COOLING EVEN WHEN THE OUTDOOR TEMPERATURE IS EXTREMELY LOW. THIS IS IDEAL FOR SPACES WHICH NEED COOLING EVEN IN WINTER.

Normal cooling conditions	-15°C to 43°C (outside temperature)
Normal heating conditions	-20°C to 24°C (outside temperature)

INSTALLATION SPACE
A BEFORE 50 CM, NOW ONLY 30 CM
B OUTDOOR ONLY 32 CM DEEP

YL INVERTER OUTDOOR UNITS

- MORE COMPACT OUTDOOR UNITS
- INCREASED PIPE LENGTH
- INSTALLATION USING EXISTING PIPES

A energy saving air INVERTER

Flexi System Series

NEW OUTDOOR UNITS INVERTER YH

The new commercial YH Inverter range: more compact, easier to install and with improved performance.
All these outdoor units are perfectly compatible with indoor units of the low silhouette hide-away, high pressure hide-away, cassette and ceiling types.

2.5 H.P. CU-YL24HBE5	3.0 H.P. CU-YL28HBE5	4.0 H.P. CU-YL34HBE5	5.0 H.P. CU-YL43HBE5
		40 % SMALLER	

FLEXIBLE RETROFITTING TO EXISTING INSTALLATIONS

COMPATIBILITY OF FS INVERTER AND INVERTER + SYSTEMS WITH VARIOUS PIPE DIAMETERS

PANASONIC PROVIDES THIS NEW TOOL FOR RETROFITTING ITS EQUIPMENT TO ANY EXISTING AIR CONDITIONING INSTALLATION. BY USING THIS SIMPLE COMPATIBILITY TABLE YOU WILL BE ABLE TO CHECK HOW THE EQUIPMENT WORKS WITH DIFFERENT PIPE DIAMETERS. PIPES SHOULD BE CLEANED CORRECTLY IN ALL CASES, TAKING SPECIAL CARE TO FULLY REMOVE THE REMAINS OF R22 REFRIGERATING GAS FROM THE COOLING CIRCUIT IN SYSTEMS THAT USE THAT REFRIGERANT.

	Ø Liquid pipe	1/4" (0.8mm)			3/8" (0.8mm)			1/2" (0.8mm)	
	Ø Gas pipe	3/8" (0.8mm)	1/2" (0.8mm)	5/8" (1.0mm)	1/2" (0.8mm)	5/8" (1.0mm)	3/4" (1.0mm)	5/8" (1.0mm)	3/4" (1.0mm)
2.5 H.P.	Max. pipe length			10m		50m 1) - 30m 2)		25m	
	Max. height	No	No	10m	No	30m 1) - 25m 2)	No	15m	No
	Additional load			-		50g/m		80g/m	
3.0 H.P.	Max. pipe length			10m		50m 1) - 30m 2)		25m	
	Max. height	No	No	10m	No	30m 1) - 25m 2)	No	15m	No
	Additional load			-		50g/m		80g/m	
4-6 H.P.	Max. pipe length			10m		50m 1) - 30m 2)	25m	25m	25m
	Max. height	No	No	10m	No	30m 1) - 25m 2)	15m	15m	15m
	Additional load			-		80g/m	80g/m	100g/m	100g/m

1) Inverter + range (CU-L)
2) Inverter range (CU-YL)

Correct Possible Not recommended Installation not possible

Minimum piping lengh= 7.5m for all systems.

EASY INSTALLATION YH INVERTER

THANKS TO THE IMPROVEMENTS IN THE NEW FS SERIES INVERTER YOU SAVE SPACE AND INSTALLATION TIME.

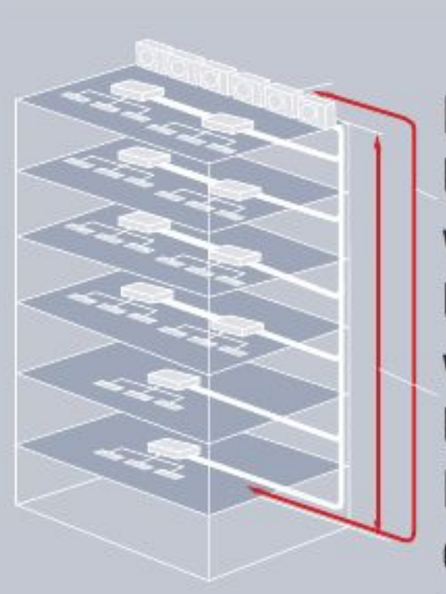

Maximum pipe lenght of 30 m without additional load and 50 m with additional load.
Maximum height difference of 30 m equivalent to 10/11 floors.

NEW MORE COMPACT UNITS

THE NEW OUTDOOR UNITS ARE UP TO 40% SMALLER (MODEL CU-YL34HBE5) THAN THE PREVIOUS RANGE.

OPERATING RANGE

THE UNITS CAN BE USED FOR COOLING EVEN WHEN THE OUTDOOR TEMPERATURE IS EXTREMELY LOW. THIS IS IDEAL FOR SPACES WHICH NEED COOLING EVEN IN WINTER.

Normal cooling conditions	-15ºC to 43ºC (outside temperature)
Normal heating conditions	-20ºC to 24ºC (outside temperature)

INSTALLATION SPACE

A BEFORE 50 CM, NOW ONLY 30 CM
B OUTDOOR ONLY 32 CM DEEP

RANGE OF INDOOR UNITS

		1.0 H.P.	1.5 H.P.	2.0 H.P.	2.25 H.P.
Low static pressure hide-away	INVERTER + // Page 68				
	INVERTER // Page 70	CS-E10JD3EA	CS-E15JD3EA	CS-E18JD3EA	
	Heat pump // Page 72		CS-F14DD3E5	CS-F18DD3E5	
	Cooling only // Page 74		CS-F14DD3E5	CS-F18DD3E5	
High static pressure hide-away	INVERTER + // Page 76				
	INVERTER // Page 78				
	Heat pump // Page 80				
	Cooling only // Page 82				
4-Way 60x60 cassette	INVERTER // Page 84	CS-E10HB4EA	CS-E15HB4EA	CS-E18HB4EA	CS-E21HB4EA
4-Way 90x90 cassette	INVERTER + // Page 86				
	INVERTER // Page 88				
	Heat pump // Page 90		CS-F14DB4E5	CS-F18DB4E5	
	Cooling only // Page 92		CS-F14DB4E5	CS-F18DB4E5	
Ceiling	INVERTER + // Page 94				
	INVERTER // Page 96				
	Heat pump // Page 98			CS-F18DTE5	
	Cooling only // Page 100			CS-F18DTE5	
High pressure hide-away	INVERTER // Page 102				

COOLING

RANGE OF OUTDOOR UNITS

	1.0 H.P.	1.5 H.P.	2.0 H.P.	2.25 H.P.
INVERTER +				
INVERTER	CU-E10HBEA I	CU-E15HBEA I	CU-E18HBEA I	CU-E21HBEA I
Heat pump		CU-B14DBE5 I	CU-B18DBE5 I	

I Single-phase III Three-phase

2.5 H.P.	3.0 H.P.	4.0 H.P.	5.0 H.P.	6.0 H.P.	8.0 H.P.	10 H.P.
CS-F24DD3E5	CS-F28DD3E5	CS-F34DD3E5	CS-F43DD3E5	CS-F50DD3E5		
CS-F24DD3E5	CS-F28DD3E5	CS-F34DD3E5	CS-F43DD3E5			
CS-F24DD3E5	CS-F28DD3E5	CS-F34DD3E5	CS-F43DD3E5	CS-F50DD3E5		
CS-F24DD3E5	CS-F28DD3E5	CS-F34DD3E5	CS-F43DD3E5	CS-F50DD3E		
CS-F24DD2E5	CS-F28DD2E5	CS-F34DD2E5	CS-F43DD2E5	CS-F50DD2E5		
CS-F24DD2E5	CS-F28DD2E5	CS-F34DD2E5	CS-F43DD2E5			
CS-F24DD2E5	CS-F28DD2E5	CS-F34DD2E5	CS-F43DD2E5	CS-F50DD2E5		
CS-F24DD2E5	CS-F28DD2E5	CS-F34DD2E5	CS-F43DD2E5	CS-F50DD2E5		
CS-F24DB4E5	CS-F28DB4E5	CS-F34DB4E5	CS-F43DB4E5	CS-F50DB4E5		
CS-F24DB4E5	CS-F28DB4E5	CS-F34DB4E5	CS-F43DB4E5			
CS-F24DB4E5	CS-F28DB4E5	CS-F34DB4E5	CS-F43DB4E5	CS-F50DB4E5		
CS-F24DB4E5	CS-F28DB4E5	CS-F34DB4E5	CS-F43DB4E5	CS-F50DB4E5		
CS-F24DTE5	CS-F28DTE5	CS-F34DTE5	CS-F43DTE5	CS-F50DTE5		
CS-F24DTE5	CS-F28DTE5	CS-F34DTE5	CS-F43DTE5			
CS-F24DTE5	CS-F28DTE5	CS-F34DTE5	CS-F43DTE5	CS-F50DTE5		
CS-F24DTE5	CS-F28DTE5	CS-F34DTE5	CS-F43DTE5	CS-F50DTE5		
					S-200E1DPQ1	S-250E1DPQ1

ONLY KI!!!!

2.5 H.P.	3.0 H.P.	4.0 H.P.	5.0 H.P.	6.0 H.P.	8.0 H.P.	10 H.P.
CU-L24DBE5 [I]	CU-L28DBE5 [I]	CU-L34DBE5 [I] / L34DBE8 [III]	CU-L43DBE5 [I] / L43DBE 8 [III]	CU-L50DBE8 [III]		
CU-YL24HBE5 [I]	CU-YL28HBE5 [I]	CU-YL34HBE5 [I]	CU-YL43HBE5 [I]		U-200X2XPQ [III]	U-250X2XPQ [III]
CU-B24DBE5 [I]	CU-B28DBE5 [I] / B28DBE8 [III]	CU-B34DBE5 [I] / B34DBE8 [III]	CU-B43DBE8 [III]	CU-B50DBE8 [III]		

TECHNICAL ZOOM

- HIGHER ENERGY CLASS FOR HIGH SAVINGS, EVEN AT -20°C
- ECO MODE FOR 20% ENERGY SAVING
- EXTREMELY COMPACT INDOOR UNITS WITHOUT LOSING STATIC PRESSURE (ONLY 250MM HIGH)
- WEEKLY TIMER, 42 SETTINGS PER WEEK
- 30 M MAXIMUM ELEVATION DIFFERENCE
- EASY CHECK MODE FOR FAILURE DETECTION

LOW STATIC PRESSURE HIDE AWAY // INVERTER + FS TYPE

A COMPLETE LINE UP OF COMPACT, EFFICIENT, QUIETER AND POWERFUL HIDE AWAY, FOR THE MOST DEMANDING CUSTOMERS, FROM 2.5 H.P. TO 6.0 H.P., SINGLE-PHASE AND THREE-PHASE

LOW STATIC PRESSURE HIDE AWAY // INVERTER + FS TYPE

			2.5 H.P.	3.0 H.P.	4.0 H.P.	4.0 H.P.	5.0 H.P.	5.0 H.P.	6.0 H.P.
KIT			KIT-F24DD3E5	KIT-F28DD3E5	KIT-F34DD3E5	KIT-F34DD3E8	KIT-F43DD3E5	KIT-F43DD3E8	KIT-F50DD3E8
Indoor			CS-F24DD3E5	CS-F28DD3E5	CS-F34DD3E5	CS-F34DD3E5	CS-F43DD3E5	CS-F43DD3E5	CS-F50DD3E5
Outdoor			CU-L24DBE5	CU-L28DBE5	CU-L34DBE5	CU-L34DBE8	CU-L43DBE5	CU-L43DBE8	CU-L50DBE8
Wired remote control			CZ-RD513C	CZ-RD513C	CZ-RD513C	CZ-RD513C	CZ-RD513C	CZ-RD513C	CZ-RD513C
Cooling capacity	Nominal (Min-Max)	kW	6.30 (2.00-6.50)	7.10 (2.10-7.50)	10.00 (4.00-12.00)	10.00 (4.00-12.00)	12.50 (4.00-13.50)	12.50 (4.00-13.50)	14.00 (4.00-16.00)
	Nominal (Min-Max)	kCal/h	5,418 (1,720-5,590)	6,106 (1,806-6,450)	8,600 (3,440-10,320)	8,600 (3,440-10,320)	10,750 (3,440-11,610)	10,750 (3,440-11,610)	12,040 (3,440-13,760)
EER [1]	Nominal (Min-Max)		3.21 (3.33-2.71) A	3.21 (3.23-3.06) A	3.61 (3.08-3.48) A	3.61 (3.08-3.48) A	3.01 (2.86-3.07) B	3.01 (2.86-3.07) B	2.81 (2.76-3.08) C
Power input Cooling	Nominal (Min-Max)	kW	1.96 (0.6-2.4)	2.21 (0.65-2.45)	2.77 (1.3-3.45)	2.77 (1.3-3.45)	4.15 (1.4-4.4)	4.15 (1.4-4.4)	4.98 (1.45-5.2)
Heating capacity	Nominal (Min-Max)	kW	7.10 (2.10-7.50)	8.00 (2.20-8.50)	11.20 (4.00-13.50)	11.20 (4.00-13.50)	14.00 (4.00-15.50)	14.00 (4.00-15.50)	16.00 (4.00-18.00)
	Nominal (Min-Max)	kCal/h	6,106 (1,806-6,450)	6,880 (1,892-7,310)	9,632 (3,440-11,610)	9,632 (3,440-11,610)	12,040 (3,440-13,330)	12,040 (3,440-13,330)	13,760 (3,440-15,480)
COP [1]	Nominal (Min-Max)		3.41 (3.50-2.38) B	3.42 (3.38-2.62) B	3.41 (3.08-3.18) B	3.41 (3.08-3.18) B	3.41 (2.86-3.04) B	3.41 (2.86-3.04) B	3.21 (2.86-2.95) C
Power input Heating	Nominal (Min-Max)	kW	2.08 (0.6-3.15)	2.34 (0.65-3.25)	3.28 (1.3-4.25)	3.28 (1.3-4.25)	4.11 (1.4-5.1)	4.11 (1.4-5.1)	4.98 (1.4-6.1)
Annual Energy Consumption [2]		kWh	980	1,105	1,385	1,385	2,075	2,075	2,490
Indoor unit									
External static pressure [3]	High (Shigh)	mmAq	5.1 [7] (7.0 [8])	5.1 [7] (7.0 [8])	5.1 [7] (7.0 [8])	5.1 [7] (7.0 [8])	5.1 [7] (7.0 [8])	5.1 [7] (7.0 [8])	5.1 [7] (7.0 [8])
	Medium	mmAq	2.6	2.6	2.8	2.8	2.8	2.8	3
	Low	mmAq	1.8	1.8	2	2	2	2	2.5
Air Volume	High (Shigh)	m^3/h	1,320 [7] (1,200 [8])	1,320 [7] (1,200 [8])	2,160 [7] (2,010 [8])	2,160 [7] (2,010 [8])	2,400 [7] (2,190 [8])	2,400 [7] (2,190 [8])	2,640 [7] (2,430 [8])
	Medium	m^3/h	984	984	1,620	1,620	1,770	1,770	1,920
	Low	m^3/h	810	810	1,320	1,320	1,420	1,420	1,560
Moisture removal volume		l/h	2.3	2.8	3.8	4.3	6.0	7.9	9.0
Sound pressure Level [4]	Cooling (Hi / Lo)	dB(A)	43 / 39	43 / 39	47 / 43	45 / 41	45 / 41	45 / 41	46 / 42
	Heating (Hi / Lo)	dB(A)	43 / 39	43 / 39	45 / 41	44 / 40	44 / 40	44 / 40	45 / 41
Sound power Level	Cooling (Hi)	dB	59	59	60	60	60	60	61
	Heating (Hi)	dB	59	59	59	59	59	59	60
Dimension	Indoor (H x W x D)	mm	250x1,000+100[5]x650	250x1,000+100[5]x650	250x1,200+100[5]x650	250x1,200+100[5]x650	250x1,200+100[5]x650	250x1,200+100[5]x650	250x1,200+100[5]x650
Net weight	Indoor	kg	41	41	47	47	47	47	47
Dust filter			Yes	Yes	Yes	Yes	Yes	Yes	Yes
Outdoor unit									
Power source		V	220 - 240	220 - 240	220 - 240	380 - 415	220 - 240	380 - 415	380 - 415
Connection		mm^2	4 x 1'5 to 2'5	4 x 1'5 to 2'5	4 x 1'5 to 2'5	4 x 1'5 to 2'5	4 x 1'5 to 2'5	4 x 1'5 to 2'5	4 x 1'5 to 2'5
Current Cooling	Nominal (Min / Max)	A	9.0	10.1	12.6	4.4	18.8	6.5	7.6
Current Heating	Nominal (Min / Max)	A	9.5	10.6	14.9	5.2	18.7	6.5	7.6
Air Volume	Cooling / Heating	m^3/h	2,880 / 2,880	2,880 / 2,880	5,880 / 5,880	5,880 / 5,880	5,880 / 5,880	5,880 / 5,880	5,880 / 5,880
Sound pressure Level [4]	Cooling (Hi)	dB(A)	47	48	52	52	53	53	54
	Heating (Hi)	dB(A)	49	50	54	54	55	55	56
Sound power Level	Cooling (Hi)	dB	63	64	66	66	67	67	68
	Heating (Hi)	dB	65	66	68	68	69	69	70
Dimensions	H x W x D	mm	795x900x320	795x900x320	1,340x900x320	1,340x900x320	1,340x900x320	1,340x900x320	1,340x900x320
Net weight		kg	71	71	110	105	110	105	105
Piping connections	Liquid pipe	inch (mm)	3/8" (9.52)	3/8" (9.52)	3/8" (9.52)	3/8" (9.52)	3/8" (9.52)	3/8" (9.52)	3/8" (9.52)
	Gas pipe	inch (mm)	5/8" (15.88)	5/8" (15.88)	5/8" (15.88)	5/8" (15.88)	5/8" (15.88)	5/8" (15.88)	5/8" (15.88)
Refrigerant Loading	R410A	kg	2.13	2.35	3.3	3.3	3.3	3.3	3.5
Elevation difference (in/out) [6]	Max	m	30	30	30	30	30	30	30
Piping length	Min - Max	m	7.5-50	7.5-50	7.5-50	7.5-50	7.5-50	7.5-50	7.5-50
Piping length without refrigerent increase	Max	m	30	30	30	30	30	30	30
Additional gas		g/m	50	50	50	50	50	50	50
Area control accessory			EKRORO wire	EKRORO wire	EKRORO wire	EKRORO wire	EKRORO wire	EKRORO wire	EKRORO wire
Operating range, outdoor [3]	Cooling Min / Max	°c	-5 / 43	-5 / 43	-5 / 43	-5 / 43	-5 / 43	-5 / 43	-5 / 43
	Heating Min / Max	°c	-20 / 24	-20 / 24	-20 / 24	-20 / 24	-20 / 24	-20 / 24	-20 / 24

GLOBAL REMARKS	Rating conditions	Cooling	Heating
	Inside air temperature	27°C DB / 19°C WB	20°C DB
	Outside air temperature	35°C DB / 24°C WB	7°C DB / 6°C WB

DB : Dry buld; WB : Wet buld

1) EER and COP, Energy Saving Classification, is at 220 - 240V (380 - 415V) only in accordance with EU directive 2002/31/EC.
2) The annual consumption is calculated by multiplying the input power at 220 - 240V (380 - 415V) by an average of 500-hr per year in cooling mode.
3) The specification listed on the table indicates values under the condition of 50Pa (5,1 mmAq) which are applied for factory default setting.
4) The sound pressure Level of the units shows the value measured of a position 1 meter in front of the main body and 1,5 from the ground The sound pressure is measured in accordance with Eurovent 6/C/006-97 specification.
5) Add 100mm for indoor unit or 70mm for outdoor unit for piping port.
6) When installing the outdoor unit at a higher position than the indoor unit.
7) Change connector on fan motor from Hi to SHi.
8) By reducing the air volume on the air duct.

KIT-F24DD3E5 // KIT-F28DD3E5 // KIT-F34DD3E5 // KIT-F34DD3E8 // KIT-F43DD3E5 // KIT-F43DD3E8 // KIT-F50DD3E8

CZ-RD513C

CU-L24DBE5
CU-L28DBE5

CU-L34DBE5 CU-L43DBE8
CU-L34DBE8 CU-L50DBE8
CU-L43DBE5

ENERGY EFFICIENCY AND ECOLOGY

- Maximum efficiency Inverter system
- R410A environmentally friendly refrigerant gas

COMFORT

- Cooling with low outdoor temperatures (down to -20 ºC)
- Automatic start after a power cut
- Automatic fan operation mode
- Soft dry operation mode
- Hot start mode
- Selection of temperature sensor at indoor unit or wired remote control

EASE OF USE

- Weekly On/Off timer (6 settings per day and 42 per week)
- Wired remote control

EASY INSTALLATION AND MAINTENANCE

- Installation using existing pipes
- Selectable static pressure up to 7 mmAq
- Self-diagnostic function
- Condensation control
- Ultra compact indoor unit

SPACE NEEDED FOR INSTALLATION

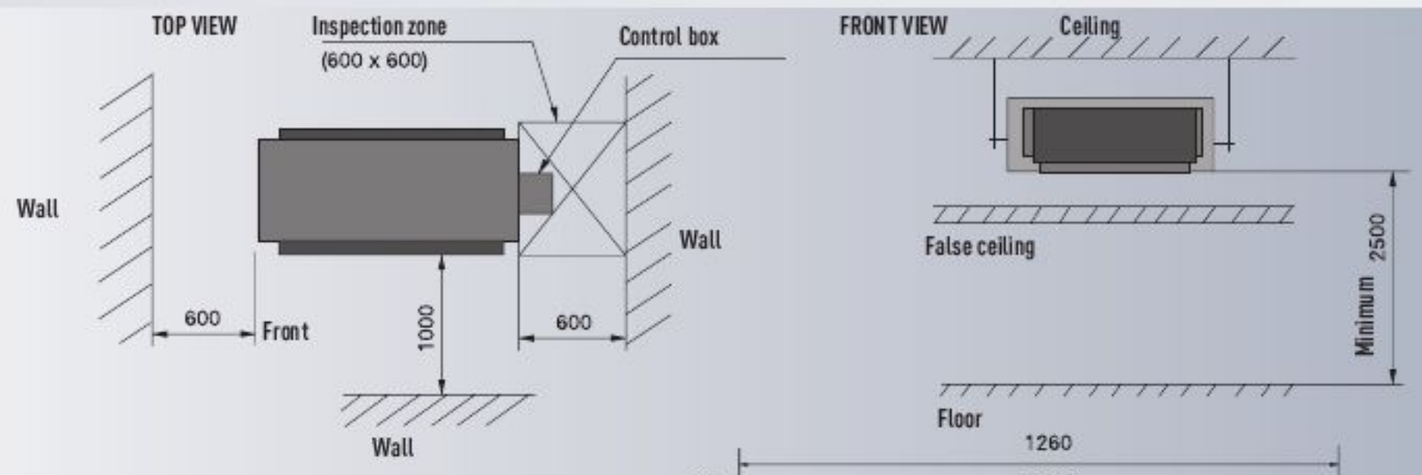

INDOOR UNIT DIMENSIONS

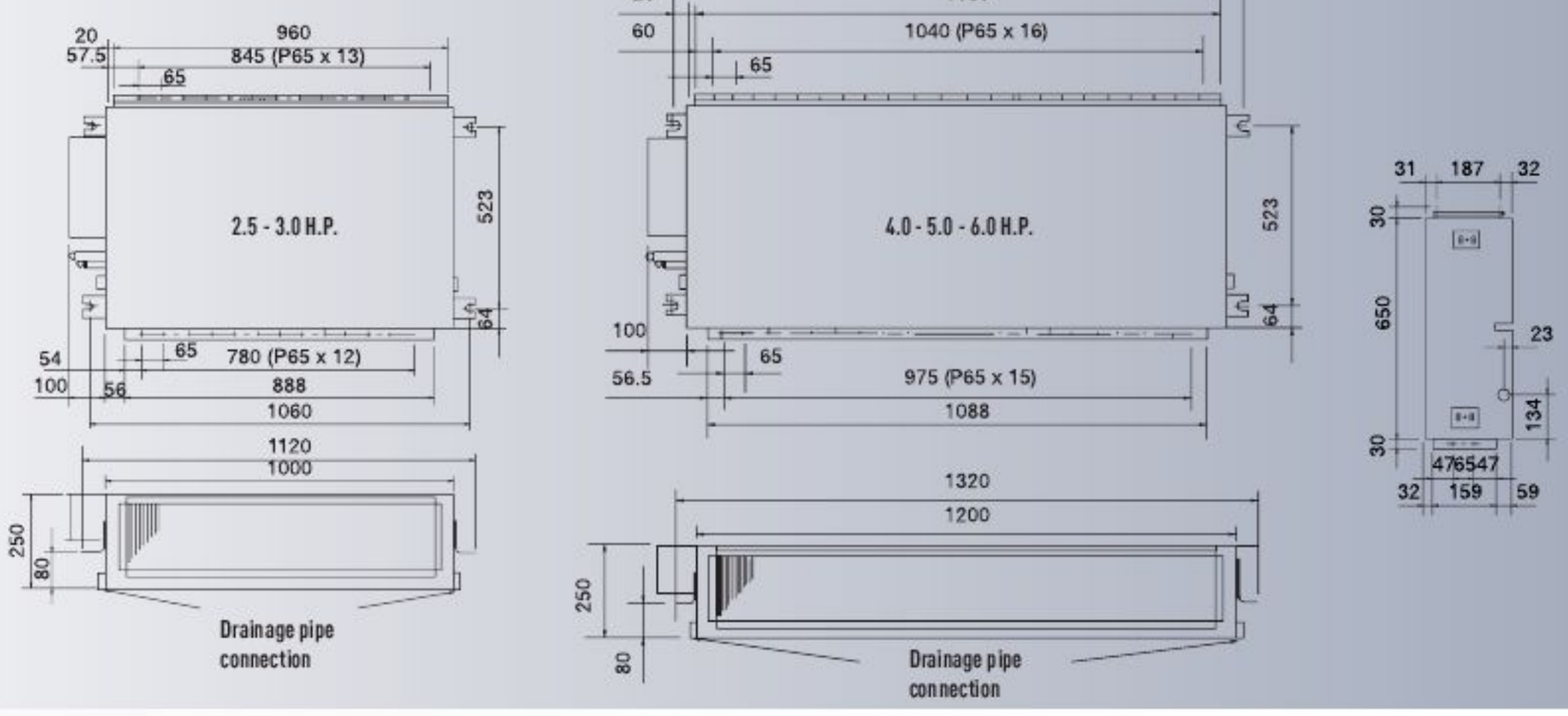

TECHNICAL ZOOM

- ULTRA COMPACT OUTDOOR UNITS (-40% REDUCED SIZE FOR THE CU-YL34HBE5)
- ECO MODE FOR 20% ENERGY SAVING
- EXTREMELY COMPACT INDOOR UNITS WITHOUT LOSING STATIC PRESSURE (ONLY 250MM HIGH)
- COOLING WITH LOW OUTDOOR TEMPERATURES (DOWN TO -20 ºC)
- WEEKLY TIMER, 42 SETTINGS PER WEEK
- EASY CHECK MODE FOR FAILURE DETECTION

LOW STATIC PRESSURE HIDE AWAY // INVERTER FS TYPE

COMPACT LINE UP OF INVERTER HIDE AWAY, FROM 1.0 H.P. TO 5.0 H.P., SINGLE-PHASE

LOW STATIC PRESSURE HIDE AWAY // INVERTER FS TYPE

			1 HP	1.5 HP	2 HP	2.5 HP	3.0 HP	4.0 HP	5.0 HP
KIT			KIT-E10-JD3EA	KIT-E15-JD3EA	KIT-E18-JD3EA	KIT-YH24DD3E5	KIT-YH28DD3E5	KIT-YH34DD3E5	KIT-YH43DD3E5
Indoor			CS-E10JD3EA	CS-E15JD3EA	CS-E18JD3EA	CS-F24DD3E5	CS-F28DD3E5	CS-F34DD3E5	CS-F43DD3E5
Outdoor			CU-E10HBEA	CU-E15HBEA	CU-E18HBEA	CU-YL24HBE5	CU-YL28HBE5	CU-YL34HBE5	CU-YL43HBE5
Wired remote control			CZ-RD52CP	CZ-RD52CP	CZ-RD52CP	CZ-RD513C	CZ-RD513C	CZ-RD513C	CZ-RD513C
Cooling capacity	Nominal (Min - Max)	kW	2.50 (0.80-3.00)	4.10 (0.90-4.70)	5.10 (0.90-5.70)	5.60 (2 - 6.30)	7.10 (2.10 - 7.50)	10.00 (3.8 - 10.50)	12.50 (3.80 - 13.00)
	Nominal (Min - Max)	kCal/h	2150 (690-2580)	3530 (770-4040)	4390 (770-4900)	4816 (1720-5418)	6106 (1806-6450)	8600 (3268-9030)	10750 (3268-11180)
EER [1]	Nominal (Min - Max)		3.68 (3.87-3.53) A	3.31 (3.53-3.13) A	3.15 (3.53-3.10) B	2.81 (3.64-2.86) C	2.81 (3.23-2.88) C	2.61 (2.92-2.56) D	3.81 (2.92-2.77) C
Power input Cooling	Nominal (Min-Max)	kW	0.680 (0.155-0.850)	1.240 (0.255-1.500)	1.620 (0.250-1.840)	1.990 (0.550-2.200)	2.530 (0.650-2.600)	3.560 (1.300-4.100)	4.450 (1.300-4.700)
Heating capacity	Nominal (Min - Max)	kW	3.20 (0.60-5.00)	4.80 (0.90-55.0)	6.10 (0.90-7.10)	7.00 (2.10-7.50)	8.00 (2.20-8.30)	11.20 (3.80-12.50)	14.00 (3.80-14.50)
	Nominal (Min - Max)	kCal/h	2752 (516-4300)	4130 (770-4730)	5250 (770-6110)	6020 (1806-6450)	6880 (1892-7138)	9632 (3268-10750)	12040 (3268-12470)
COP [1]	Nominal (Min - Max)		3.64 (4.44-3.27) A	2.64 (3.46-2.63) E	3.30 (3.46-3.23) C	2.81 (4.20-2.68) D	2.81 (3.67-2.59) D	3.01 (3.17-2.94) C	3.01 (3.17-2.90) C
Power input Heating	Nominal (Min - Max)	kW	0.880 (0.135-1.530)	1.820 (0.260-2.090)	1.850 (0.260-2.200)	2.490 (0.500-2.800)	2.850 (0.600-3.200)	3.720 (1.200-4.250)	4.650 (1.200-5.000)
Annual Energy Consumption [2]		kWh	340	620	810	995	1,265	1,780	2,225
Indoor unit									
External static pressure [3]	High (Shigh)	mmAq	3.5 (5.5 [7])	3.5 (7.0 [7])	3.5 (6.0 [7])	5.1 [7] (7.0 [8])	5.1 [7] (7.0 [8])	5.1 [7] (7.0 [8])	5.1 [7] (7.0 [8])
	Medium	mmAq	1.5	1.5	1.5	2.6	2.6	2.8	2.8
	Low	mmAq	1	1	1	1.8	1.8	2	2
Air Volume	High (Shigh)	m^3/h	414 (660 [7])	474 (660 [7])	624 (750 [7])	1.320 [7] (1.200 [8])	1.320 [7] (1.200 [8])	2.160 [7] (2.010 [8])	2.400 [7] (2.190 [8])
	Medium	m^3/h	402	402	528	984	984	1,620	1,770
	Low	m^3/h	330	330	444	810	810	1,320	1,420
Moisture removal volume		l/h	1.50	2.30	2.80	3.20	4.20	6.00	7.90
Sound pressure Level [4]	Cooling (Hi / Lo)	dB(A)	33 / 24	33 / 24	41 / 27	43 / 39	43 / 39	45 / 41	45 / 41
	Heating (Hi / Lo)	dB(A)	35 / 25	35 / 25	41 / 29	43 / 39	43 / 39	44 / 40	44 / 40
Sound power Level	Cooling (Hi)	dB	49	49	57	59	59	60	60
	Heating (Hi)	dB	51	51	57	59	59	60	60
Dimensions	H x W x D	mm	235x750+65 [5]x370	235x750+65 [5]x370	285x750+65 [5]x370	250x1,000+100 [5]x650	250x1,000+100 [5]x650	250x1,200+100 [5]x650	250x1,200+100 [5]x650
Net weight	Indoor	kg	17	18	18	41	41	47	47
Dust filter			No	No	No	Yes	Yes	Yes	Yes
Outdoor unit									
Power source		V	220 - 240	220 - 240	220 - 240	220 - 240	220 - 240	220 - 240	220 - 240
Connection		mm^2	4 x 1.5 to 2.5	4 x 1.5 to 2.5	4 x 1.5 to 2.5	4 x 1.5 to 2.5	4 x 1.5 to 2.5	4 x 1.5 to 2.5	4 x 1.5 to 2.5
Current Cooling	Nominal (Min / Max)	A	2.9	5.7	7.3	9.00	11.40	16.30	20.30
Current Heating	Nominal (Min / Max)	A	3.8	8.2	8.3	11.30	12.20	17.00	21.20
Air Volume	Cooling / Heating	m^3/h	1,728	2,808	2,400	3,180	3,480	3,720	5,640
Sound pressure Level [4]	Cooling (Hi)	dB(A)	45	46	47	49	50	53	54
	Heating (Hi)	dB(A)	46	47	48	51	52	56	56
Sound power Level	Cooling (Hi)	dB	58	59	60	67	68	71	72
	Heating (Hi)	dB	59	60	61	68	69	73	73
Dimensions	H x W x D	mm	540x780+70 [5]x289	750x875+70 [5]x345	750x875+70 [5]x345	795x875+70 [5]x320	795x875+70 [5]x320	795x900x320	1170x900x320
Net weight		kg	35	48	48	65	65	66	94
Piping connections	Liquid pipe	inch (mm)	1/4" (6.35)	1/4" (6.35)	1/4" (6.35)	3/8" (9.52)	3/8" (9.52)	3/8" (9.52)	3/8" (9.52)
	Gas pipe	inch (mm)	3/8" (9.52)	1/2" (12.70)	1/2" (12.70)	5/8" (15.88)	5/8" (15.88)	5/8" (15.88)	5/8" (15.88)
Refrigerant Loading	R410A	kg	1.15	1.23	1.06	1.63	2.05	2.8	2.8
Elevation difference (in/out) [6]	Max	m	15	15	20	25	25	25	25
Piping length	Min - Max	m	3 - 20	3 - 20	3 - 30	7.5 - 30	7.5 - 30	7.5 - 50	7.5 - 50
Piping length without refrigerent increase	Max	m	10	10	10	25	25	25	25
Additional gas		g/m	20	20	20	50	50	50	50
Area control accessory						EKRORO wire	EKRORO wire	EKRORO wire	EKRORO wire
Operating range, outdoor [3]	Cooling Min / Max	°c	-10/43	-10/43	-10/43	-5 / 43	-5 / 44	-5 / 45	-5 / 46
	Heating Min / Max	°c	-10/24	-10/24	-10/24	-15 / 24	-15 / 25	-15 / 26	-15 / 27

GLOBAL REMARKS

Rating conditions	Cooling	Heating
Inside air temperature	27°C DB / 19°C WB	20°C DB
Outside air temperature	35°C DB / 24°C WB	7°C DB / 6°C WB

DB : Dry buld; WB : Wet buld

1) EER and COP, Energy Saving Classification, is at 220 - 240V (380 - 415V) only in accordance with EU directive 2002/31/EC.
2) The annual consumption is calculated by multiplying the input power at 220 - 240V (380 - 415V) by an average of 500-hr per year in cooling mode.
3) The specification listed on the table indicates values under the condition of 50Pa (5,1 mmAq) which are applied for factory default setting.
4) The sound pressure Level of the units shows the value measured of a position 1 meter in front of the main body and 1,5 from the ground The sound pressure is measured in accordance with Eurovent 6/C/006-97 specification.
5) Add 100mm for indoor unit or 70mm for outdoor unit for piping port.
6) When installing the outdoor unit at a higher position than the indoor unit.
7) Change connector on fan motor from Hi to SHi.
8) By reducing the air volume on the air duct.

KIT-E10-JD3EA // KIT-E15-JD3EA // KIT-E18-JD3EA // KIT-E21-JD3EA // KIT-YH24DD3E5 // KIT-YH28DD3E5 // KIT-YH34DD3E5 // KIT-YH43DD3E5

CZ-RD513C / CZ-RD52CP
WIRED

CU-E10HBEA CU-E18HBEA
CU-E15HBEA CU-E21HBEA

CU-YL24HBE5
CU-YL28HBE5

CU-YL34HBE5

CU-YL43HBE5

ENERGY EFFICIENCY AND ECOLOGY
- Maximum efficiency Inverter system
- R410A environmentally friendly refrigerant gas

COMFORT
- Cooling with low outdoor temperatures (down to -15 ºC)
- Automatic start after a power cut
- Automatic fan operation mode
- Soft dry operation mode
- Hot start mode
- Selection of temperature sensor at indoor unit or wired remote control

EASE OF USE
- Weekly On/Off timer (6 settings per day and 42 per week)
- Wired remote control

EASY INSTALLATION AND MAINTENANCE
- Installation using existing pipes
- Selectable static pressure up to 7 mmAq
- Self-diagnostic function
- Condensation control
- Ultra compact indoor unit

SPACE NEEDED FOR INSTALLATION

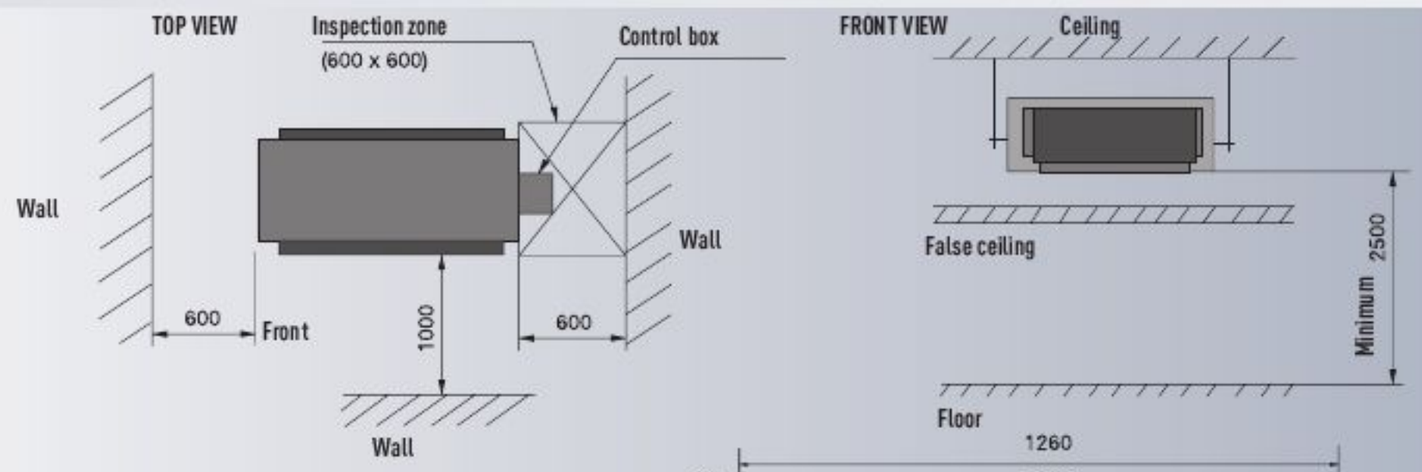

INDOOR UNIT DIMENSIONS

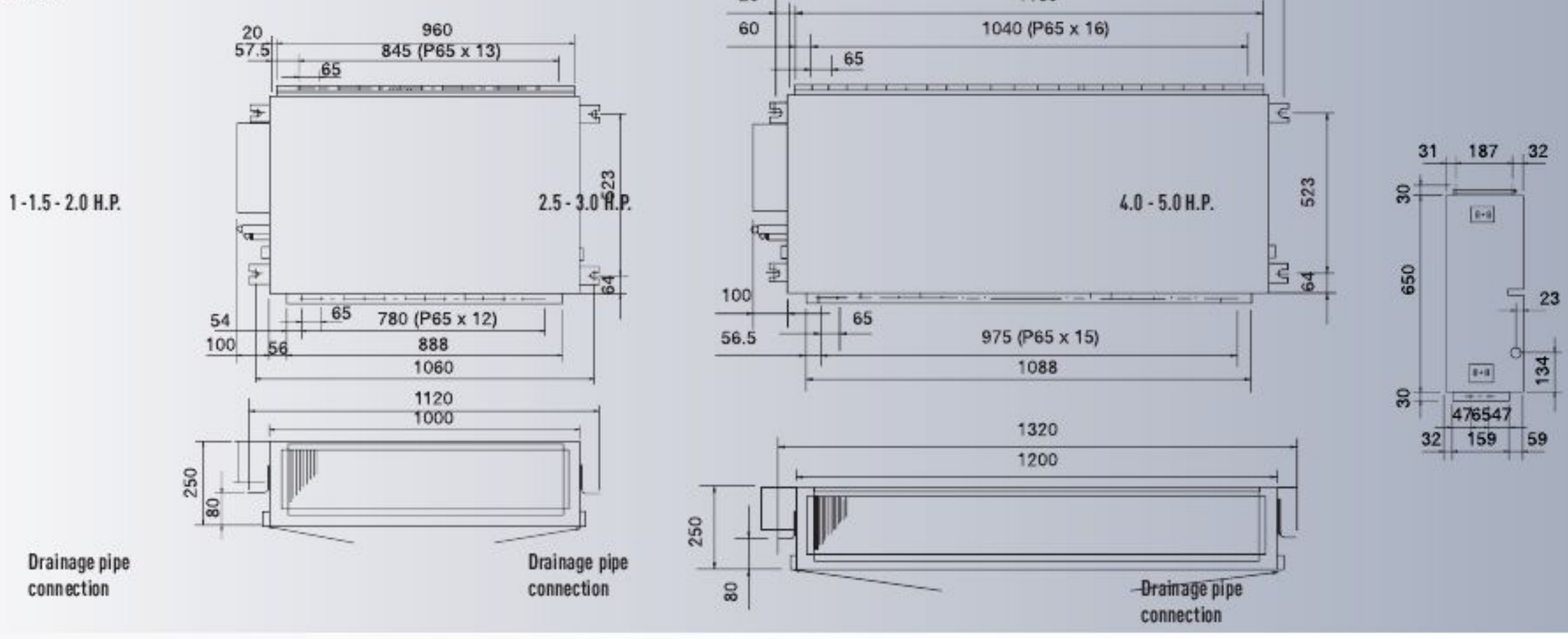

TECHNICAL ZOOM

- EXTREMELY COMPACT INDOOR UNITS WITHOUT LOSING STATIC PRESSURE (ONLY 250MM HIGH)
- ECO MODE FOR 20% ENERGY SAVING
- WEEKLY TIMER, 42 SETTINGS PER WEEK
- EASY CHECK MODE FOR FAILURE DETECTION

LOW STATIC PRESSURE HIDE AWAY // HEAT PUMP FS TYPE

FULL LINE UP OF HEAT PUMP NO-INVERTER HIDE AWAY, FROM 1.5 H.P. TO 6.0 H.P., SINGLE-PHASE AND THREE-PHASE

LOW STATIC PRESSURE HIDE AWAY // HEAT PUMP FS TYPE

			1.5 H,P,	2.0 H,P,	2.5 H,P,	3.0 H,P,	3.0 H,P,	4.0 H,P,	4.0 H,P,	5.0 H,P,	6.0 H,P,
KIT			KIT-F14DD3E5-C	KIT-F18DD3E5-C	KIT-F24DD3E5-C	KIT-F28DD3E5-C	KIT-F28DD3E8-C	KIT-F34DD3E5-C	KIT-F34DD3E8-C	KIT-F43DD3E8-C	KIT-F50DD3E8-C
Indoor			CS-F14DD3E5	CS-F18DD3E5	CS-F24DD3E5	CS-F28DD3E5	CS-F28DD3E5	CS-F34DD3E5	CS-F34DD3E5	CS-F43DD3E5	CS-F50DD3E5
Outdoor			CU-B14DBE5	CU-B18DBE5	CU-B24DBE5	CU-B28DBE5	CU-B28DBE8	CU-B34DBE5	CU-B34DBE8	CU-B43DBE8	CU-B50DBE8
Wired remote control			CZ-RD513C	CZ-RD513C	CZ-RD513C	CZ-RD513C	CZ-RD513C	CZ-RD513C	CZ-RD513C	CZ-RD513C	CZ-RD513C
Cooling capacity	Nominal (Min-Max)	kW	3.80	5.00	6.60	7.30	7.30	10.00	10.00	12.50	13.50
	Nominal (Min-Max)	kCal/h	3,268	4,300	5,676	6,278	6,278	8,600	8,600	10,750	11,610
EER [1]	Nominal (Min-Max)		2.88 C	2.66 D	2.55 E	2.57 E	2.57 E	2.58 E	2.67 E	2.60 E	2.54 E
Power input Cooling	Nominal (Min-Max)	kW	1.35 (1.32-1.38)	1.89 (1.86-1.92)	2.59 (2.56-2.64)	2.84 (2.78-2.89)	2.84 (2.78-2.89)	3.88 (3.83-4.05)	3.75 (3.7-3.8)	4.80 (4.75-4.87)	5.31 (5.26-5.46)
Heating capacity	Nominal (Min-Max)	kW	4.30	5.60	7.10	8.00	8.00	11.20	11.20	14.00	15.00
	Nominal (Min-Max)	kCal/h	3,698	4,816	6,106	6,880	6,880	9,632	9,632	12,040	12,900
COP [1]	Nominal (Min-Max)		3.31 C	3.29 C	2.87 D	2.97 D	2.97 D	2.84 D	3.13 D	2.99 D	2.95 D
Power input Heating	Nominal (Min-Max)	kW	1.21 (1.18-1.24)	1.70 (1.67-1.73)	2.47 (2.4-2.56)	2.69 (2.61-2.78)	2.69 (2.61-2.78)	3.94 (3.86-4.0)	3.58 (3.54-3.64)	4.68 (4.61-4.78)	5.08 (5.03-5.13)
Annual Energy Consumption [2]		kWh	675	945	1,295	1,420	1,420	1,940	1,875	2,400	2,655
Indoor unit											
External static pressure [3]	High (Shigh)	mmAq	5,1 [7] (7,0 [8])	5,1 [7] (7,0 [8])	5,1 [7] (7,0 [8])	5,1 [7] (7,0 [8])	5,1 [7] (7,0 [8])	5,1 [7] (7,0 [8])	5,1 [7] (7,0 [8])	5,1 [7] (7,0 [8])	5,1 [7] (7,0 [8])
	Medium	mmAq	2.5	2.5	2.6	2.6	2.6	2.8	2.8	2.8	3
	Low	mmAq	1.7	1.7	1.8	1.8	1.8	2	2	2	2.5
Air Volume	High (Shigh)	m^3/h	1,020	1,020	1,320 [7] (1,200 [8])	1,320 [7] (1,200 [8])	1,320 [7] (1,200 [8])	2,160 [7] (2,010 [8])	2,160 [7] (2,010 [8])	2,400 [7] (2,190 [8])	2,640 [7] (2,430 [8])
	Medium	m^3/h	798	798	984	984	984	1,620	1,620	1,770	1,920
	Low	m^3/h	660	660	810	810	810	1,320	1,320	1,420	1,560
Moisture removal volume		l/h	2.2	2.8	3.8	4.3	4.3	6.0	6.0	7.9	8.6
Sound pressure Level [4]	Cooling (Hi / Lo)	dB(A)	42 / 38	42 / 38	43 / 39	43 / 39	43 / 39	45 / 41	45 / 41	45 / 41	46 / 42
	Heating (Hi / Lo)	dB(A)	40 / 36	40 / 36	43 / 39	43 / 39	43 / 39	44 / 40	44 / 40	44 / 40	45 / 41
Sound power Level	Cooling (Hi)	dB	58	58	59	59	59	60	60	60	61
	Heating (Hi)	dB	56	56	59	59	59	59	59	59	60
Dimensions. indoor	H x W x D	mm	250x1,000+100[5]x650	250x1,000+100[5]x650	250x1,000+100[5]x650	250x1,000+100[5]x650	250x1,000+100[5]x650	250x1,200+100[5]x650	250x1,200+100[5]x650	250x1,200+100[5]x650	250x1,200+100[5]x650
Net weight	Indoor	kg	34	34	41	41	41	47	47	47	47
Dust filter			Yes	Yes	Yes	Yes	Yes	Yes	Yes	Yes	Yes
Outdoor unit											
Power source		V	220 - 240	220 - 240	220 - 240	220 - 240	380 - 415	220 - 240	380 - 415	380 - 415	380 - 415
Connection		mm^2	4 x 1'5 to 2'5	4 x 1'5 to 2'5	4 x 1'5 to 2'5	4 x 1'5 to 2'5	4 x 1'5 to 2'5	4 x 1'5 to 2'5	4 x 1'5 to 2'5	4 x 1'5 to 2'5	4 x 1'5 to 2'5
Current Cooling	Nominal (Min / Max)	A	6.31	8.53	12.9	13.5	4.9	18.6	6.45	8.1	8.8
Current Heating	Nominal (Min / Max)	A	5.36	7.63	11.8	12.6	4.7	18.6	6.2	7.9	8.4
Air Volume	Cooling / Heating	m^3/h	3,240 / 3,240	3,420 / 3,429	3,600 / 3,600	3,780 / 3,780	3,780 / 3,780	5,640 / 5,640	5,640 / 5,640	5,640 / 5,640	5,760 / 5,760
Sound pressure Level [4]	Cooling (Hi)	dB(A)	49	49	50	52	52	55	55	56	56
	Heating (Hi)	dB(A)	50	50	51	53	53	56	56	57	57
Sound power Level	Cooling (Hi)	dB	65	65	66	67	67	69	69	70	70
	Heating (Hi)	dB	66	66	67	68	68	70	70	71	71
Dimensions	H x W x D	mm	795x900x320	795x900x320	795x900x320	795x900x320	795x900x320	1,170x900x320	1,170x900x320	1,170x900x320	1,170x900x320
Net weight		kg	55	57	69	69	69	102	100	102	102
Piping connections	Liquid pipe	inch (mm)	1/4" (6.35)	1/4" (6.35)	3/8" (9.52)	3/8" (9.52)	3/8" (9.52)	3/8" (9.52)	3/8" (9.52)	3/8" (9.52)	3/8" (9.52)
	Gas pipe	inch (mm)	1/2" (12.70)	1/2" (12.70)	5/8" (15.88)	5/8" (15.88)	5/8" (15.88)	5/8" (15.88)	5/8" (15.88)	5/8" (15.88)	5/8" (15.88)
Refrigerant Loading	R410A	kg	1.1	1.35	1.7	2.05	2.05	2.7	2.7	3.1	3.4
Elevation difference (in/out) [6]	Max	m	20	20	30	30	30	30	30	30	30
Piping length	Min - Max	m	7.5 - 30	7.5 - 30	7.5 - 50	7.5 - 50	7.5 - 50	7.5 - 50	7.5 - 50	7.5 - 50	7.5 - 50
Piping length without refrigerent increase	Max	m	20	20	30	30	30	30	30	30	30
Additional gas		g/m	20	20	50	50	50	50	50	50	50
Area control accessory			EKRORO wire	EKRORO wire	EKRORO wire	EKRORO wire	EKRORO wire	EKRORO wire	EKRORO wire	EKRORO wire	EKRORO wire
Operating range, outdoor***	Cooling Min / Max	°c	5 / 43	5 / 43	5 / 43	5 / 43	5 / 43	5 / 43	5 / 43	5 / 43	5 / 43
	Heating Min / Max	°c	-10 / 24	-10 / 24	-10 / 24	-10 / 24	-10 / 24	-10 / 24	-10 / 24	-10 / 24	-10 / 24

GLOBAL REMARKS	Rating conditions	Cooling	Heating
	Inside air temperature	27°C DB / 19°C WB	20°C DB
	Outside air temperature	35°C DB / 24°C WB	7°C DB / 6°C WB

DB : Dry buld; WB : Wet buld

1) EER and COP, Energy Saving Classification, is at 220 - 240V (380 - 415V) only in accordance with EU directive 2002/31/EC.
2) The annual consumption is calculated by multiplying the input power at 220 - 240V (380 - 415V) by an average of 500-hr per year in cooling mode.
3) The specification listed on the table indicates values under the condition of 50Pa (5,1 mmAq) which are applied for factory default setting.
4) The sound pressure Level of the units shows the value measured of a position 1 meter in front of the main body and 1,5 from the ground The sound pressure is measured in accordance with Eurovent 6/C/006-97 specification.
5) Add 100mm for indoor unit or 70mm for outdoor unit for piping port.
6) When installing the outdoor unit at a higher position than the indoor unit.
7) Change connector on fan motor from Hi to SHi.
8) By reducing the air volume on the air duct.

CZ-RD513C

CU-B14DBE5 CU-B28DBE5
CU-B18DBE5 CU-B28DBE8
CU-B24DBE5

CU-B34DBE5 CU-B43DBE8
CU-B34DBE8 CU-B50DBE8

KIT-F14DD3E5-C // KIT-F18DD3E5-C // KIT-F24DD3E5-C // KIT-F28DD3E5-C // KIT-F28DD3E8-C // KIT-F34DD3E5-C // KIT-F34DD3E8-C // KIT-F43DD3E8-C // KIT-F50DD3E8-C

ENERGY EFFICIENCY AND ECOLOGY
- R410A environmentally friendly refrigerant gas

COMFORT
- Automatic start after a power cut
- Automatic fan operation mode
- Soft dry operation mode
- Hot start mode
- Selection of temperature sensor at the indoor unit or the wired remote control

EASE OF USE
- Weekly On/Off timer (6 settings per day and 42 per week)
- Wired remote control

EASY INSTALLATION AND MAINTENANCE
- Selectable static pressure up to 7 mmAq
- Self-diagnostic function
- Condensation control
- Ultra compact indoor unit

SPACE NEEDED FOR INSTALLATION

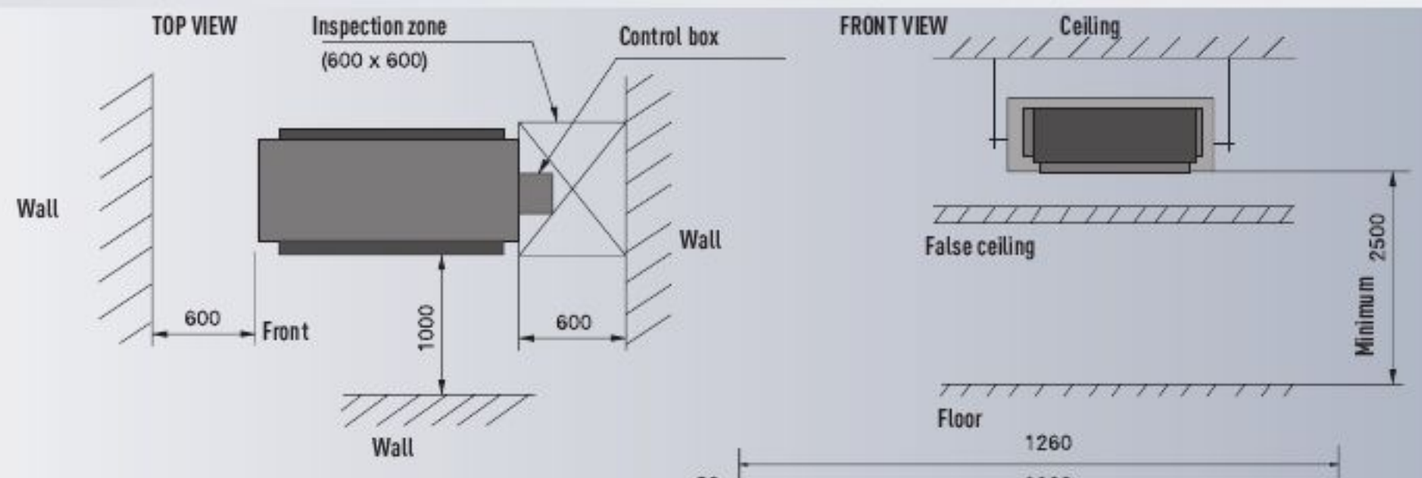

INDOOR UNIT DIMENSIONS

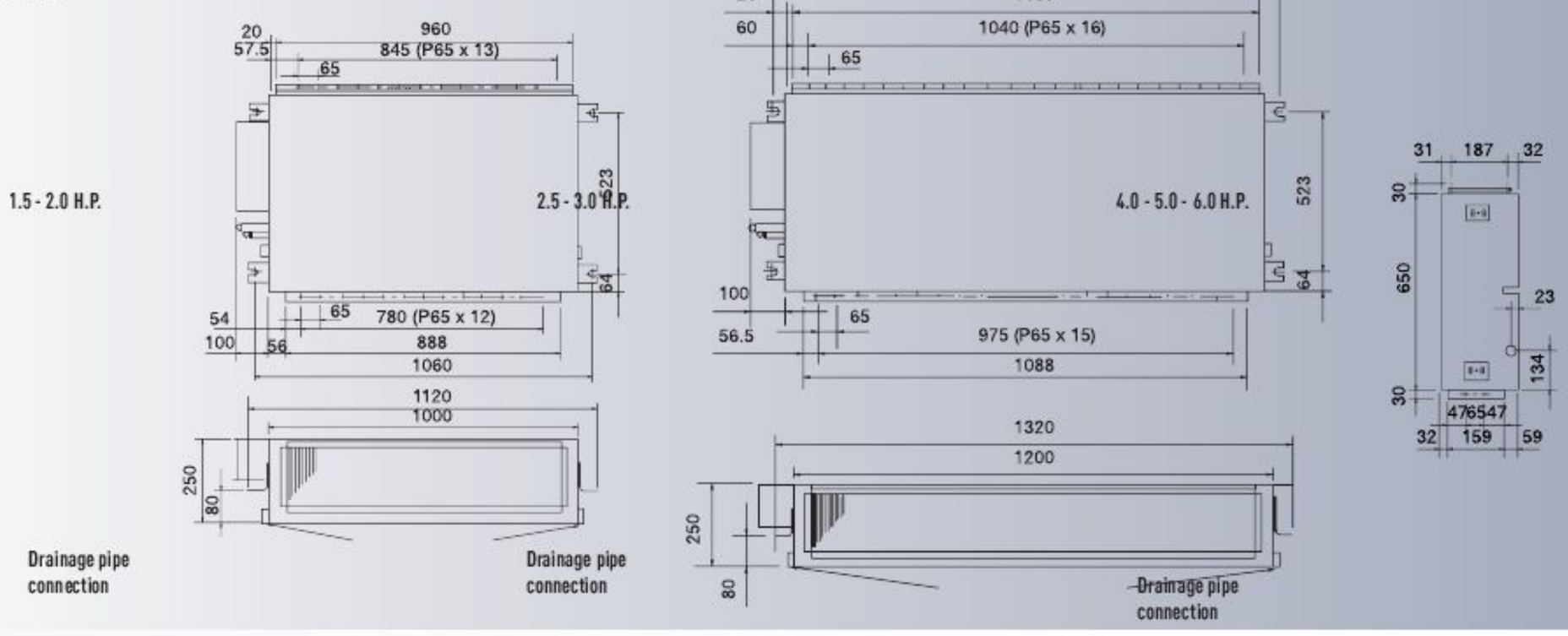

TECHNICAL ZOOM

- HIGHER ENERGY CLASS FOR HIGH SAVINGS, EVEN AT -20°C
- ECO MODE FOR 20% ENERGY SAVING
- STATIC PRESSURE TILL 10MMAQ
- WEEKLY TIMER, 42 SETTINGS PER WEEK
- MAX ELEVATION DIFFERENCE 30M
- EASY CHECK MODE FOR FAILURE DETECTION

HIGH STATIC PRESSURE HIDE AWAY // INVERTER + FS TYPE

A COMPLETE LINE UP OF EFFICIENT AND POWERFUL HIGH STATIC PRESSURE HIDE AWAY, FOR THE MOST DEMANDING CUSTOMERS, FROM 2.5 H.P. TO 6.0 H.P., SINGLE-PHASE AND THREE-PHASE

HIGH STATIC PRESSURE HIDE AWAY // INVERTER + FS TYPE

			2.5 H.P.	3.0 H.P.	4.0 H.P.	4.0 H.P.	5.0 H.P.	5.0 H.P.	6.0 H.P.
KIT			KIT-F24DD2E5	KIT-F28DD2E5	KIT-F34DD2E5	KIT-F34DD2E8	KIT-F43DD2E5	KIT-F43DD2E8	KIT-F50DD2E8
Indoor			CS-F24DD2E5	CS-F28DD2E5	CS-F34DD2E5	CS-F34DD2E5	CS-F43DD2E5	CS-F43DD2E5	CS-F50DD2E5
Outdoor			CU-L24DBE5	CU-L28DBE5	CU-L34DBE5	CU-L34DBE8	CU-L43DBE5	CU-L43DBE8	CU-L50DBE8
Wired remote control			CZ-RD513C	CZ-RD513C	CZ-RD513C	CZ-RD513C	CZ-RD513C	CZ-RD513C	CZ-RD513C
Cooling capacity	Nominal (Min-Max)	kW	6.30 (2.00-6.50)	7.10 (2.10-7.50)	10.00 (4.00-12.00)	10.00 (4.00-12.00)	12.50 (4.00-13.50)	12.50 (4.00-13.50)	14.00 (4.00-16.00)
	Nominal (Min-Max)	kCal/h	5,418 (1,720-5,590)	6,106 (1,806-6,450)	8,600 (3,440-10,320)	8,600 (3,440-10,320)	10,750 (3,440-11,610)	10,750 (3,440-11,610)	12,040 (3,440-13,760)
EER [1]	Nominal (Min-Max)		3.01 (3.33-2.71) B	3.01 (3.23-3.06) B	3.27 (2.96-3.43) A	3.27 (2.96-3.43) A	3.01 (2.86-3.00) B	3.01 (2.86-3.00) B	2.77 (2.76-2.96) D
Power input Cooling	Nominal (Min-Max)	kW	2.09 (0.6-2.4)	2.36 (0.65-2.45)	3.06 (1.35-3.5)	3.06 (1.35-3.5)	4.15 (1.4-4.5)	4.15 (1.4-4.5)	5.06 (1.45-5.4)
Heating capacity	Nominal (Min-Max)	kW	7.10 (2.10-7.50)	8.00 (2.20-8.50)	11.20 (4.00-13.50)	11.20 (4.00-13.50)	14.00 (4.00-15.50)	14.00 (4.00-15.50)	16.00 (4.00-18.00)
	Nominal (Min-Max)	kCal/h	6,106 (1,806-6,450)	6,880 (1,892-7,310)	9,632 (3,440-11,610)	9,632 (3,440-11,610)	12,040 (3,440-13,330)	12,040 (3,440-13,330)	13,760 (3,440-15,480)
COP [1]	Nominal (Min-Max)		3.41 (3.50-2.38) B	3.42 (3.38-2.62) B	3.41 (2.96-3.14) B	3.41 (2.96-3.14) B	3.21 (2.86-3.04) C	3.21 (2.86-3.04) C	3.30 (2.86-2.95) C
Power input Heating	Nominal (Min-Max)	kW	2.08 (0.6-3.15)	2.34 (0.65-3.25)	3.28 (1.35-4.3)	3.28 (1.35-4.3)	4.36 (1.4-5.1)	4.36 (1.4-5.1)	4.85 (1.4-6.1)
Annual Energy Consumption [2]		kWh	1,045	1,180	1,530	1,530	2,075	2,075	2,530
Indoor unit									
External static pressure [3]	High	mmAq	7	7	10	10	10	10	10
	Medium	mmAq	5	5	6.6	6.6	6.6	6.6	6.6
	Low	mmAq	4.1	4.1	5.1	5.1	5.1	5.1	5.6
Air Volume	High	m^3/h	1,320	1,320	2,280	2,280	2,400	2,400	2,700
	Medium	m^3/h	1,020	1,020	1,920	1,920	1,980	1,980	2,100
	Low	m^3/h	870	870	1,620	1,620	1,680	1,680	1,740
Moisture removal volume		l/h	3.8	4.3	6.0	6.0	7.9	7.9	9.0
Sound pressure Level [4]	Cooling (Hi / Lo)	dB(A)	45 / 41	45 / 41	49 / 45	49 / 45	49 / 45	49 / 45	49 / 45
	Heating (Hi / Lo)	dB(A)	43 / 39	43 / 39	47 / 44	47 / 44	47 / 44	47 / 44	47 / 44
Sound power Level	Cooling (Hi)	dB	61	61	64	64	64	64	64
	Heating (Hi)	dB	59	59	62	62	62	62	62
Dimensions. indoor	H x W x D	mm	290x1,000+100[5]x500	290x1,000+100[5]x500	360x1,000+100[5]x650	360x1,000+100[5]x650	360x1,000+100[5]x650	360x1,000+100[5]x650	360x1,000+100[5]x650
Net weight	Indoor	kg	35	35	48	48	48	48	48
Dust filter			No	No	No	No	No	No	No
Outdoor unit									
Power source		V	220 - 240	220 - 240	220 - 240	380 - 415	220 - 240	380 - 415	380 - 415
Connection		mm^2	4 x 1'5 to 2'5	4 x 1'5 to 2'5	4 x 1'5 to 2'5	4 x 1'5 to 2'5	4 x 1'5 to 2'5	4 x 1'5 to 2'5	4 x 1'5 to 2'5
Current Cooling	Nominal (Min / Max)	A	9.5	10.7	13.8	4.8	18.8	6.5	7.7
Current Heating	Nominal (Min / Max)	A	9.5	10.6	14.9	5.2	19.7	6.8	7.4
Air Volume	Cooling / Heating	m^3/h	2,880 / 2,880	2,880 / 2,880	5,880 / 5,880	5,880 / 5,880	5,880 / 5,880	5,880 / 5,880	5,880 / 5,880
Sound pressure Level [4]	Cooling (Hi)	dB(A)	47	48	52	52	53	53	54
	Heating (Hi)	dB(A)	49	50	54	54	55	55	56
Sound power Level	Cooling (Hi)	dB	63	64	66	66	67	67	68
	Heating (Hi)	dB	65	66	68	68	69	69	70
Dimensions	H x W x D	mm	795 x 900 x 320	795 x 900 x 320	1,340 x 900 x 320	1,340 x 900 x 320	1,340 x 900 x 320	1,340 x 900 x 320	1,340 x 900 x 320
Net weight		kg	71	71	110	110	110	110	105
Piping connections	Liquid pipe	inch (mm)	3/8" (9.52)	3/8" (9.52)	3/8" (9.52)	3/8" (9.52)	3/8" (9.52)	3/8" (9.52)	3/8" (9.52)
	Gas pipe	inch (mm)	5/8" (15.88)	5/8" (15.88)	5/8" (15.88)	5/8" (15.88)	5/8" (15.88)	5/8" (15.88)	5/8" (15.88)
Refrigerant Loading	R410A	kg	2.13	2.35	3.3	3.3	3.3	3.3	3.5
Elevation difference (in/out) [6]	Max	m	30	30	30	30	30	30	30
Piping length	Min - Max	m	7.5 - 50	7.5 - 50	7.5 - 50	7.5 - 50	7.5 - 50	7.5 - 50	7.5 - 50
Piping length without refrigerent increase	Max	m	30	30	30	30	30	30	30
Additional gas		g/m	50	50	50	50	50	50	50
Area control accessory			EKRORO wire	EKRORO wire	EKRORO wire	EKRORO wire	EKRORO wire	EKRORO wire	EKRORO wire
Operating range, outdoor [3]	Cooling Min / Max	°c	-5 / 43	-5 / 43	-5 / 43	-5 / 43	-5 / 43	-5 / 43	-5 / 43
	Heating Min / Max	°c	-20 / 24	-20 / 24	-20 / 24	-20 / 24	-20 / 24	-20 / 24	-20 / 24

GLOBAL REMARKS	Rating conditions	Cooling	Heating
	Inside air temperature	27°C DB / 19°C WB	20°C DB
	Outside air temperature	35°C DB / 24°C WB	7°C DB / 6°C WB

DB : Dry buld; WB : Wet buld

1) EER and COP, Energy Saving Classification, is at 220 - 240V (380 - 415V) only in accordance with EU directive 2002/31/EC.
2) The annual consumption is calculated by multiplying the input power at 220 - 240V (380 - 415V) by an average of 500-hr per year in cooling mode.
3) The specification listed on the table indicates values under the condition of 50Pa (5,1 mmAq) which are applied for factory default setting.
4) The sound pressure Level of the units shows the value measured of a position 1 meter in front of the main body and 1,5 from the ground The sound pressure is measured in accordance with Eurovent 6/C/006-97 specification.
5) Add 100mm for indoor unit or 70mm for outdoor unit for piping port.
6) When installing the outdoor unit at a higher position than the indoor unit.

KIT-F24DD2E5 // KIT-F28DD2E5 // KIT-F34DD2E5 // KIT-F34DD2E8 // KIT-F43DD2E5 // KIT-F43DD2E8 // KIT-F50DD2E8

CZ-RD513C

CU-L24DBE5
CU-L28DBE5

CU-L34DBE5 CU-L43DBE8
CU-L34DBE8 CU-L50DBE8
CU-L43DBE5

ENERGY EFFICIENCY AND ECOLOGY

- Maximum efficiency Inverter system
- R410A environmentally friendly refrigerant gas

COMFORT

- Cooling with low outdoor temperatures (down to -20 ºC)
- Automatic start after a power cut
- Automatic fan operation mode
- Soft dry operation mode
- Hot start mode
- Selection of temperature sensor at indoor unit or wired remote control

EASE OF USE

- Weekly On/Off timer (6 settings per day and 42 per week)
- Wired remote control

EASY INSTALLATION AND MAINTENANCE

- Installation using existing pipes
- High static pressure units ideal for shops and offices
- Selectable static pressure up to 10 mmAq
- Self-diagnostic function
- Ultra compact indoor unit

SPACE NEEDED FOR INSTALLATION

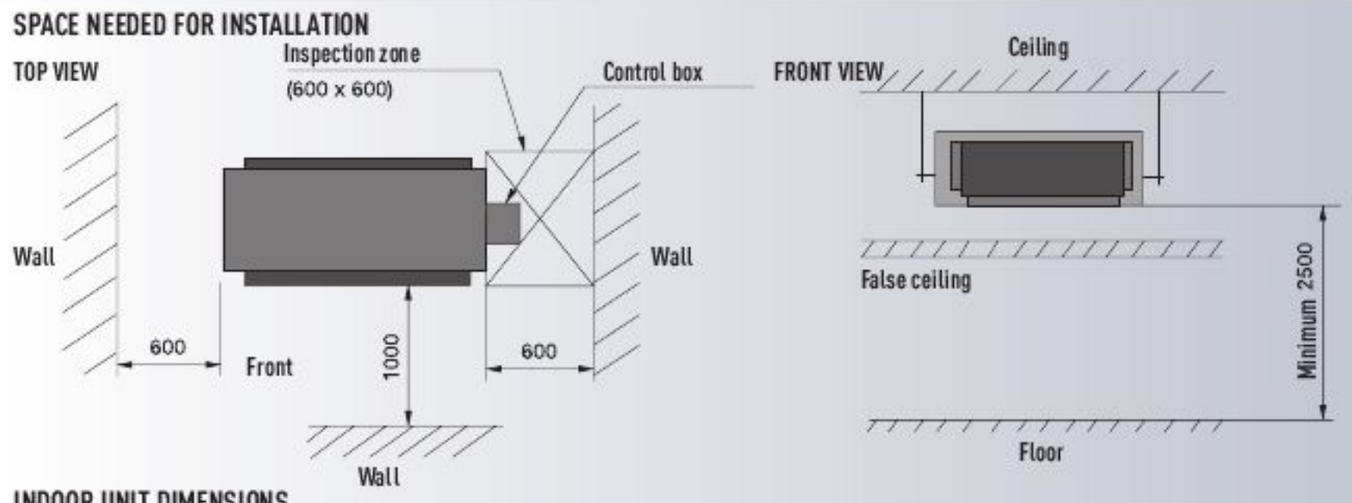

INDOOR UNIT DIMENSIONS

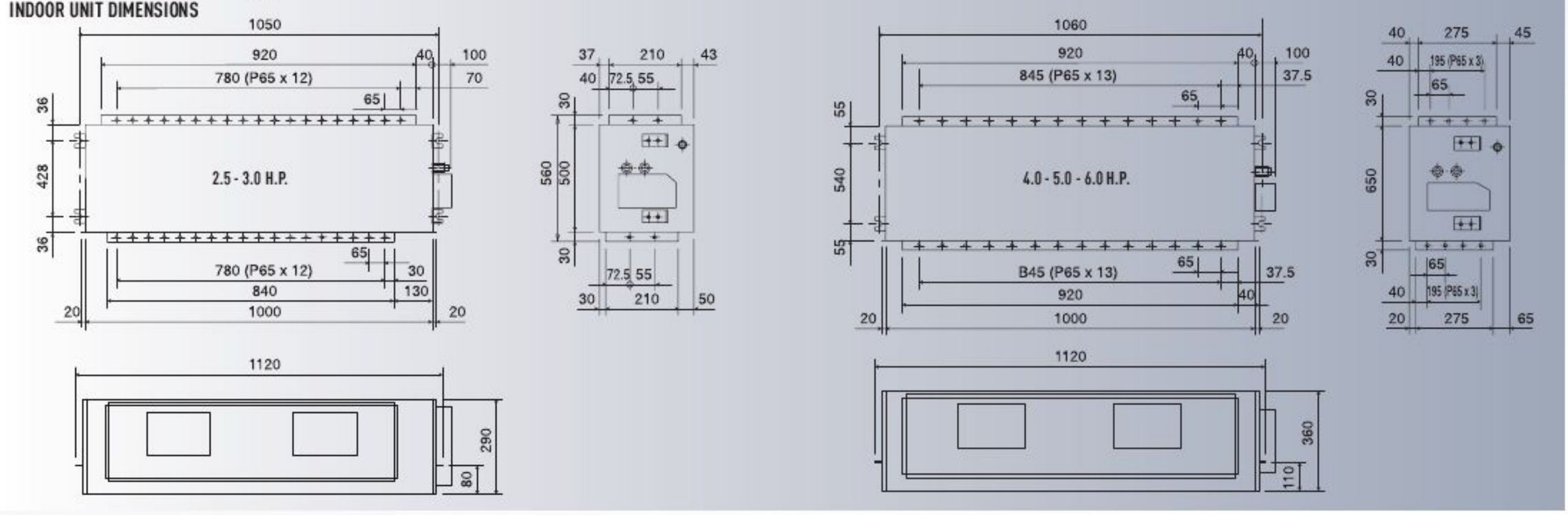

TECHNICAL ZOOM

- ULTRA COMPACT OUTDOOR UNITS (-40% REDUCED SIZE FOR THE CU-YL34HBE5)
- ECO MODE FOR 20% ENERGY SAVING
- COOLING WITH LOW OUTDOOR TEMPERATURES (DOWN TO -20 ºC)
- STATIC PRESSURE TILL 10MMAQ
- WEEKLY TIMER, 42 SETTINGS PER WEEK
- EASY CHECK MODE FOR FAILURE DETECTION

HIGH STATIC PRESSURE HIDE AWAY // INVERTER FS TYPE

COMPACT LINE UP OF INVERTER HIGH STATIC HIDE AWAY, FROM 1.0 H.P. TO 5.0 H.P., SINGLE-PHASE

HIGH STATIC PRESSURE HIDE AWAY // INVERTER FS TYPE

			2.5 H.P.	3.0 H.P.	4.0 H.P.	5.0 H.P.
KIT			**KIT-YH24DD2E5**	**KIT-YH28DD2E5**	**KIT-YH34DD2E5**	**KIT-YH43DD2E5**
Indoor			**CS-F24DD2E5**	**CS-F28DD2E5**	**CS-F34DD2E5**	**CS-F43DD2E5**
Outdoor			**CU-YL24HBE5**	**CU-YL28HBE5**	**CU-YL34HBE5**	**CU-YL43HBE5**
Wired remote control			**CZ-RD513C**	**CZ-RD513C**	**CZ-RD513C**	**CZ-RD513C**
Cooling capacity	Nominal (Min - Max)	kW	5.60 (2 - 6.30)	7.10 (2.10 - 7.70)	10.00 (3.8 - 10.50)	12.50 (3.80 - 13.00)
	Nominal (Min - Max)	kCal/h	4,816 (1,720 - 5,418)	6,106 (1,806 - 6,622)	8,600 (3,268 - 9,030)	10,750 (3,268 - 11,180)
EER [1]	Nominal (Min - Max)		2.81 (3.64 - 2.86) C	2.81 (3.23 - 2.96) C	2.81 (2.92 - 2.56) D	2.81 (2.92 - 2.77) C
Power input Cooling	Nominal (Min - Max)	kW	1.99 (0.55 - 2.20)	2.53 (0.65 - 2.60)	3.56 (1.30 - 4.10)	4.45 (1.30 - 4.70)
Heating capacity	Nominal (Min - Max)	kW	7.00 (2.10 - 7.60)	8.00 (2.20 - 8.30)	11.20 (3.80 - 12.50)	14.00 (3.80 - 14.50)
	Nominal (Min - Max)	kCal/h	6,020 (1,806 - 6,450)	6,880 (1,892 - 7,138)	9,632 (3,268 - 10,750)	12,040 (3,268 - 12,470)
COP [1]	Nominal (Min - Max)		2.81 (4.20 - 2.68) D	2.81 (3.67 - 2.59) D	3.01 (3.17 - 2.94) C	3.01 (3.17 - 2.90) C
Power input Heating	Nominal (Min - Max)	kW	2.49 (0.50 - 2.80)	2.85 (0.60 - 3.20)	3.72 (1.20 - 4.25)	4.65 (1.20 - 5.00)
Annual Energy Consumption [2]		kWh	995	1,265	1,780	2,225
Indoor unit						
External static pressure [3]	High	mmAq	7	7	10	10
	Medium	mmAq	5	5	6.6	6.6
	Low	mmAq	4.1	4.1	5.1	5.1
Air Volume	High	m^3/h	1,320	1,320	2,400	2,400
	Medium	m^3/h	1,020	1,020	1,980	1,980
	Low	m^3/h	870	870	1,680	1,680
Moisture removal volume		l/h	3.20	4.20	6.00	7.90
Sound pressure Level [4]	Cooling (Hi / Lo)	dB(A)	45 / 41	45 / 41	49 / 45	49 / 45
	Heating (Hi / Lo)	dB(A)	43 / 39	43 / 39	47 / 44	47 / 44
Sound power Level	Cooling (Hi)	dB	67	68	71	72
	Heating (Hi)	dB	68	69	73	73
Dimensions. indoor	H x W x D	mm	290 x 1,000+100 [5] x 500	290 x 1,000+100 [5] x 500	390 x 1,000+100 [5] x 650	390 x 1,000+100 [5] x 650
Net weight	Indoor	kg	35	35	48	48
Dust filter			No	No	No	No
Outdoor unit						
Power source		V	220 - 240	220 - 240	220 - 240	220 - 240
Connection		mm^2	4 x 1.5 to 2.5	4 x 1.5 to 2.5	4 x 1.5 to 2.5	4 x 1.5 to 2.5
Current Cooling	Nominal (Min / Max)	A	9.00	11.50	16.30	20.30
Current Heating	Nominal (Min / Max)	A	11.30	12.80	17.00	21.20
Air Volume	Cooling / Heating	m^3/h	2,880	2,880	5,880	5,880
Sound pressure Level [4]	Cooling (Hi)	dB(A)	49	50	53	54
	Heating (Hi)	dB(A)	51	52	56	56
Sound power Level	Cooling (Hi)	dB	67	68	71	72
	Heating (Hi)	dB	68	69	73	73
Dimensions	H x W x D	mm	795 x 875+70 [5] x 320	795 x 875+70 [5] x 320	795 x 900 x 320	1,170 x 900 x 320
Net weight		kg	65	65	66	94
Piping connections	Liquid pipe	inch (mm)	3/8" (9.52)	3/8" (9.52)	3/8" (9.52)	3/8" (9.52)
	Gas pipe	inch (mm)	5/8" (15.88)	5/8" (15.88)	5/8" (15.88)	5/8" (15.88)
Refrigerant Loading	R410A	kg	1.63	2.05	2.8	2.8
Elevation difference (in/out) [6]	Max	m	25	25	30	30
Piping length	Min - Max	m	7.5 - 30	7.5 - 30	7.5 - 50	7.5 - 50
Piping length without refrigerent increase	Max	m	30	30	30	30
Additional gas		g/m	50	50	50	50
Area control accessory			EKRORO wire	EKRORO wire	EKRORO wire	EKRORO wire
Operating range, outdoor [3]	Cooling Min / Max	°c	-5 / 43	-5 / 44	-5 / 45	-5 / 46
	Heating Min / Max	°c	-15 / 24	-15 / 25	-15 / 26	-15 / 27

GLOBAL REMARKS

Rating conditions	Cooling	Heating
Inside air temperature	27°C DB / 19°C WB	20°C DB
Outside air temperature	35°C DB / 24°C WB	7°C DB / 6°C WB

DB : Dry buld; WB : Wet buld

1) EER and COP, Energy Saving Classification, is at 220 - 240V (380 - 415V) only in accordance with EU directive 2002/31/EC.
2) The annual consumption is calculated by multiplying the input power at 220 - 240V (380 - 415V) by an average of 500-hr per year in cooling mode.
3) The specification listed on the table indicates values under the condition of 50Pa (5,1 mmAq) which are applied for factory default setting.
4) The sound pressure Level of the units shows the value measured of a position 1 meter in front of the main body and 1,5 from the ground The sound pressure is measured in accordance with Eurovent 6/C/006-97 specification.
5) Add 100mm for indoor unit or 70mm for outdoor unit for piping port.
6) When installing the outdoor unit at a higher position than the indoor unit.

KIT-YH24DD2E5 // KIT-YH28DD2E5 // KIT-YH34DD2E5 // KIT-YH43DD2E5

CZ-RD513C

CU-YL24HBE5
CU-YL28HBE5

CU-YL34HBE5

CU-YL43HBE5

ENERGY EFFICIENCY AND ECOLOGY

- Inverter system
- R410A environmentally friendly refrigerant gas

COMFORT

- Cooling with low outdoor temperatures (down to -15 ºC)
- Automatic start after a power cut
- Automatic fan operation mode
- Soft dry operation mode
- Hot start mode
- Selection of temperature sensor at indoor unit or wired remote control

EASE OF USE

- Weekly On/Off timer (6 settings per day and 42 per week)
- Wired remote control

EASY INSTALLATION AND MAINTENANCE

- Installation using existing pipes
- Selectable static pressure up to 10 mmAq
- Self-diagnostic function
- Condensation control
- Ultra compact indoor unit

SPACE NEEDED FOR INSTALLATION

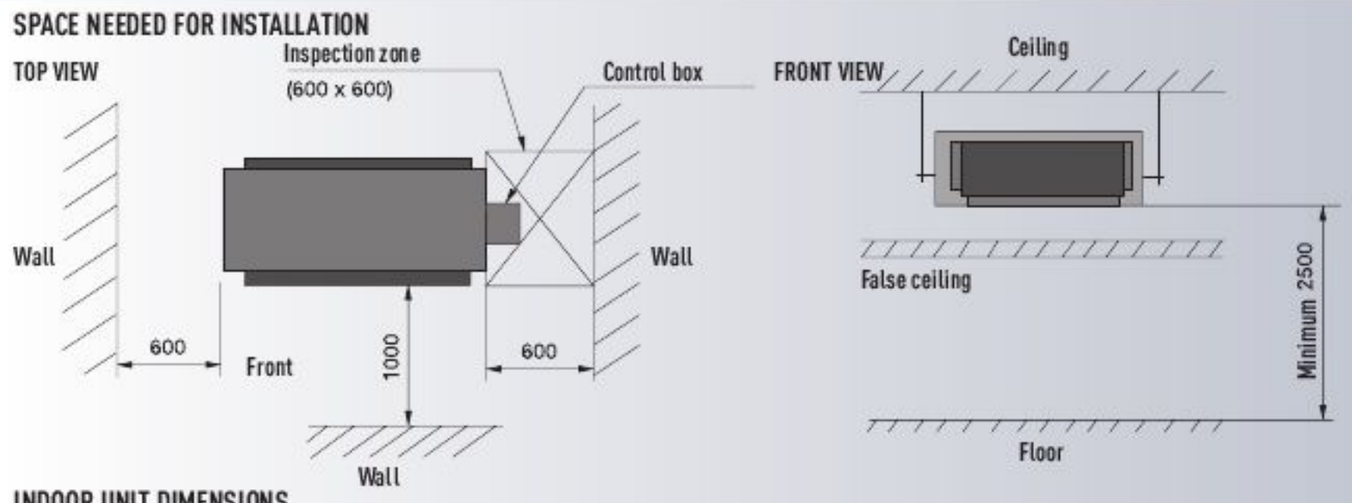

INDOOR UNIT DIMENSIONS

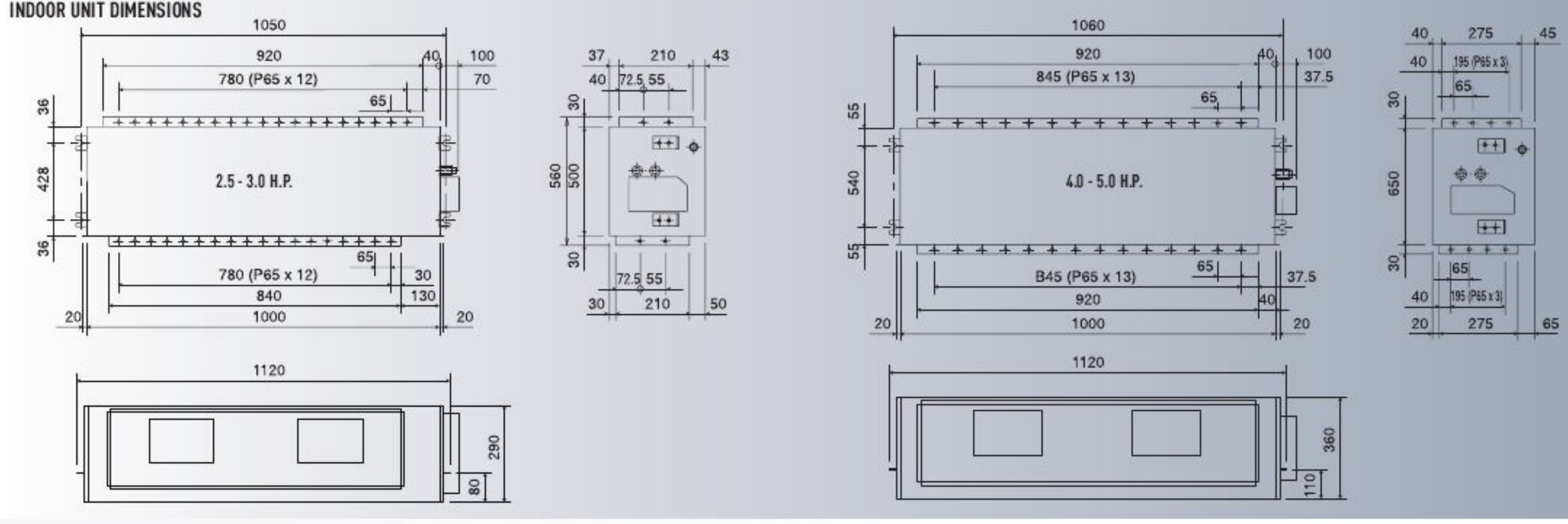

TECHNICAL ZOOM

+ STATIC PRESSURE TILL 10MMAQ
+ ECO MODE FOR 20% ENERGY SAVING
+ MAX ELEVATION DIFFERENCE 30M
+ EASY CHECK MODE FOR FAILURE DETECTION

HIGH STATIC PRESSURE HIDE AWAY // HEAT PUMP FS TYPE

FULL LINE UP OF HEAT PUMP NO-INVERTER HIGH STATIC PRESSURE HIDE AWAY, FROM 2.5 H.P. TO 6.0 H.P., SINGLE-PHASE AND THREE-PHASE

HIGH STATIC PRESSURE HIDE AWAY // HEAT PUMP FS TYPE

			2.5 H.P.	3.0 H.P.	3.0 H.P.	4.0 H.P.	4.0 H.P.	5.0 H.P.	6.0 H.P.
KIT			KIT-F24DD2E5-C	KIT-F28DD2E5-C	KIT-F28DD2E8-C	KIT-F34DD2E5-C	KIT-F34DD2E8-C	KIT-F43DD2E8-C	KIT-F50DD2E8-C
Indoor			CS-F24DD2E5	CS-F28DD2E5	CS-F28DD2E5	CS-F34DD2E5	CS-F34DD2E5	CS-F43DD2E5	CS-F50DD2E5
Outdoor			CU-B24DBE5	CU-B28DBE5	CU-B28DBE8	CU-B34DBE5	CU-B34DBE8	CU-B43DBE8	CU-B50DBE8
Wired remote control			CZ-RD513C	CZ-RD513C	CZ-RD513C	CZ-RD513C	CZ-RD513C	CZ-RD513C	CZ-RD513C
Cooling capacity	Nominal (Min - Max)	kW	6.60	7.30	7.30	10,00	10,00	12.50	13.50
	Nominal (Min - Max)	kCal/h	5,676	6,278	6,278	8,600	8,600	10,750	11,610
EER [1]	Nominal (Min - Max)		2.50 E	2.55 E	2.55 E	2,52 E	2,61 D	2.54 E	2.52 E
Power input Cooling	Nominal (Min - Max)	kW	2.64 (2.61-6.7)	2.86 (2.81-2.91)	2.86 (2.81-2.91)	3.97 (3.89-4.08)	3.83 (3.79-3.92)	4.92 (4.85-5.04)	5.36 (5.31-5.46)
Heating capacity	Nominal (Min - Max)	kW	7.10	8.00	8.00	11.20	11.20	14.00	15.00
	Nominal (Min - Max)	kCal/h	6,106	6,880	6,880	9,632	9,632	12,040	12,900
COP [1]	Nominal (Min - Max)		2.81 D	2.95 D	2.95 D	2.81 D	3.04 D	3.00 D	2.92 D
Power input Heating	Nominal (Min - Max)	kW	2.53 (2.45-2.62)	2.71 (2.62-2.8)	2.71 (2.62-2.8)	3.98 (3.9-4.05)	3.68 (3.63-3.75)	4.66 (4.56-4.78)	5.13 (5.08-5.18)
Annual Energy Consumption [2]		kWh	1,320	1,430	1,430	1,985	1,915	2,460	2,680
Indoor unit									
External static pressure [3]	High	mmAq	7	7	7	10	10	10	10
	Medium	mmAq	5	5	5	6.6	6.6	6.6	6.6
	Low	mmAq	4.1	4.1	4.1	5.1	5.1	5.1	5.6
Air Volume	High	m^3/h	1,320	1,320	1,320	2,280	2,280	2,400	2,700
	Medium	m^3/h	1,020	1,020	1,020	1,920	1,920	1,980	2,100
	Low	m^3/h	870	870	870	1,620	1,620	1,680	1,740
Moisture removal volume		l/h	3.8	4.3	4.3	6.0	6.0	7.9	8.6
Sound pressure Level [4]	Cooling (Hi / Lo)	dB(A)	45 / 41	45 / 41	45 / 41	49 / 45	49 / 45	49 / 45	49 / 45
	Heating (Hi / Lo)	dB(A)	43 / 39	43 / 39	43 / 39	47 / 44	47 / 44	47 / 44	47 / 44
Sound power Level	Cooling (Hi)	dB	61	61	61	64	64	64	64
	Heating (Hi)	dB	59	59	59	62	62	62	62
Dimensions. indoor	H x W x D	mm	290x1,000+100[5]x500	290x1,000+100x500	290x1,000+100x500	360x1,000+100[5]x650	360x1,000+100[5]x650	360x1,000+100[5]x650	360x1,000+100[5]x650
Net weight	Indoor	kg	35	35	35	48	48	48	48
Dust filter			No	No	No	No	No	No	No
Outdoor unit									
Power source		V	220 - 240	220 - 240	380 - 415	220 - 240	380 - 415	380 - 415	380 - 415
Connection		mm^2	4 x 1'5 to 2'5	4 x 1'5 to 2'5	4 x 1'5 to 2'5	4 x 1'5 to 2'5	4 x 1'5 to 2'5	4 x 1'5 to 2'5	4 x 1'5 to 2'5
Current Cooling	Nominal (Min / Max)	A	13.1	13.7	4.9	18.8	6.5	8.2	8.9
Current Heating	Nominal (Min / Max)	A	11.9	12.6	4.7	18.7	6.4	8.0	8.5
Air Volume	Cooling / Heating	m^3/h	3,600 / 3,600	3,780 / 3,780	3,780 / 3,780	5,640 / 5,640	5,640 / 5,640	5,640 / 5,640	5,760 / 5,760
Sound pressure Level [4]	Cooling (Hi)	dB(A)	50	52	52	55	55	56	56
	Heating (Hi)	dB(A)	51	53	53	56	56	57	57
Sound power Level	Cooling (Hi)	dB	66	67	67	69	69	70	70
	Heating (Hi)	dB	67	68	68	70	70	71	71
Dimensions	H x W x D	mm	795 x 900 x 320	795 x 900 x 320	795 x 900 x 320	1,170 x 900 x 320	1,170 x 900 x 320	1,170 x 900 x 320	1,170 x 900 x 320
Net weight		kg	69	69	69	102	100	102	102
Piping connections	Liquid pipe	inch (mm)	3/8" (9.52)	3/8" (9.52)	3/8" (9.52)	3/8" (9.52)	3/8" (9.52)	3/8" (9.52)	3/8" (9.52)
	Gas pipe	inch (mm)	5/8" (15.88)	5/8" (15.88)	5/8" (15.88)	5/8" (15.88)	5/8" (15.88)	5/8" (15.88)	5/8" (15.88)
Refrigerant Loading	R410A	kg	1.7	2.05	2.05	2.7	2.7	3.1	3.4
Elevation difference (in/out) [6]	Max	m	30	30	30	30	30	30	30
Piping length	Min - Max	m	7.5-50	7.5-50	7.5-50	7.5-50	7.5-50	7.5-50	7.5-50
Piping length without refrigerent increase	Max	m	30	30	30	30	30	30	30
Additional gas		g/m	50	50	50	50	50	50	50
Area control accessory			EKRORO wire	EKRORO wire	EKRORO wire	EKRORO wire	EKRORO wire	EKRORO wire	EKRORO wire
Operating range, outdoor [3]	Cooling Min / Max	°c	5 / 43	5 / 43	5 / 43	5 / 43	5 / 43	5 / 43	5 / 43
	Heating Min / Max	°c	-10 / 24	-10 / 24	-10 / 24	-10 / 24	-10 / 24	-10 / 24	-10 / 24

GLOBAL REMARKS

Rating conditions	Cooling	Heating
Inside air temperature	27°C DB / 19°C WB	20°C DB
Outside air temperature	35°C DB / 24°C WB	7°C DB / 6°C WB

DB : Dry buld; WB : Wet buld

1) EER and COP, Energy Saving Classification, is at 220 - 240V (380 - 415V) only in accordance with EU directive 2002/31/EC.
2) The annual consumption is calculated by multiplying the input power at 220 - 240V (380 - 415V) by an average of 500-hr per year in cooling mode.
3) The specification listed on the table indicates values under the condition of 50Pa (5,1 mmAq) which are applied for factory default setting.
4) The sound pressure Level of the units shows the value measured of a position 1 meter in front of the main body and 1,5 from the ground The sound pressure is measured in accordance with Eurovent 6/C/006-97 specification.
5) Add 100mm for indoor unit or 70mm for outdoor unit for piping port.
6) When installing the outdoor unit at a higher position than the indoor unit.

KIT-F24DD2E5-C // KIT-F28DD2E5-C // KIT-F28DD2E8-C // KIT-F34DD2E5-C // KIT-F34DD2E8-C // KIT-F43DD2E8-C // KIT-F50DD2E8-C

CZ-RD513C

CU-B24DBE5 CU-B28DBE8
CU-B28DBE5

CU-B34DBE5 CU-B43DBE8
CU-B34DBE8 CU-B50DBE8

ENERGY EFFICIENCY AND ECOLOGY
+ R410A environmentally friendly refrigerant gas

COMFORT
+ Automatic start after a power cut
+ Automatic fan operation mode
+ Soft dry operation mode
+ Hot start mode
+ Selection of temperature sensor at the indoor unit or the wired remote control

EASE OF USE
+ Weekly On/Off timer (6 settings per day and 42 per week)
+ Wired remote control

EASY INSTALLATION AND MAINTENANCE
+ High static pressure units ideal for shops and offices
+ Selectable static pressure up to 10 mmAq
+ Self-diagnostic function
+ Ultra compact indoor unit

SPACE NEEDED FOR INSTALLATION

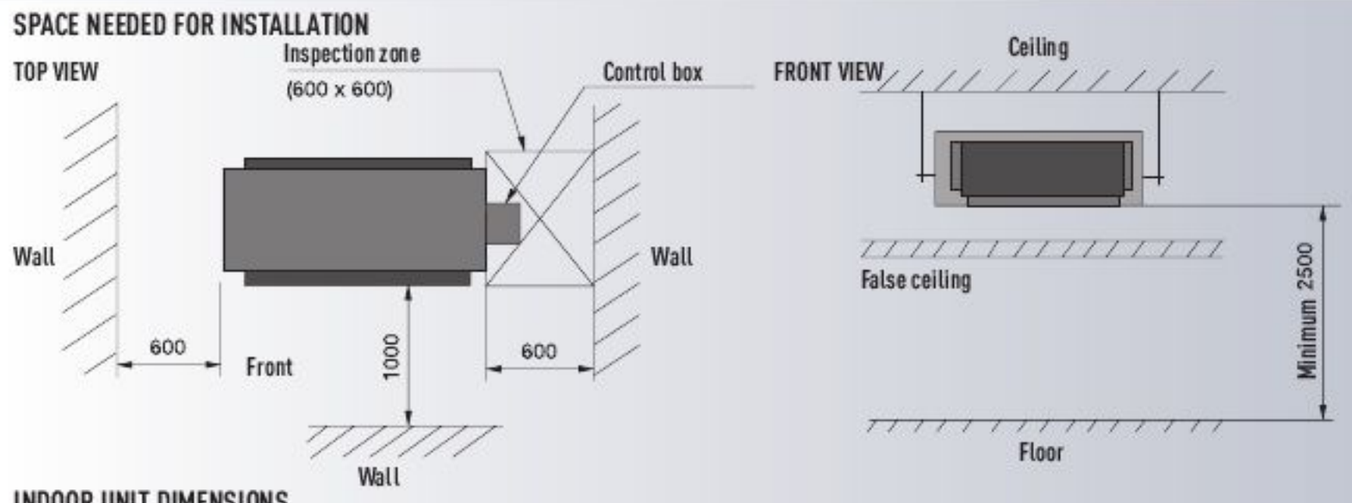

INDOOR UNIT DIMENSIONS

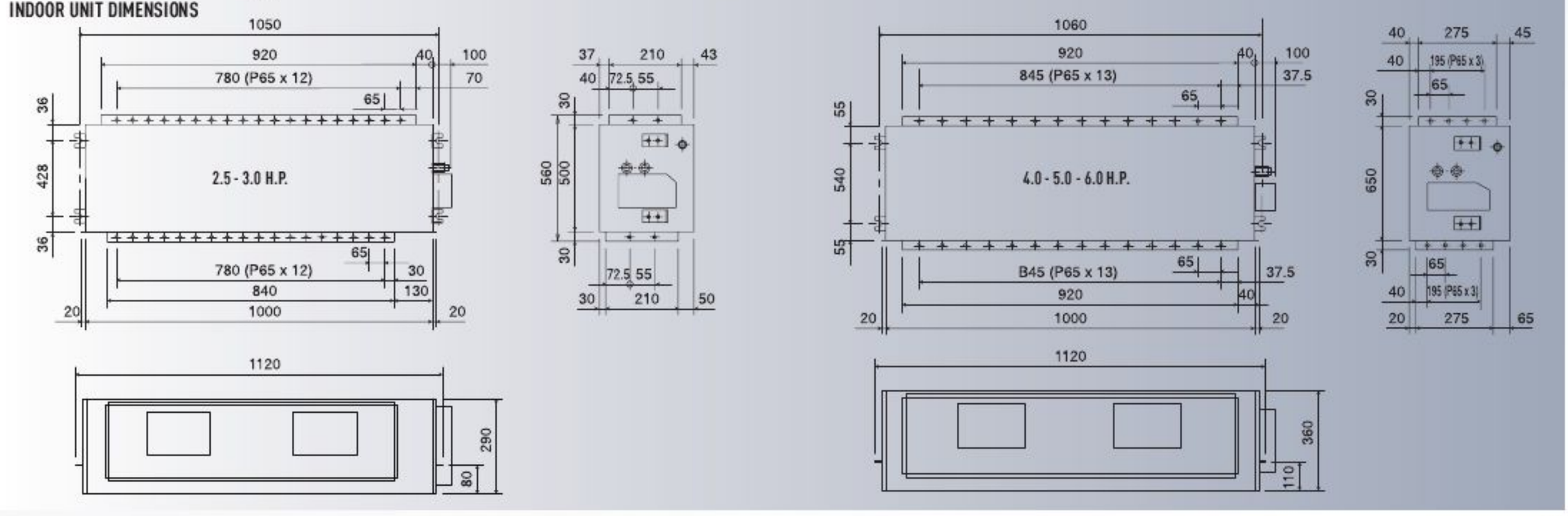

TECHNICAL ZOOM

- EASY INSTALLATION ON THE CAP CEILING 60X60
- OPERATION DOWN TO -10ºC IN COOLING AND HEATING MODES
- PIPING LENGTH UP TO 30M
- MAXIMUM ELEVATION DIFFERENCE UP TO 20M
- ULTRA COMPACT OUTDOOR UNITS FOR EASY INSTALLATION
- 24 HOUR ON/OFF TIMER

4-WAY 60X60 CASSETTE FS // INVERTER TYPE

SMALL AND POWERFUL, IDEAL FOR OFFICES AND RESTAURANTS

OPTIONAL

4-WAY 60X60 CASSETTE FS // INVERTER TYPE

			1 H.P.	1.5 H.P.	2 H.P.	2.25 H.P.
KIT			KIT-E10-HB4EA	KIT-E15-HB4EA	KIT-E18-HB4EA	KIT-E21-HB4EA
Indoor			CS-E10HB4EA	CS-E15HB4EA	CS-E18HB4EA	CS-E21HB4EA
Outdoor			CU-E10HBEA	CU-E15HBEA	CU-E18HBEA	CU-E21HBEA
Panel			CZ-BT20E	CZ-BT20E	CZ-BT20E	CZ-BT20E
Wireless control	Included on the kit		Include on the indoor unit	Include on the indoor unit	Include on the indoor unit	Include on the indoor unit
Cooling capacity	Nominal (Min - Max)	kW	2.50 (0.60 - 3.20)	4.10 (0.9 - 4.8)	4.8 (0.9 - 5.70)	5.9 (0.9 - 6.3)
	Nominal (Min - Max)	kCal/h	2,150 (516 - 2,752)	3,530 (770 - 4,130)	4,130 (770 - 4,900)	5,070 (770 - 5,420)
EER [1]	Nominal (Min - Max)		4.03 (4.14 - 3.68) A	3.15 (3.48 - 3.27) B	3.14 (3.53 - 2.95) B	2.88 (3.52 - 2.86) C
Power input Cooling	Nominal (Min - Max)	kW	0.620 (0.145 - 0.870)	1.300 (0.255 - 1.170)	1.539 (0.255 - 1.930)	2.050 (0.255 - 2.200)
Heating capacity	Nominal (Min - Max)	kW	3.20 (0.60 - 5.10)	5.10 (0.9 - 6.20)	5.60 (0.90 - 7.10)	7 (0.9 - 8.0)
	Nominal (Min - Max)	kCal/h	2,752 (516 - 4,300)	4,390 (770 - 5,330)	4,820 (770 - 6,110)	6,020 (770 - 6,880)
COP [1]	Nominal (Min - Max)		3.90 (4.80 - 3.51) A	2.88 (3.46 - 2.84) D	2.95 (3.46 - 2.90) D	2.86 (3.46 - 2.84) D
Power input Heating	Nominal (Min - Max)	kW	0.820 (0.125 - 1.450)	1.770 (0.260 - 2.180)	1.900 (0.260 - 2.450)	2.450 (0.260 - 2.820)
Annual Energy Consumption [2]		kWh	310	650	765	1,025
Indoor unit						
Air Volume	Cooling / Heating	m³/h	630 / 648	630 / 648	660 / 690	768 / 840
Moisture removal volume		l/h	2.3	2.3	2.6	3.3
Sound pressure Level [3]	Cooling (Hi / Lo / S - Lo)	dB(A)	34 / 26 / 23	34 / 26 / 23	36 / 28 / 25	41 / 33 / 30
	Heating (Hi / Lo / S - Lo)	dB(A)	35 / 28 / 25	35 / 28 / 25	37 / 29 / 26	42 / 34 / 31
Sound power Level	Cooling (Hi)	dB	47	47	49	54
	Heating (Hi)	dB	58	48	50	55
Dimensions	Indoor (H x W x D)	mm	260 x 575 x 575	260 x 575 x 575	260 x 575 x 575	260 x 575 x 575
	Panel (H x W x D)	mm	51 x 700 x 700	51 x 700 x 700	51 x 700 x 700	51 x 700 x 700
Net weight	Indoor	kg	18	18	18	18
	Panel	kg	2.5	2.5	2.5	2.5
Dust filter			Yes	Yes	Yes	Yes
Antialergic filter	Optional		CZ-SA11P	CZ-SA11P	CZ-SA11P	CZ-SA11P
Outdoor unit						
Power source		V	220 - 240	220 - 240	220 - 240	220 - 240
Connection		mm²	4 x 1.5 to 2.5	4 x 1.5 to 2.5	4 x 1.5 to 2.5	4 x 1.5 to 2.5
Current Cooling	Nominal (Min / Max)	A	2.9	6.0	7.0	9.2
Current Heating	Nominal (Min / Max)	A	3.8	8.0	8.5	10.9
Air Volume	Cooling / Heating	m³/h	1,728	2,808	2,400	2568
Sound pressure Level [3] (Hi)	Cooling	dB(A)	45	45	47	49
	Heating	dB(A)	46	47	48	49
Sound power Level (Hi)	Cooling	dB	58	58	60	62
	Heating	dB	59	60	61	62
Dimensions	H x W x D	mm	540 x 780+70 [4] x 289	750 x 875+70 [4] x 345	750 x 875+70 [4] x 345	750 x 875+70 [4] x 345
Net weight		kg	35	48	48	48
Piping connections	Liquid pipe	inch (mm)	1/4" (6.35)	1/4" (6.35)	1/4" (6.35)	1/4" (6.35)
	Gas pipe	inch (mm)	3/8" (9.52)	1/2" (12.70)	1/2" (12.70)	1/2" (12.70)
Refrigerant Loading	R410A	kg	1.15	1.23	1.06	1.06
Elevation difference (in/out) [5]	Max	m	15	15	20	20
Piping length	Min - Max	m	3 - 20	3 - 20	3 - 30	3 - 30
Piping length without refrigerent increase	Max	m	10	10	10	10
Additional gas		g/m	20	20	20	20
Operating range, outdoor [3]	Cooling (Min / Max)	°c	- 10 / 43	- 10 / 43	- 10 / 43	- 10 / 43
	Heating (Min / Max)	°c	- 10 / 24	- 10 / 24	- 10 / 24	- 10 / 24

GLOBAL REMARKS

Rating conditions	Cooling	Heating
Inside air temperature	27°C DB / 19°C WB	20°C DB
Outside air temperature	35°C DB / 24°C WB	7°C DB / 6°C WB

DB : Dry buld; WB : Wet buld

1) EER and COP, Energy Saving Classification, is at 220 - 240V (380 - 415V) only in accordance with EU directive 2002/31/EC.
2) The annual consumption is calculated by multiplying the input power at 220 - 240V (380 - 415V) by an average of 500-hr per year in cooling mode.
3) The sound pressure Level of the units shows the value measured of a position 1 meter in front of the main body and 1,5 from the ground. The sound pressure is measured in accordance with Eurovent 6/C/006-97 specification.
4) 70mm for piping port.
5) When installing the outdoor unit at a higher position than the indoor unit.

INCLUDED WITH THE OUTDOOR UNIT

CU-E10HBEA
CU-E15HBEA
CU-E18HBEA
CU-E21HBEA

KIT-E10-HB4EA // KIT-E15-HB4EA // KIT-E18-HB4EA // KIT-E21-HB4EA

HEALTHY AIR
- CZ-SA14P Alleru-buster antiallergic filter (optional)
- Odour-removing function

ENERGY EFFICIENCY AND ECOLOGY
- Maximum efficiency Inverter system

COMFORT
- Super Quiet mode
- Powerful mode
- Automatic vertical airflow control
ambient temperature
- Hot start mode
- 24 hour On/Off timer
- Automatic restart after power cut

EASE OF USE
- Ergonomic infrared remote control

EASY INSTALLATION AND MAINTENANCE
- Removable, washable panel of the indoor unit
- Top panel maintenance access for the outdoor unit

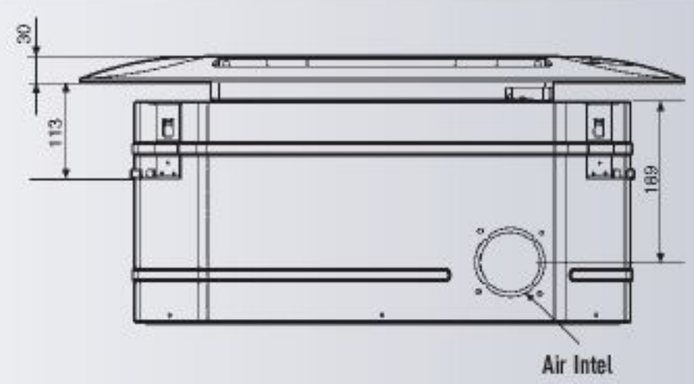

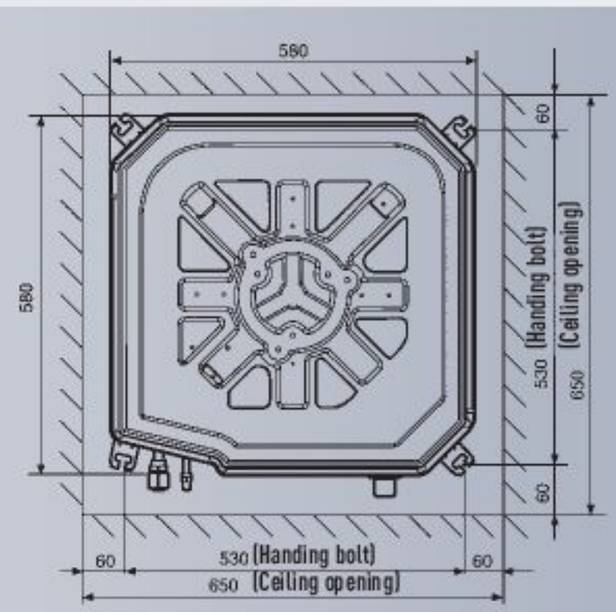

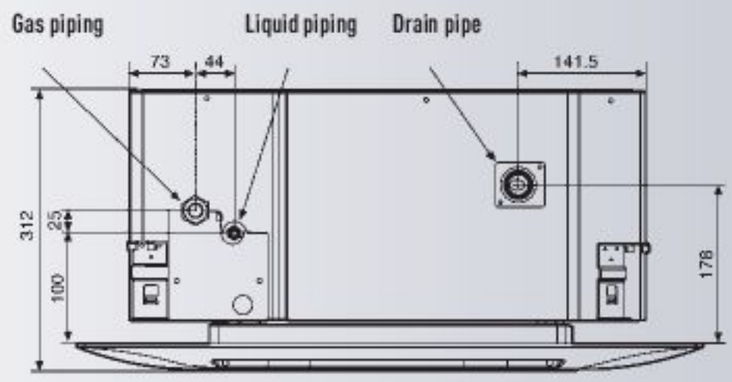

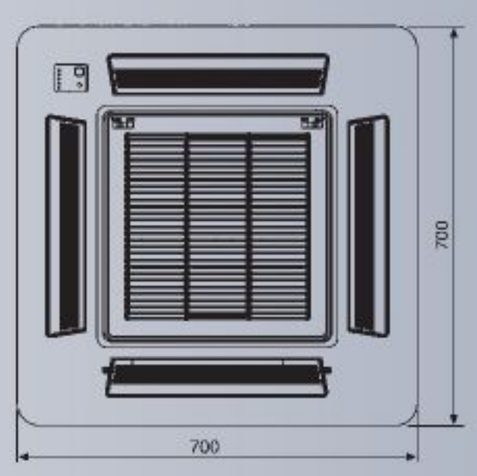

TECHNICAL ZOOM

- HIGHER ENERGY CLASS FOR HIGH SAVINGS, EVEN AT -20°C
- ECO MODE FOR 20% ENERGY SAVING
- WEEKLY TIMER, 42 SETTINGS PER WEEK
- 3 OPENING ANGLES FOR THE PRE-PROGRAMMED GRILLES
- 30 M MAXIMUM ELEVATION DIFFERENCE
- EASY CHECK MODE FOR FAILURE DETECTION

4-WAY 90X90 CASSETTE // INVERTER + FS TYPE

A COMPLETE LINE UP OF COMPACT, EFFICIENT , QUIETER AND POWERFUL CASSETTE 90X90, FOR THE MOST DEMANDING CUSTOMERS, FROM 2.5 H.P. TO 6.0 H.P., SINGLE-PHASE AND THREE-PHASE

*OPTIONAL

4-WAY 90X90 CASSETTE // INVERTER + FS TYPE

			2.5 H.P.	3.0 H.P.	4.0 H.P.	4.0 H.P.	5.0 H.P.	5.0 H.P.	6.0 H.P.
KIT			KIT-F24DB4E5	KIT-F28DB4E5	KIT-F34DB4E5	KIT-F34DB4E8	KIT-F43DB4E5	KIT-F43DB4E8	KIT-F50DB4E8
Indoor			CS-F24DB4E5	CS-F28DB4E5	CS-F34DB4E5	CS-F34DB4E5	CS-F43DB4E5	CS-F43DB4E5	CS-F50DB4E5
Outdoor			CU-L24DBE5	CU-L28DBE5	CU-L34DBE5	CU-L34DBE8	CU-L43DBE5	CU-L43DBE8	CU-L50DBE8
Panel			CZ-BT03P	CZ-BT03P	CZ-BT03P	CZ-BT03P	CZ-BT03P	CZ-BT03P	CZ-BT03P
Wireless control	Included on the kit		CZ-RL513B	CZ-RL513B	CZ-RL513B	CZ-RL513B	CZ-RL513B	CZ-RL513B	CZ-RL513B
Wired remote control	Optional		CZ-RD513C	CZ-RD513C	CZ-RD513C	CZ-RD513C	CZ-RD513C	CZ-RD513C	CZ-RD513C
Cooling capacity	Nominal (Min-Max)	kW	6.30 (2.10-7.10)	7.10 (2.20-8.00)	10.00 (4.00-12.00)	10.00 (4.00-12.00)	12.50 (4.00-14.00)	12.50 (4.00-14.00)	14.00 (4.00-16.00)
	Nominal (Min-Max)	kCal/h	5,418 (1,806-6,106)	6,106 (1,892-6,880)	8,600 (3,440-10,320)	8,600 (3,440-10,320)	10,750 (3,440-12,040)	10,750 (3,440-12,040)	12,040 (3,440-13,760)
EER [1]	Nominal (Min-Max)		3.71 (4.20-3.23) A	3.55 (3.67-3.34) A	3.86 (3.48-3.75) A	3.86 (3.48-3.75) A	3.43 (3.34-3.69) A	3.43 (3.34-3.69) A	3.01 (3.34-3.23) B
Power input Cooling	Nominal (Min-Max)	kW	1.70 (0.50-2.20)	2.00 (0.60-2.40)	2.59 (1.15-3.20)	2.59 (1.15-3.20)	3.64 (1.20-3.80)	3.64 (1.20-3.80)	4.65 (1.20-4.95)
Heating capacity	Nominal (Min-Max)	kW	7.10 (2.20-8.00)	8.00 (2.30-8.50)	11.20 (4.00-14.00)	11.20 (4.00-14.00)	14.00 (4.00-16.00)	14.00 (4.00-16.00)	16.00 (4.00-18.00)
	Nominal (Min-Max)	kCal/h	6,106 (1,892-6,880)	6,880 (1,978-7,310)	9.632 (3,440-12,040)	9.632 (3,440-12,040)	12,040 (3,440-13,760)	12,040 (3,440-13,760)	13,760 (3,440-15,480)
COP [1]	Nominal (Min-Max)		3.86 (4.40-2.58) A	3.79 (3.83-2.65) A	3.86 (3.64-3.41) A	3.86 (3.64-3.41) A	3.61 (3.48-3.27) A	3.61 (3.48-3.27) A	3.41 (3.48-3.05) B
Power input Heating	Nominal (Min-Max)	kW	1.84 (0.50-3.10)	2.11 (0.60-3.20)	2.90 (1.10-4.10)	2.90 (1.10-4.10)	3.88 (1.15-4.90)	3.88 (1.15-4.90)	4.69 (1.15-5.90)
Annual Energy Consumption [2]		kWh	850	1000	1295	1295	1820	1820	2325
Indoor unit									
Air Volume	Cooling / Heating	m³/h	1,080 / 1,080	1,200 / 1,200	1,620 / 1,620	1,620 / 1,620	1,860 / 1,860	1,860 / 1,860	1,920 / 1,920
Moisture removal volume		l/h	3.6	4.2	6.0	6.0	7.9	7.9	9.0
Sound pressure Level [3]	Cooling (Hi / Lo)	dB(A)	36 / 32	38 / 33	42 / 37	42 / 37	46 / 41	46 / 41	47 / 42
	Heating (Hi / Lo)	dB(A)	36 / 32	38 / 33	42 / 37	42 / 37	46 / 41	46 / 41	47 / 42
Sound power Level	Cooling (Hi)	dB	51	53	57	57	61	61	62
	Heating (Hi)	dB	51	53	57	57	61	61	62
Dimensions	Indoor (H x W x D)	mm	246 x 840 x 840	246 x 840 x 840	288 x 840 x 840	288 x 840 x 840	288 x 840 x 840	288 x 840 x 840	288 x 840 x 840
	Panel (H x W x D)	mm	45 x 950 x 950	45 x 950 x 950	45 x 950 x 950	45 x 950 x 950	45 x 950 x 950	45 x 950 x 950	45 x 950 x 950
Net weight	Indoor	kg	26	26	28.5	28.5	28.5	28.5	28.5
	Panel	kg	4.5	4.5	4.5	4.5	4.5	4.5	4.5
Dust filter			Yes	Yes	Yes	Yes	Yes	Yes	Yes
Antialergic filter	Optional		CZ-SA11P	CZ-SA11P	CZ-SA11P	CZ-SA11P	CZ-SA11P	CZ-SA11P	CZ-SA11P
Outdoor unit									
Power source		V	220 - 240	220 - 240	220 - 240	380 - 415	220 - 240	380 - 415	380 - 415
Connection		mm²	4 x 1'5 to 2'5	4 x 1'5 to 2'5	4 x 1'5 to 2'5	4 x 1'5 to 2'5	4 x 1'5 to 2'5	4 x 1'5 to 2'5	4 x 1'5 to 2'5
Current Cooling	Nominal (Min / Max)	A	7.7	9.2	11.7	4.1	16.5	5.8	7.1
Current Heating	Nominal (Min / Max)	A	8.4	9.6	13.2	4.6	17.6	6.1	7.2
Air Volume	Cooling / Heating	m³/h	2,880 / 2,880	2,880 / 2,880	5,880 / 5,880	5,880 / 5,880	5,880 / 5,880	5,880 / 5,880	5,880 / 5,880
Sound pressure Level [3]	Cooling (Hi)	dB(A)	47	48	52	52	53	53	54
	Heating (Hi)	dB(A)	49	50	54	54	55	55	56
Sound power Level	Cooling (Hi)	dB	63	64	66	66	67	67	68
	Heating (Hi)	dB	65	66	68	68	69	69	70
Dimensions	H x W x D	mm	795 x 900 x 320	795 x 900 x 320	1,340 x 900 x 320	1,340 x 900 x 320	1,340 x 900 x 320	1,340 x 900 x 320	1,340 x 900 x 320
Net weight		kg	71	71	110	110	105	105	105
Piping connections	Liquid pipe	inch (mm)	3/8" (9.52)	3/8" (9.52)	3/8" (9.52)	3/8" (9.52)	3/8" (9.52)	3/8" (9.52)	3/8" (9.52)
	Gas pipe	inch (mm)	5/8" (15.88)	5/8" (15.88)	5/8" (15.88)	5/8" (15.88)	5/8" (15.88)	5/8" (15.88)	5/8" (15.88)
Refrigerant Loading	R410A	kg	2.13	2.35	3.3	3.3	3.3	3.3	3.5
Elevation difference (in/out) [4]	Max	m	30	30	30	30	30	30	30
Piping length	Min - Max	m	7.5 - 50	7.5 - 50	7.5 - 50	7.5 - 50	7.5 - 50	7.5 - 50	7.5 - 50
Piping length without refrigerent increase	Max	m	30	30	30	30	30	30	30
Additional gas		g/m	50	50	50	50	50	50	50
Area control accessory			EKRORO wire	EKRORO wire	EKRORO wire	EKRORO wire	EKRORO wire	EKRORO wire	EKRORO wire
Operating range, outdoor [3]	Cooling Min / Max	°c	-5 / 43	-5 / 43	-5 / 43	-5 / 43	-5 / 43	-5 / 43	-5 / 43
	Heating Min / Max	°c	-20 / 24	-20 / 24	-20 / 24	-20 / 24	-20 / 24	-20 / 24	-20 / 24

GLOBAL REMARKS

Rating conditions	Cooling	Heating
Inside air temperature	27°C DB / 19°C WB	20°C DB
Outside air temperature	35°C DB / 24°C WB	7°C DB / 6°C WB

DB : Dry buld; WB : Wet buld

1) EER and COP classification is at 220 - 240V in accordance with EU directive 2002/31/EC
2) The annual consumption is calculated by multiplying the input power at 220 - 240V by an avarage of 500-hr per year in cooling mode
3) The sound pressure Level of the units shows the value measured of a position 1 meter in front of the main body and 1,5 from the ground. The sound pressure is measured in accordance with Eurovent 6/C/006-97 specification
4) When installing the outdoor unit at a higher position than the indoor unit

CZ-RL513B
INCLUDED WITH THE OUTDOOR UNIT

CZ-RD513C

CU-L24DBE5
CU-L28DBE5

CU-L34DBE5 CU-L43DBE8
CU-L34DBE8 CU-L50DBE8
CU-L43DBE5

KIT-F24DB4E5 // KIT-F28DB4E5 // KIT-F34DB4E5 // KIT-F34DB4E8 // KIT-F43DB4E5 // KIT-F43DB4E8 // KIT-F50DB4E8

HEALTHY AIR
- CZ-SA11P Alleru-buster antiallergic filter (optional)

ENERGY EFFICIENCY AND ECOLOGY
- Maximum efficiency Inverter system
- R410A environmentally friendly refrigerant gas

COMFORT
- Cooling with low outdoor temperatures (down to -20 ºC)
- 3 types of air emission (3 opening angles for the pre-programmed grilles)
- Automatic deflectors
- Automatic start after a power cut
- Automatic fan operation mode

EASE OF USE
- Weekly On/Off timer (6 settings per day and 42 per week)
- Infrared remote control
- Optional wired remote control

EASY INSTALLATION AND MAINTENANCE
- Installation using existing pipes
- Drain pump (up to 750 mm)
- Self-diagnostic function
- Condensation control
- Removable, washable indoor unit panel

SPACE NEEDED FOR INSTALLATION

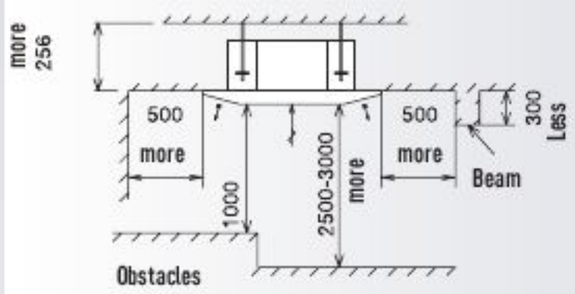

DRAINAGE

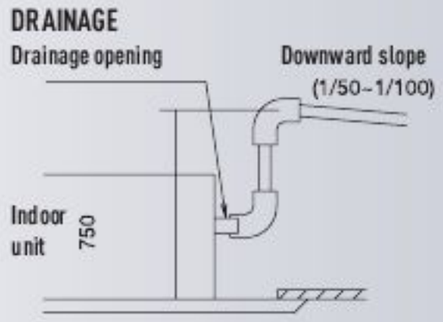

INDOOR UNIT DIMENSIONS // CS-F24DB4E5 // CS-F28DB4E5

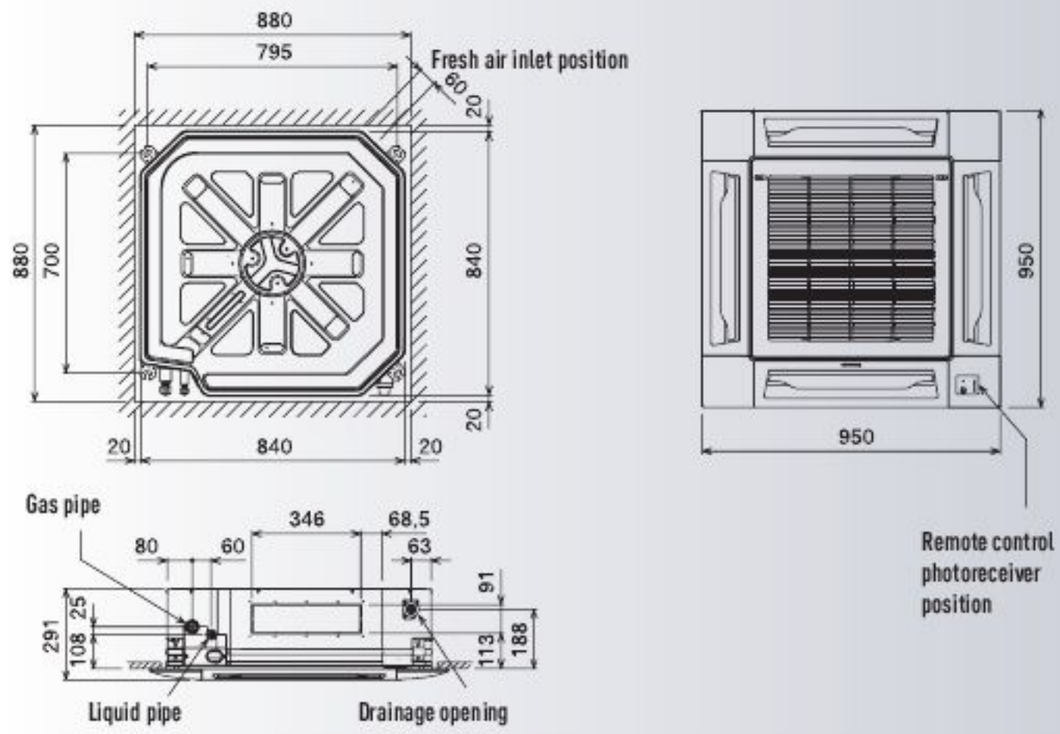

INDOOR UNIT DIMENSIONS // CS-F34DB4E5 // CS-F43DB4E5 // CS-F50DB4E5

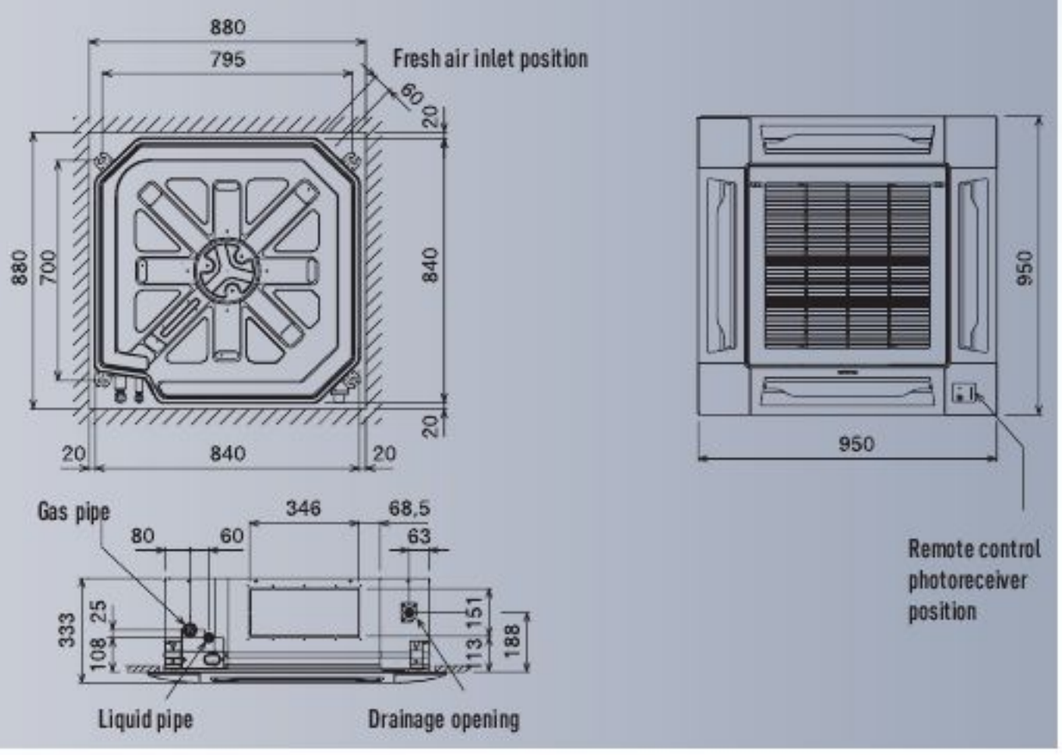

TECHNICAL ZOOM

- ULTRA COMPACT OUTDOOR UNITS (-40% REDUCED SIZE FOR THE CU-YL34HBE5)
- ECO MODE FOR 20% ENERGY SAVING
- WEEKLY TIMER, 42 SETTINGS PER WEEK
- 3 OPENING ANGLES FOR THE PRE-PROGRAMMED GRILLES
- 25 M MAXIMUM ELEVATION DIFFERENCE
- EASY CHECK MODE FOR FAILURE DETECTION

4-WAY 90X90 CASSETTE // INVERTER FS TYPE

COMPACT LINE UP OF INVERTER CASSETTE, FROM 2.5 H.P. TO 5.0 H.P., SINGLE-PHASE

*OPTIONAL

4-WAY 90X90 CASSETTE // INVERTER FS TYPE

			2.5 H.P.	3.0 H.P.	4.0 H.P.	5.0 H.P.
KIT			KIT-YH24DB4E5	KIT-YH28DB4E5	KIT-YH34DB4E5	KIT-YH43DB4E5
Indoor			CS-F24DB4E5	CS-F28DB4E5	CS-F34DB4E5	CS-F43DB4E5
Outdoor			CU-YL24HBE5	CU-YL28HBE5	CU-YL34HBE5	CU-YL43HBE5
Panel			CZ-BT03P	CZ-BT03P	CZ-BT03P	CZ-BT03P
Wireless control	Included on the kit		CZ-RL513C	CZ-RL513C	CZ-RL513C	CZ-RL513C
Wired remote control	Optional		CZ-RL513B	CZ-RL513B	CZ-RL513B	CZ-RL513B
Cooling capacity	Nominal (Min - Max)	kW	5.60 (2 - 6.30)	7.10 (2.10 - 7.70)	10.00 (3.8 - 11.00)	12.50 (3.80 - 13.00)
	Nominal (Min - Max)	kCal/h	4,816 (1,720 - 5,418)	6,106 (1,806 - 6,622)	8,600 (3,268 - 9,460)	10,750 (3,268 - 11,180)
EER [1]	Nominal (Min - Max)		3.01 (3.64 - 2.86) B	3.01 (3.23 - 2.96) B	3.01 (3.04 - 2.78) B	3.01 (3.04 - 2.92) B
Power input Cooling	Nominal (Min - Max)	kW	1.86 (0.55 - 2.20)	2.36 (0.65 - 2.60)	3.32 (1.25 - 3.95)	4.15 (1.25 - 4.45)
Heating capacity	Nominal (Min - Max)	kW	7.00 (2.10 - 7.60)	8.00 (2.20 - 8.30)	11.20 (3.80 - 13.00)	14.00 (3.80 - 15.00)
	Nominal (Min - Max)	kCal/h	6,020 (1,806 - 6,536)	6,880 (1,892 - 7,138)	9,632 (3,268 - 11,180)	12,040 (3,268 - 12,900)
COP [1]	Nominal (Min - Max)		3.41 (4.20 - 2.71) B	3.42 (3.67 - 2.59) B	3.41 (3.45 - 3.17) B	3.41 (3.45 - 3.06) B
Power input Heating	Nominal (Min - Max)	kW	2.05 (0.50 - 2.80)	2.34 (0.60 - 3.20)	3.28 (1.10 - 4.10)	4.15 (1.10 - 4.90)
Annual Energy Consumption [2]		kWh	930	1180	1660	2075
Indoor unit						
Air Volume	Cooling / Heating	m³/h	1,080 / 1,080	1,200 / 1,200	1,620 / 1,620	1,860 / 1,860
Moisture removal volume		l/h	3.6	4.2	6.0	7.9
Sound pressure Level [3]	Cooling (Hi / Lo)	dB(A)	36 / 32	38 / 33	42 / 37	46 / 41
	Heating (Hi / Lo)	dB(A)	36 / 32	38 / 33	42 / 37	46 / 41
Sound power Level	Cooling (Hi)	dB	51	53	57	61
	Heating (Hi)	dB	51	53	57	61
Dimensions	Indoor (H x W x D)	mm	246 x 840 x 840	246 x 840 x 840	288 x 840 x 840	288 x 840 x 840
	Panel (H x W x D)	mm	950 x 950 x 45	950 x 950 x 45	950 x 950 x 45	950 x 950 x 45
Net weight	Indoor	kg	26	26	28.5	28.5
	Panel	kg	4.5	4.5	4.5	4.5
Dust filter			Yes	Yes	Yes	Yes
Antialergic filter	Optional		CZ-SA11P	CZ-SA11P	CZ-SA11P	CZ-SA11P
Outdoor unit						
Power source		V	220 - 240	220 - 240	220 - 240	220 - 240
Connection		mm²	4 x 1.5 to 2.5	4 x 1.5 to 2.5	4 x 1.5 to 2.5	4 x 1.5 to 2.5
Current Cooling	Nominal (Min / Max)	A	8.30	10.60	15.20	19.00
Current Heating	Nominal (Min / Max)	A	9.20	10.50	15.00	18.80
Air Volume	Cooling / Heating	m³/h	3,180	3,480	3720	5,640
Sound pressure Level [3]	Cooling (Hi)	dB(A)	49	50	54	55
	Heating (Hi)	dB(A)	51	52	56	56
Sound power Level	Cooling (Hi)	dB	67	68	71	72
	Heating (Hi)	dB	68	69	73	73
Dimensions	H x W x D	mm	795 x 875+70 [4] x 320	795x 875+70 [4] x 320	795 x 900 x 320	1,170 x 900 x 320
Net weight		kg	1/4" (6.35)	65	66	94
Piping connections	Liquid pipe	inch (mm)	3/8" (9.52)	3/8" (9.52)	3/8" (9.52)	3/8" (9.52)
	Gas pipe	inch (mm)	5/8" (15.88)	5/8" (15.88)	5/8" (15.88)	5/8" (15.88)
Refrigerant Loading	R410A	kg	1,63	2.05	2.8	2.8
Elevation difference (in/out) [5]	Max	m	25	25	30	30
Piping length	Min - Max	m	7.5 - 30	7.5 - 30	7.5 - 50	7.5 - 50
Piping length without refrigerent increase	Max	m	30	30	30	30
Additional gas		g/m	50	50	50	50
Area control accessory			EKRORO wire	EKRORO wire	EKRORO wire	EKRORO wire
Operating range, outdoor [3]	Cooling Min / Max	°c	-5 / 43	-5 / 44	-5 / 45	-5 / 46
	Heating Min / Max	°c	-15 / 24	-15 / 25	-15 / 26	-15 / 27

GLOBAL REMARKS

Rating conditions	Cooling	Heating
Inside air temperature	27°C DB / 19°C WB	20°C DB
Outside air temperature	35°C DB / 24°C WB	7°C DB / 6°C WB

DB : Dry buld; WB : Wet buld

1) EER and COP, Energy Saving Classification, is at 220 - 240V (380 - 415V) only in accordance with EU directive 2002/31/EC.
2) The annual consumption is calculated by multiplying the input power at 220 - 240V (380 - 415V) by an average of 500-hr per year in cooling mode.
3) The sound pressure Level of the units shows the value measured of a position 1 meter in front of the main body and 1,5 from the ground. The sound pressure is measured in accordance with Eurovent 6/C/006-97 specification.
4) Add 70mm for piping port.
5) When installing the outdoor unit at a higher position than the indoor unit.

CZ-RL513B
INCLUDED WITH THE OUTDOOR UNIT

CZ-RD513C

CU-YL24HBE5
CU-YL28HBE5

CU-YL34HBE5

CU-YL43HBE5

KIT-YH24DB4E5 // KIT-YH28DB4E5 // KIT-YH34DB4E5 // KIT-YH43DB4E5

HEALTHY AIR
- CZ-SA11P Alleru-buster antiallergic filter (optional)

ENERGY EFFICIENCY AND ECOLOGY
- Inverter system
- R410A environmentally friendly refrigerant gas

COMFORT
- Cooling with low outdoor temperatures (down to -15 ºC)
- 3 types of air emission (3 opening angles for the pre-programmed grilles)
- Automatic deflectors
- Automatic start after a power cut
- Automatic fan operation mode

EASE OF USE
- Weekly On/Off timer (6 settings per day and 42 per week)
- Infrared remote control
- Optional wired remote control

EASY INSTALLATION AND MAINTENANCE
- Installation using existing pipes (only for YL*HBE5 units)
- Drain pump (up to 750 mm)
- Self-diagnostic function
- Condensation control
- Removable, washable indoor unit panel

SPACE NEEDED FOR INSTALLATION

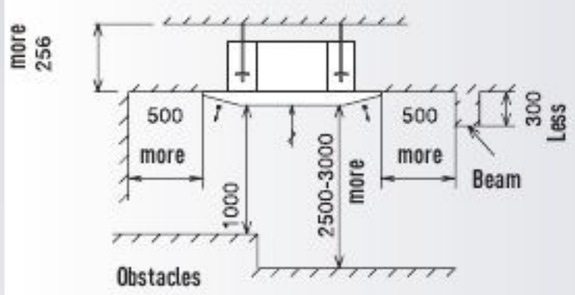

DRAINAGE

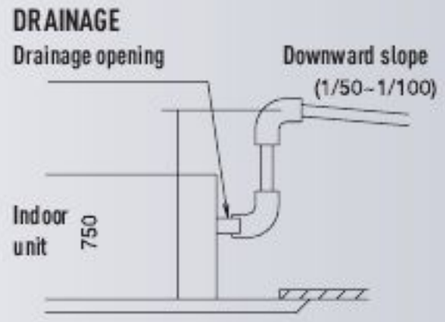

INDOOR UNIT DIMENSIONS // CS-F24DB4E5 // CS-F28DB4E5

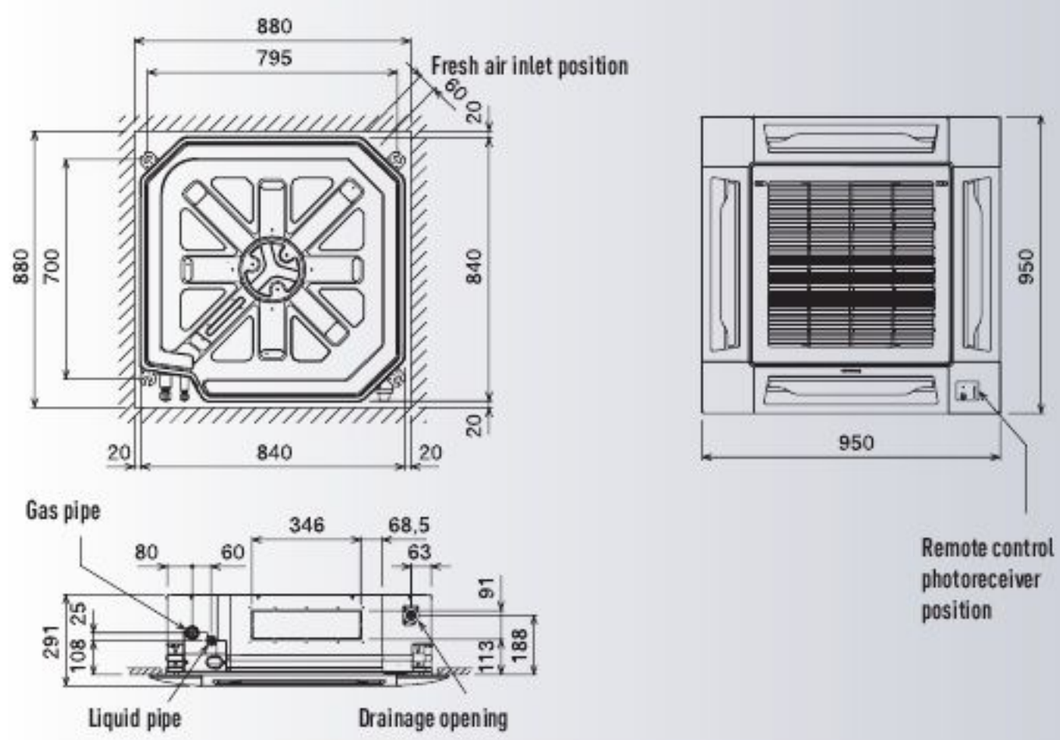

INDOOR UNIT DIMENSIONS // CS-F34DB4E5 // CS-F43DB4E5

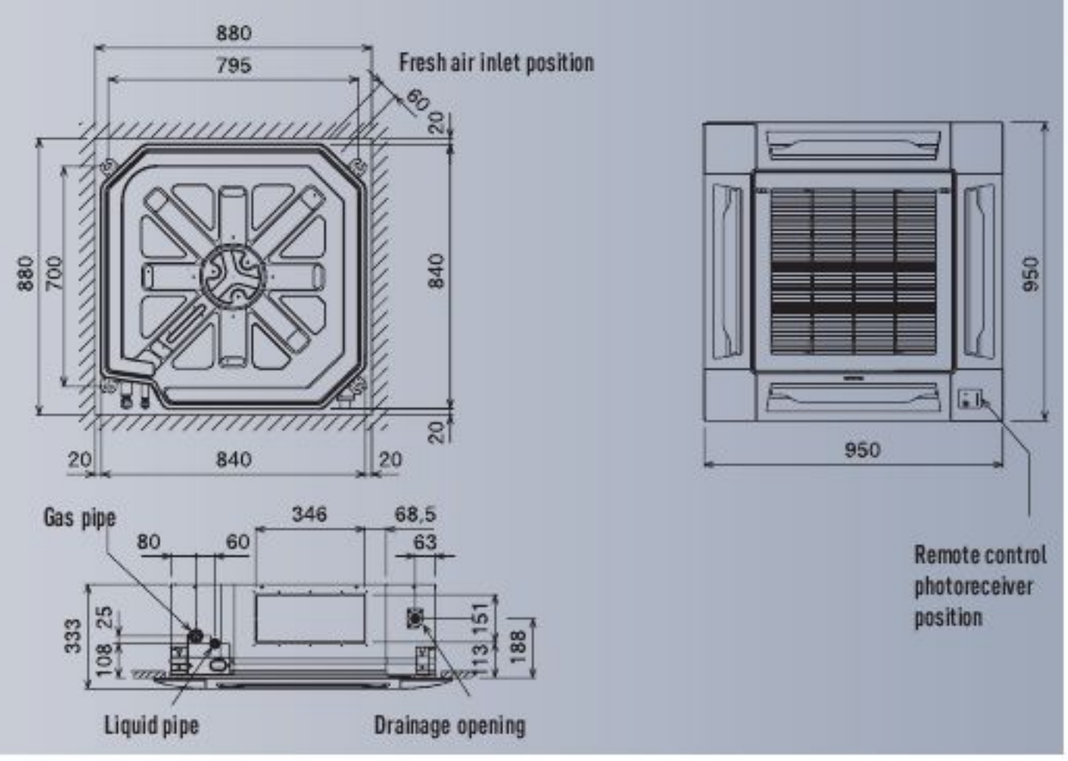

TECHNICAL ZOOM

- ECO MODE FOR 20% ENERGY SAVING
- 3 OPENING ANGLES FOR THE PRE-PROGRAMMED GRILLES
- WEEKLY TIMER, 42 SETTINGS PER WEEK
- 30 M MAXIMUM ELEVATION DIFFERENCE
- EASY CHECK MODE FOR FAILURE DETECTION

4-WAY 90X90 CASSETTE // HEAT PUMP FS TYPE

FULL LINE UP OF HEAT PUMP NO-INVERTER CASSETTE, FROM 1.5 H.P. TO 6.0 H.P., SINGLE-PHASE AND THREE-PHASE

*OPTIONAL

4-WAY 90X90 CASSETTE // HEAT PUMP FS TYPE

			1.5 H,P	2.0 H.P.	2.5 H.P.	3.0 H.P.	3.0 H.P.	4.0 H.P.	4.0 H.P.	5.0 H.P.	6.0 H.P.
KIT			KIT-F14DB4E5-C	KIT-F18DB4E5-C	KIT-F24DB4E5-C	KIT-F28DB4E5-C	KIT-F28DB4E8-C	KIT-F34DB4E5-C	KIT-F34DB4E8-C	KIT-F43DB4E8-C	KIT-F50DB4E8-C
Indoor			CS-F14DB4E5	CS-F18DB4E5	CS-F24DB4E5	CS-F28DB4E5	CS-F28DB4E5	CS-F34DB4E5	CS-F34DB4E5	CS-F43DB4E5	CS-F50DB4E5
Outdoor			CU-B14DBE5	CU-B18DBE5	CU-B24DBE5	CU-B28DBE5	CU-B28DBE8	CU-B34DBE5	CU-B34DBE8	CU-B43DBE8	CU-B50DBE8
Panel			CZ-BT03P	CZ-BT03P	CZ-BT03P	CZ-BT03P	CZ-BT03P	CZ-BT03P	CZ-BT03P	CZ-BT03P	CZ-BT03P
Wireless control	Included on the kit		CZ-RL513B	CZ-RL513B	CZ-RL513B	CZ-RL513B	CZ-RL513B	CZ-RL513B	CZ-RL513B	CZ-RL513B	CZ-RL513B
Wired remote control	Optional		CZ-RD513C	CZ-RD513C	CZ-RD513C	CZ-RD513C	CZ-RD513C	CZ-RD513C	CZ-RD513C	CZ-RD513C	CZ-RD513C
Cooling capacity	Nominal (Min-Max)	kW	3.80	5.00	6.60	7.3	7.3	10	10	12.5	13.5
	Nominal (Min-Max)	kCal/h	3268	4300	5676	6278	6278	8600	8600	10750	11610
EER 1)	Nominal (Min-Max)		3.09 B	2.91 C	2.63 D	2.61 D	2.61 D	2.62 D	2.72 D	2.69 D	2.67 D
Power input Cooling	Nominal (Min-Max)	kW	1.23 (1.2-1.6)	1.72 (1.69-1.75)	2.51(2.46-2.57)	2.80 (2.74-2.85)	2.80 (2.74-2.85)	3.81 (3.76-3.86)	3.68 (3.63-3.73)	4.65 (4.6-4.7)	5.06 (5.01-5.15)
Heating capacity	Nominal (Min-Max)	kW	4.30	5.60	7.1	8.0	8.0	11.2	11.2	14.0	15.0
	Nominal (Min-Max)	kCal/h	3698	4816	6106	6880	6880	9632	9632	12040	12900
COP 1)	Nominal (Min-Max)		3.52 B	3.46 B	3.01 D	3.08 D	3.08 D	2.90 D	2.96 D	3.05 D	3.04 D
Power input Heating	Nominal (Min-Max)	kW	1.22 (1.19-1.25)	1.62 (1.59-1.65)	2.36 (2.31-2.41)	2.60 (2.55-2.65)	2.60 (2.55-2.65)	3.86 (3.81-3.91)	3.78 (3.73-3.83)	4.59 (4.54-4.64)	4.93 (4.88-4.98)
Annual Energy Consumption 2)		kWh	615	860	1255	1400	1400	1905	1840	2325	2530
Indoor unit											
Air Volume	Cooling / Heating	m³/h	900 / 900	960 / 960	1,080 / 1,080	1,200 / 1,200	1,200 / 1,200	1,620 / 1,620	1,620 / 1,620	1,860 / 1,860	1,920 / 1,920
Moisture removal volume		l/h	2.2	2.8	3.8	4.3	4.3	6.0	6.0	7.9	8.6
Sound pressure Level***	Cooling (Hi / Lo)	dB(A)	34 / 31	35 / 32	36 / 32	38 / 33	38 / 33	42 / 37	42 / 37	46 / 41	47 / 42
	Heating (Hi / Lo)	dB(A)	34 / 31	34 / 31	36 / 32	38 / 33	38 / 33	42 / 37	42 / 37	46 / 41	47 / 42
Sound power Level	Cooling (Hi)	dB	49	50	51	53	53	57	57	61	62
	Heating (Hi)	dB	49	49	51	53	53	57	57	61	62
Dimensions	Indoor (H x W x D)	mm	246x840x840	246x840x840	246x840x840	246x840x840	246x840x840	288x840x840	288x840x840	288x840x840	288x840x840
	Panel (H x W x D)	mm	45x950x950	45x950x950	45x950x950	45x950x950	45x950x950	45x950x950	45x950x950	45x950x950	45x950x950
Net weight	Indoor	kg	25	26	26	26	26	28.5	28.5	28.5	28.5
	Panel	kg	4.5	4.5	4.5	4.5	4.5	4.5	4.5	4.5	4.5
Dust filter			Yes	Yes	Yes	Yes	Yes	Yes	Yes	Yes	Yes
Antialergic filter	Optional		CZ-SA11P	CZ-SA11P	CZ-SA11P	CZ-SA11P	CZ-SA11P	CZ-SA11P	CZ-SA11P	CZ-SA11P	CZ-SA11P
Outdoor unit											
Power source		V	220 - 240	220 - 240	220 - 240	220 - 240	380 - 415	220 - 240	380 - 415	380 - 415	380 - 415
Connection		mm²	4 x 1'5 to 2'5	4 x 1'5 to 2'5	4 x 1'5 to 2'5	4 x 1'5 to 2'5	4 x 1'5 to 2'5	4 x 1'5 to 2'5	4 x 1'5 to 2'5	4 x 1'5 to 2'5	4 x 1'5 to 2'5
Current Cooling	Nominal (Min / Max)	A	5.5	7.7	12.4	12.8	4.85	18.1	6.1	7.9	8.5
Current Heating	Nominal (Min / Max)	A	5.45	7.2	11.2	11.8	4.3	17.7	6.0	7.7	8.0
Air Volume	Cooling / Heating	m³/h	3,240	3,420	3,600	3,780	3,780	5,640	5,640	5,640	5,760
Sound pressure Level 3)	Cooling (Hi)	dB(A)	49	49	50	52	52	55	55	56	56
	Heating (Hi)	dB(A)	50	50	51	53	53	56	56	57	57
Sound power Level	Cooling (Hi)	dB	65	65	66	67	67	69	69	70	70
	Heating (Hi)	dB	66	66	67	68	68	70	70	71	71
Dimensions	H x W x D	mm	795x900x320	795x900x320	795x900x320	795x900x320	795x900x320	1,170x900x320	1,170x900x320	1,170x900x320	1,170x900x320
Net weight		kg	55	57	69	69	69	102	100	102	102
Piping connections	Liquid pipe	inch (mm)	1/4" (6.35)	1/4" (6.35)	3/8" (9.52)	3/8" (9.52)	3/8" (9.52)	3/8" (9.52)	3/8" (9.52)	3/8" (9.52)	3/8" (9.52)
	Gas pipe	inch (mm)	1/2" (12.70)	1/2" (12.70)	5/8" (15.88)	5/8" (15.88)	5/8" (15.88)	5/8" (15.88)	5/8" (15.88)	5/8" (15.88)	5/8" (15.88)
Refrigerant Loading	R410A	kg	1.10	1.35	1.70	2.05	2.05	2.70	2.70	3.10	3.40
Elevation difference (in/out) 4)	Max	m	20	20	30	30	30	30	30	30	30
Piping length	Min - Max	m	7.5 - 30	7.5 - 30	7.5 - 50	7.5 - 50	7.5 - 50	7.5 - 50	7.5 - 50	7.5 - 50	7.5 - 50
Piping length without refrigerent increase	Max	m	20	20	30	30	30	30	30	30	30
Additional gas		g/m	50	50	50	50	50	50	50	50	50
Area control accessory			EKRORO wire	EKRORO wire	EKRORO wire	EKRORO wire	EKRORO wire	EKRORO wire	EKRORO wire	EKRORO wire	EKRORO wire
Operating range, outdoor 3)	Cooling Min / Max	°c	5 / 43	5 / 43	5 / 43	5 / 43	5 / 43	5 / 43	5 / 43	5 / 43	5 / 43
	Heating Min / Max	°c	-10 / 24	-10 / 24	-10 / 24	-10 / 24	-10 / 24	-10 / 24	-10 / 24	-10 / 24	-10 / 24

GLOBAL REMARKS

Rating conditions	Cooling	Heating
Inside air temperature	27°C DB / 19°C WB	20°C DB
Outside air temperature	35°C DB / 24°C WB	7°C DB / 6°C WB

DB : Dry buld; WB : Wet buld

1) EER and COP classification is at 220 - 240V in accordance with EU directive 2002/31/EC.
2) The annual consumption is calculated by multiplying the input power at 220 - 240V by an avarage of 500-hr per year in cooling mode.
3) The sound pressure Level of the units shows the value measured of a position 1 meter in front of the main body and 1,5 from the ground. The sound pressure is measured in accordance with Eurovent 6/C/006-97 specification.
4) When installing the outdoor unit at a higher position than the indoor unit.

CZ-RL513B
INCLUDED WITH THE OUTDOOR UNIT

CZ-RD513C

CU-B14DBE5 CU-B28DBE5
CU-B18DBE5 CU-B28DBE8
CU-B24DBE5

CU-B34DBE5 CU-B43DBE8
CU-B34DBE8 CU-B50DBE8

KIT-F14DB4E5-C // KIT-F18DB4E5-C // KIT-F24DB4E5-C // KIT-F28DB4E5-C // KIT-F28DB4E8-C // KIT-F34DB4E5-C // KIT-F34DB4E8-C // KIT-F43DB4E8-C // KIT-F50DB4E8-C

HEALTHY AIR
- CZ-SA11P Alleru-buster antiallergic filter (optional)

ENERGY EFFICIENCY AND ECOLOGY
- R410A environmentally friendly refrigerant gas

COMFORT
- 3 types of air emission (3 opening angles for the pre-programmed grilles)
- Automatic deflectors
- Automatic start after a power cut
- Automatic fan operation mode

EASE OF USE
- Weekly On/Off timer (6 settings per day and 42 per week)
- Infrared remote control
- Optional wired remote control

EASY INSTALLATION AND MAINTENANCE
- Self-diagnostic function
- Drain pump (up to 750 mm)
- Condensation control
- Removable, washable indoor unit panel

SPACE NEEDED FOR INSTALLATION

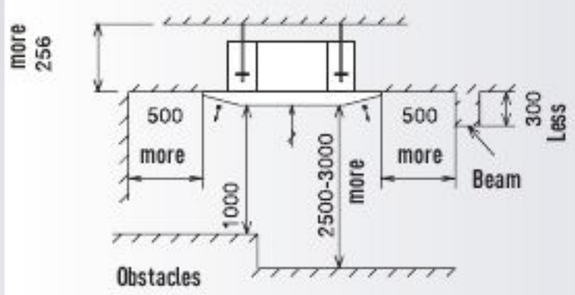

DRAINAGE

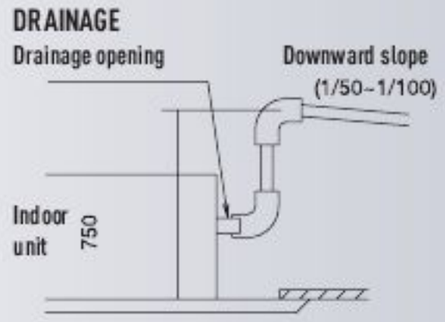

INDOOR UNIT DIMENSIONS // CS-F14DB4E5 // CS-F18DB4E5 // CS-F24DB4E5 // CS-F28DB4E5

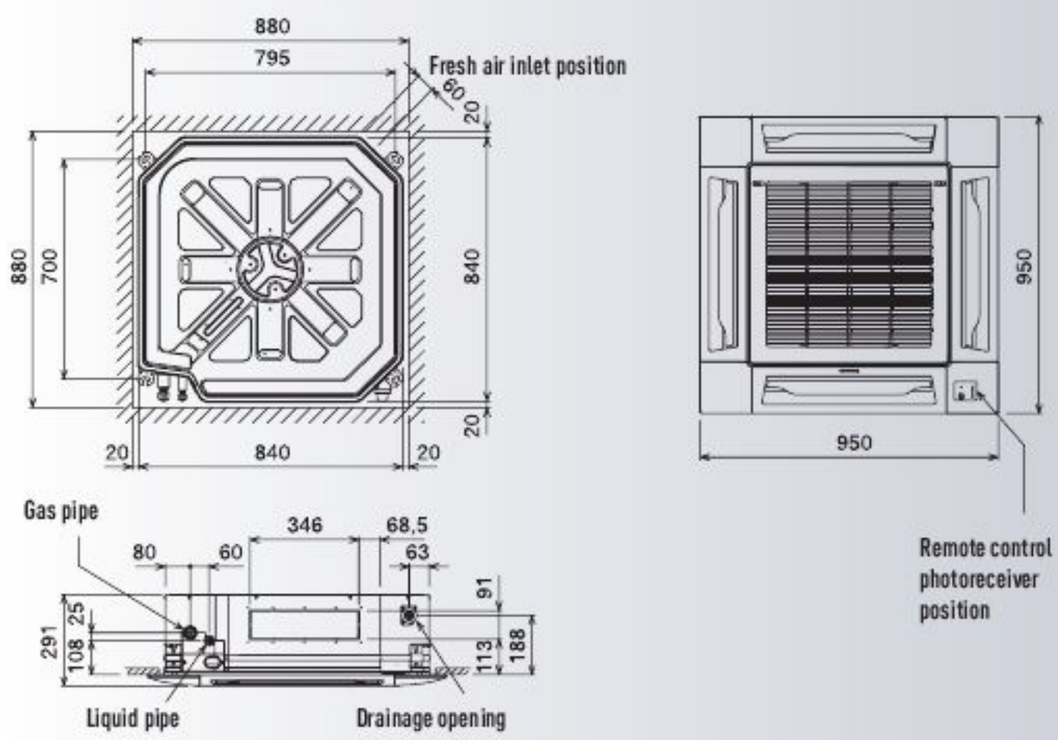

INDOOR UNIT DIMENSIONS // CS-F34DB4E5 // CS-F43DB4E5 // CS-F50DB4E5

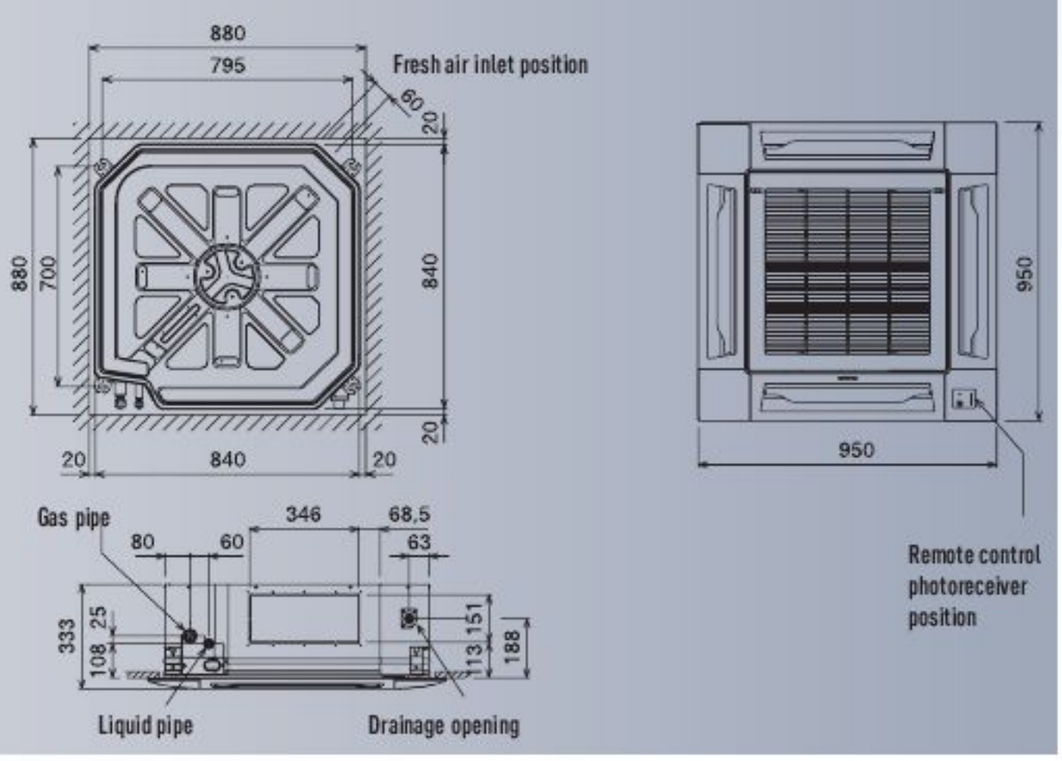

TECHNICAL ZOOM

- HIGHER ENERGY CLASS FOR HIGH SAVINGS, EVEN AT -20°C
- ECO MODE FOR 20% ENERGY SAVING
- WEEKLY TIMER, 42 SETTINGS PER WEEK
- ULTRA COMPACT OUTDOOR UNITS WHICH ARE EASY TO INSTALL
- 30 M MAXIMUM ELEVATION DIFFERENCE
- EASY CHECK MODE FOR FAILURE DETECTION

CEILING // INVERTER + FS TYPE

A COMPLETE LINE UP OF COMPACT, EFFICIENT , QUIETER AND POWERFUL CEILING, FOR THE MOST DEMANDING CUSTOMERS, FROM 2.5 H.P. TO 6.0 H.P., SINGLE-PHASE AND THREE-PHASE

*OPTIONAL

CEILING // INVERTER + FS TYPE

			2.5 H.P.	3.0 H.P.	4.0 H.P.	4.0 H.P.	5.0 H.P.	5.0 H.P.	6.0 H.P.
KIT			KIT-F24DTE5	KIT-F28DTE5	KIT-F34DTE5	KIT-F34DTE8	KIT-F43DTE5	KIT-F43DTE8	KIT-F50DTE8
Indoor			CS-F24DTE5	CS-F28DTE5	CS-F34DTE5	CS-F34DTE5	CS-F43DTE5	CS-F43DTE5	CS-F50DTE5
Outdoor			CU-L24DBE5	CU-L28DBE5	CU-L34DBE5	CU-L34DBE8	CU-L43DBE5	CU-L43DBE8	CU-L50DBE8
Wireless control	Included on the kit		CZ-RL513T	CZ-RL513T	CZ-RL513T	CZ-RL513T	CZ-RL513T	CZ-RL513T	CZ-RL513T
Wired remote control	Optional		CZ-RD513C	CZ-RD513C	CZ-RD513C	CZ-RD513C	CZ-RD513C	CZ-RD513C	CZ-RD513C
Cooling capacity	Nominal (Min-Max)	kW	6.30 (2.00-6.50)	7.10 (2.10-7.50)	10.00 (4.00-12.00)	10.00 (4.00-12.00)	12.50 (4.00-13.50)	12.50 (4.00-13.50)	14.00 (4.00-16.00)
	Nominal (Min-Max)	kCal/h	5,418 (1,720-5,590)	6,106 (1806-6450)	8,600 (3,440-10,320)	8,600 (3,440-10,320)	10,750 (3,440-11,610)	10,750 (3,440-11,610)	12,040 (3,440-13,760)
EER [1]	Nominal (Min-Max)		3.21 (3.64-2.83) A	2.91 (3.23-3.06) C	3.33 (3.20-3.53) A	3.33 (3.20-3.53) A	3.01 (3.08-3.14) C	3.01 (3.08-3.14) C	2.91 (2.96-3.14) C
Power input Cooling	Nominal (Min-Max)	kW	1.96 (0.55-2.30)	2.44 (0.65-2.45)	3.00 (1.25-3.40)	3.00 (1.25-3.40)	4.15 (1.3-4.30)	4.15 (1.3-4.30)	4.81 (1.35-5.10)
Heating capacity	Nominal (Min-Max)	kW	7.10 (2.10-7.50)	8.00 (2.20-8.50)	11.20 (4.00-13.50)	11.20 (4.00-13.50)	14.00 (4.00-15.50)	14.00 (4.00-15.50)	16.0 (4.00-18.00)
	Nominal (Min-Max)	kCal/h	6,106 (1,806-6,450)	6,880 (1,892-7,310)	9,632 (3,440-11,610)	9,632 (3,440-11,610)	12,040 (3,440-13,330)	12,040 (3,440-13,330)	13,760 (3,440-15,480)
COP [1]	Nominal (Min-Max)		3.21 (3.82-2.38) C	3.02 (3.38-2.62) D	3.41 (3.20-3.21) B	3.41 (3.20-3.21) B	3.50 (3.20-3.10) B	3.50 (3.20-3.10) B	3.41 (3.08-3.00) B
Power input Heating	Nominal (Min-Max)	kW	2.21 (0.55-3.15)	2.65 (0.65-3.25)	3.28 (1.25-4.20)	3.28 (1.25-4.20)	4.00 (1.25-5.00)	4.00 (1.25-5.00)	4.69 (1.30-6.00)
Annual Energy Consumption [2]		kWh	980	1,220	1,500	1,500	2,075	2,075	2,405
Indoor unit									
Air Volume	Cooling / Heating	m³/h	1,020 / 1,020	1,080 / 1,080	1,740 / 1,740	1,740 / 1,740	1,860 / 1,860	1,860 / 1,860	1,920 / 1,920
Moisture removal volume		l/h	2.3	2.8	3.8	4.3	6.0	7.9	9.0
Sound pressure Level [3]	Cooling (Hi / Lo)	dB(A)	43 / 39	45 / 41	47 / 43	47 / 43	49 / 45	49 / 45	50 / 46
	Heating (Hi / Lo)	dB(A)	43 / 39	45 / 41	47 / 43	47 / 43	49 / 45	49 / 45	50 / 46
Sound power Level	Cooling (Hi)	dB	60	62	64	64	66	66	67
	Heating (Hi)	dB	60	62	64	64	66	66	67
Dimensions	Indoor (H x W x D)	mm	210 x 1,245 x 700	210 x 1,245 x 700	250 x 1,600 x 700	250 x 1,600 x 700	250 x 1,600 x 700	250 x 1,600 x 700	250 x 1,600 x 700
Net weight	Indoor	kg	33	33	43	43	47	47	47
Dust filter			Yes	Yes	Yes	Yes	Yes	Yes	Yes
Antialergic filter	Optional		CZ-SA11P	CZ-SA11P	CZ-SA11P	CZ-SA11P	CZ-SA11P	CZ-SA11P	CZ-SA11P
Outdoor unit									
Power source		V	220 - 240	220 - 240	220 - 240	380 - 415	220 - 240	380 - 415	380 - 415
Connection		mm²	4 x 1'5 to 2'5	4 x 1'5 to 2'5	4 x 1'5 to 2'5	4 x 1'5 to 2'5	4 x 1'5 to 2'5	4 x 1'5 to 2'5	4 x 1'5 to 2'5
Current Cooling	Nominal (Min / Max)	A	8.9	11.1	13.0	4.7	18.8	6.5	7.4
Current Heating	Nominal (Min / Max)	A	10.0	12.0	14.9	5.2	18.2	6.3	7.2
Air Volume	Cooling / Heating	m³/h	2,880 / 2,880	2,880 / 2,880	5,880 / 5,880	5,880 / 5,880	5,880 / 5880	5,880 / 5,880	5,880 / 5,880
Sound pressure Level [3]	Cooling (Hi)	dB(A)	47	48	52	52	53	53	54
	Heating (Hi)	dB(A)	49	50	54	54	55	55	56
Sound power Level	Cooling (Hi)	dB	63	64	66	66	67	67	68
	Heating (Hi)	dB	65	66	68	68	69	69	70
Dimensions	H x W x D	mm	795 x 900 x 320	795 x 900 x 320	1,340 x 900 x 320	1,340 x 900 x 320	1,340 x 900 x 320	1,340 x 900 x 320	1,340 x 900x 320
Net weight		kg	71	71	110	110	110	110	105
Piping connections	Liquid pipe	inch (mm)	3/8" (9.52)	3/8" (9.52)	3/8" (9.52)	3/8" (9.52)	3/8" (9.52)	3/8" (9.52)	3/8" (9.52)
	Gas pipe	inch (mm)	5/8" (15.88)	5/8" (15.88)	5/8" (15.88)	5/8" (15.88)	5/8" (15.88)	5/8" (15.88)	5/8" (15.88)
Refrigerant Loading	R410A	kg	2.13	2.35	3.3	3.3	3.3	3.3	3.5
Elevation difference (in/out) [4]	Max	m	30	30	30	30	30	30	30
Piping length	Min - Max	m	7.5 - 50	7.5 - 50	7.5 - 50	7.5 - 50	7.5 - 50	7.5 - 50	7.5 - 50
Piping length without refrigerent increase	Max	m	30	30	30	30	30	30	30
Additional gas		g/m	50	50	50	50	50	50	50
Area control accessory			EKRORO wire	EKRORO wire	EKRORO wire	EKRORO wire	EKRORO wire	EKRORO wire	EKRORO wire
Operating range, outdoor [3]	Cooling Min / Max	°c	-5 / 43	-5 / 43	-5 / 43	-5 / 43	-5 / 43	-5 / 43	-5 / 43
	Heating Min / Max	°c	-20 / 24	-20 / 24	-20 / 24	-20 / 24	-20 / 24	-20 / 24	-20 / 24

GLOBAL REMARKS

Rating conditions	Cooling	Heating
Inside air temperature	27°C DB / 19°C WB	20°C DB
Outside air temperature	35°C DB / 24°C WB	7°C DB / 6°C WB

DB : Dry buld; WB : Wet buld

1) EER, Energy Saving Classification, is at 220 - 240V (380 - 415V) only in accordance with EU directive 2002/31/EC.
2) The annual consumption is calculated by multiplying the input power at 220 - 240V (380 - 415V) by an average of 500-hr per year in cooling mode.
3) The sound pressure Level of the units shows the value measured of a position 1 meter in front of the main body and 1,5 from the ground. The sound pressure is measured in accordance with Eurovent 6/C/006-97 specification.
4) When installing the outdoor unit at a higher position than the indoor unit.

CZ-RL513T

CZ-RD513C

CU-L24DBE5
CU-L28DBE5

CU-L34DBE5 CU-L43DBE8
CU-L34DBE8 CU-L50DBE8
CU-L43DBE5

KIT-F24DTE5 // KIT-F28DTE5 // KIT-F34DTE5 // KIT-F34DTE8 // KIT-F43DTE5 // KIT-F43DTE8 // KIT-F50DTE8

HEALTHY AIR
- Anti-Mould long life air filter
- CZ-SA12P Alleru-buster antiallergic filter (optional)

ENERGY EFFICIENCY AND ECOLOGY
- Maximum efficiency Inverter system
- R410A environmentally friendly refrigerant gas

COMFORT
- Cooling with low outdoor temperatures (down to -20 ºC)
- Automatic start after a power cut
- Automatic fan operation mode
- Soft dry operation mode
- Automatic air deflector system
- Hot start mode
- Super wide air outlet (100 degrees horizontally)

EASE OF USE
- Weekly On/Off timer (6 settings per day and 42 per week)
- Infrared remote control
- Wired remote control optional

EASY INSTALLATION AND MAINTENANCE
- Installation using existing pipes
- Self-diagnostic function
- Condensation control

SPACE NEEDED FOR INSTALLATION

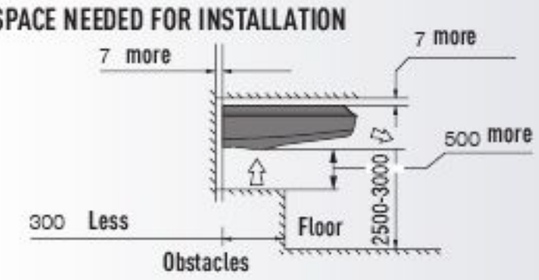

INDOOR UNIT DIMENSIONS CS-F24DTE5 // CS-F28DTE5

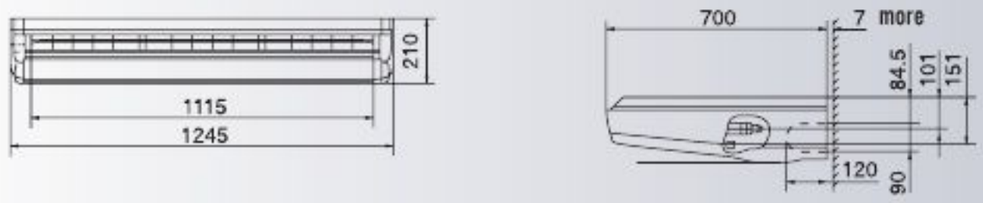

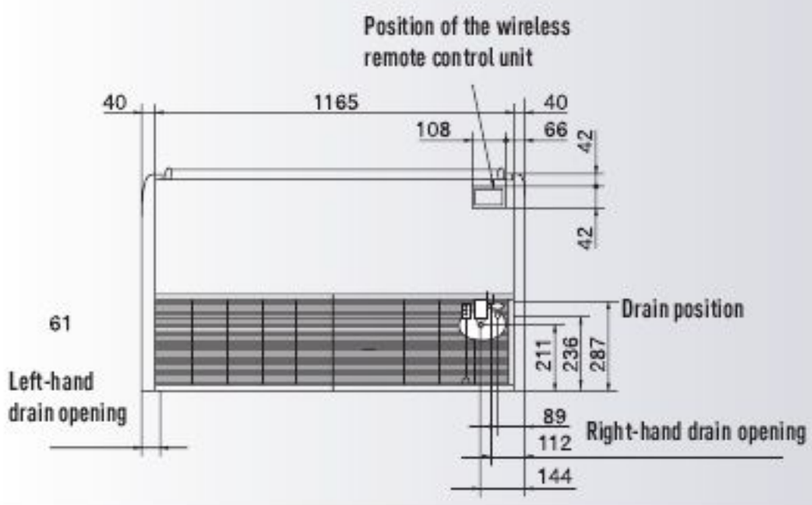

INDOOR UNIT DIMENSIONS CS-F34DTE5 // CS-F43DTE5 // CS-F50DTE5

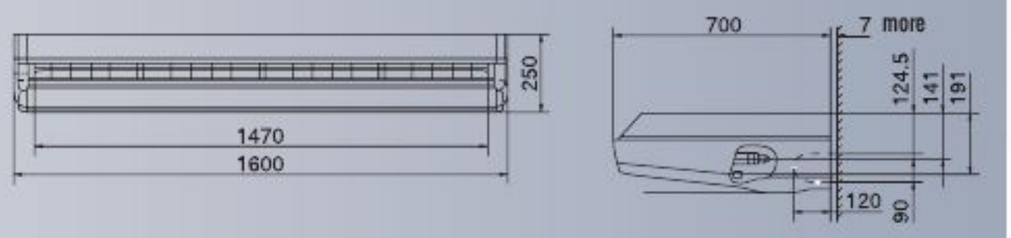

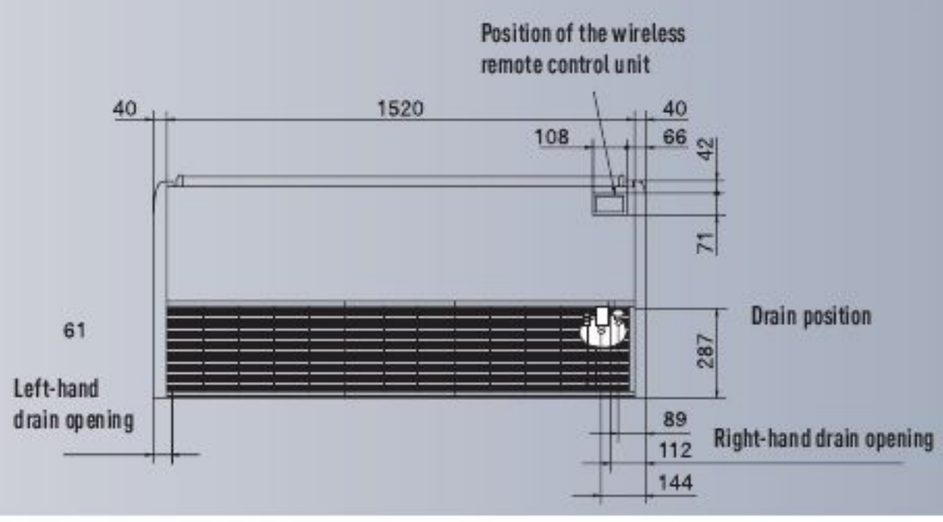

TECHNICAL ZOOM

- ULTRA COMPACT OUTDOOR UNITS (-40% REDUCED SIZE FOR THE CU-YL34HBE5)
- ECO MODE FOR 20% ENERGY SAVING
- WEEKLY TIMER, 42 SETTINGS PER WEEK
- 25 M MAXIMUM ELEVATION DIFFERENCE
- COOLING WITH LOW OUTDOOR TEMPERATURES (DOWN TO -20 ºC)
- EASY CHECK MODE FOR FAILURE DETECTION

CEILING // INVERTER FS TYPE

COMPACT LINE UP OF INVERTER CEILING, FROM 2.5 H.P. TO 5.0 H.P., SINGLE-PHASE

*OPTIONAL

CEILING // INVERTER FS TYPE

			2.5 H.P.	3.0 H.P.	4.0 H.P.	5.0 H.P.
KIT			**KIT-YH24DTE5**	**KIT-YH28DTE5**	**KIT-YH34DTE5**	**KIT-YH43DTE5**
Indoor			**CS-F24DTE5**	**CS-F28DTE5**	**CS-F34DTE5**	**CS-F43DTE5**
Outdoor			**CU-YL24GBE5**	**CU-YL28GBE5**	**CU-YL34GBE5**	**CU-YL43GBE5**
Wireless control	**Included on the kit**		**CZ-RL513T**	**CZ-RL513T**	**CZ-RL513T**	**CZ-RL513T**
Wired remote control	**Optional**		**CZ-RL513B**	**CZ-RL513B**	**CZ-RL513B**	**CZ-RL513B**
Cooling capacity	Nominal (Min - Max)	kW	5.60 (2 - 6.30)	7.10 (2.10 - 7.50)	10.00 (3.8 - 10.50)	12.50 (3.80 - 13.00)
	Nominal (Min - Max)	kCal/h	4,816 (1,720 - 5,418)	6,106 (1,806 - 6,450)	8,600 (3,268 - 9,030)	10,750 (3,268 - 11,180)
EER [1]	Nominal (Min - Max)		2.81 (3.03 - 2.68) C	2.81 (3.00 - 2.78) C	2.61 (2.92 - 2.56) D	3.81 (2.92 - 2.77) C
Power input Cooling	Nominal (Min - Max)	kW	1.99 (0.66 - 2.35)	2.53 (0.70 - 2.70)	3.83 (1.30 - 4.10)	4.45 (1.30 - 4.70)
Heating capacity	Nominal (Min - Max)	kW	7.00 (2.10 - 7.50)	8.00 (2.20 - 8.30)	11.20 (3.80 - 12.50)	14.00 (3.80 - 14.50)
	Nominal (Min - Max)	kCal/h	6,020 (1,806 - 6,450)	6,880 (1,892 - 7,138)	9,632 (3,268 - 10,750)	12,040 (3,268 - 12,470)
COP [1]	Nominal (Min - Max)		2.81 (3.82 - 2.54) D	2.81 (3.38 - 2.55) D	3.21 (3.30 - 2.98) C	3.31 (3.39 - 2.90) C
Power input Heating	Nominal (Min - Max)	kW	2.49 (0.55 - 2.95)	2.855 (0.65 - 3.25)	3.49 (1.15 - 4.20)	4.23 (1.12 - 5.00)
Annual Energy Consumption [2]		kWh	995	1,265	1,915	2,225
Indoor unit						
Air Volume	Cooling / Heating	m³/h	1,020 / 1,020	1,080 / 1,080	1,740 / 1,740	1,860 / 1,860
Moisture removal volume		l/h	3.20	4.20	6.00	7.90
Sound pressure Level [3]	Cooling (Hi / Lo)	dB(A)	43 / 39	45 / 41	47 / 43	49 / 45
	Heating (Hi / Lo)	dB(A)	43 / 39	45 / 41	47 / 43	49 / 45
Sound power Level	Cooling (Hi)	dB	60	62	64	66
	Heating (Hi)	dB	60	62	64	66
Dimensions	Indoor (H x W x D)	mm	210 x 1,245 x 700	210 x 1,245 x 700	210 x 1,600 x 700	210 x 1,600 x 700
Net weight	Indoor	kg	33	33	43	47
Dust filter			Yes	Yes	Yes	Yes
Antialergic filter	Optional		CZ-SA12P	CZ-SA12P	CZ-SA12P	CZ-SA12P
Outdoor unit						
Power source		V	220 - 240	220 - 240	220 - 240	220 - 240
Connection		mm²	4 x 1.5 to 2.5	4 x 1.5 to 2.5	4 x 1.5 to 2.5	4 x 1.5 to 2.5
Current Cooling	Nominal (Min / Max)	A	8.9	11.3	17.5	20.3
Current Heating	Nominal (Min / Max)	A	11.2	12.8	16	19.4
Air Volume	Cooling / Heating	m³/h	3,180	3,480	3,720	5,640
Sound pressure Level [3]	Cooling (Hi)	dB(A)	49	50	53	54
	Heating (Hi)	dB(A)	51	52	56	56
Sound power Level	Cooling (Hi)	dB	60	62	64	66
	Heating (Hi)	dB	60	62	64	66
Dimensions	H x W x D	mm	795 x 875+70 [4] x 320	795 x 875+70 [4] x 320	795 x 900 x 320	1,170 x 900 x 320
Net weight		kg	65	65	66	94
Piping connections	Liquid pipe	inch (mm)	3/8" (9.52)	3/8" (9.52)	3/8" (9.52)	3/8" (9.52)
	Gas pipe	inch (mm)	5/8" (15.88)	5/8" (15.88)	5/8" (15.88)	5/8" (15.88)
Refrigerant Loading	R410A	kg	1.63	2.05	2.8	2.8
Elevation difference (in/out) [5]	Max	m	25	25	30	30
Piping length	Min - Max	m	7.5 - 30	7.5 - 30	7.5 - 50	7.5 - 50
Piping length without refrigerent increase	Max	m	30	30	30	30
Additional gas		g/m	50	50	50	50
Area control accessory			EKRORO wire	EKRORO wire	EKRORO wire	EKRORO wire
Operating range, outdoor [3]	Cooling Min / Max	°c	-5 / 43	-5 / 44	-5 / 45	-5 / 46
	Heating Min / Max	°c	-15 / 24	-15 / 25	-15 / 26	-15 / 27

GLOBAL REMARKS

Rating conditions	Cooling	Heating
Inside air temperature	27°C DB / 19°C WB	20°C DB
Outside air temperature	35°C DB / 24°C WB	7°C DB / 6°C WB

DB : Dry buld; WB : Wet buld

1) EER and COP, Energy Saving Classification, is at 220 - 240V (380 - 415V) only in accordance with EU directive 2002/31/EC.
2) The annual consumption is calculated by multiplying the input power at 220 - 240V (380 - 415V) by an average of 500-hr per year in cooling mode.
3) The sound pressure Level of the units shows the value measured of a position 1 meter in front of the main body and 1,5 from the ground. The sound pressure is measured in accordance with Eurovent 6/C/006-97 specification.
4) Add 70mm for piping port.
5) When installing the outdoor unit at a higher position than the indoor unit.

CZ-RL513T

CZ-RD513C

CU-YL24HBE5
CU-YL28HBE5

CU-YL34HBE5

CU-YL43HBE5

KIT-YH24DTE5 // KIT-YH28DTE5 // KIT-YH34DTE5 // KIT-YH43DTE5

HEALTHY AIR
- Anti-Mould long life air filter
- CZ-SA12P Alleru-buster antiallergic filter (optional)

ENERGY EFFICIENCY AND ECOLOGY
- Inverter system
- R410A environmentally friendly refrigerant gas

COMFORT
- Cooling with low outdoor temperatures (down to -15 ºC)
- Automatic start after a power cut
- Automatic fan operation mode
- Soft dry operation mode
- Automatic air deflector system
- Hot start mode
- Super wide air outlet (100 degrees horizontally)

EASE OF USE
- Weekly On/Off timer (6 settings per day and 42 per week)
- Infrared remote control
- Optional wired remote control

EASY INSTALLATION AND MAINTENANCE
- Installation using existing pipes (only for YL*HBE5 units)
- Self-diagnostic function
- Condensation control

SPACE NEEDED FOR INSTALLATION

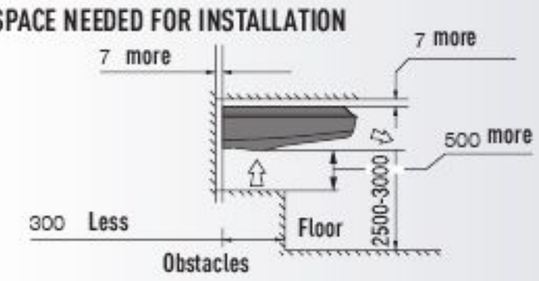

INDOOR UNIT DIMENSIONS CS-F24DTE5 // CS-F28DTE5

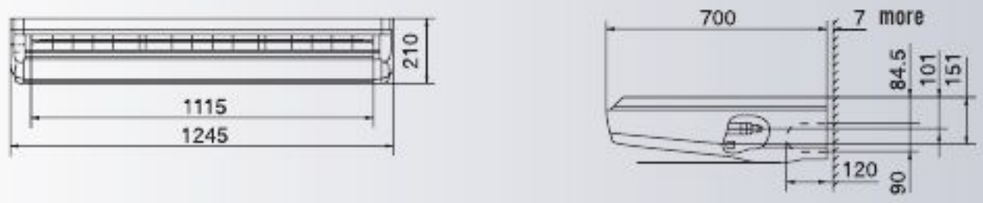

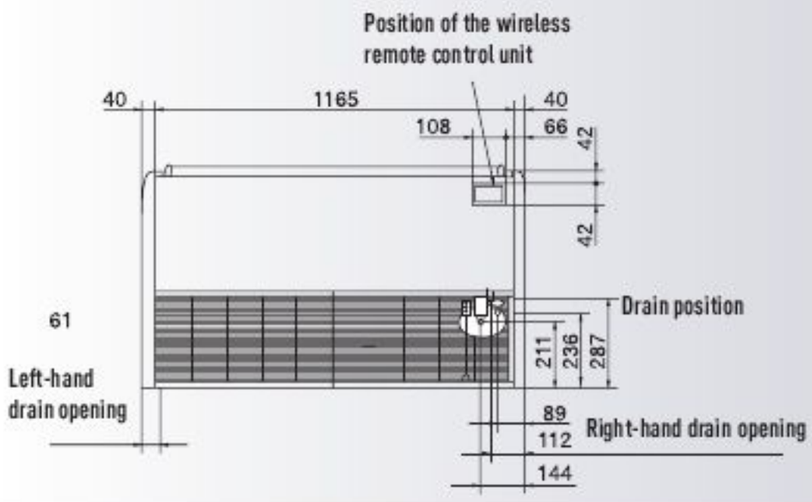

INDOOR UNIT DIMENSIONS CS-F34DTE5 // CS-F43DTE5

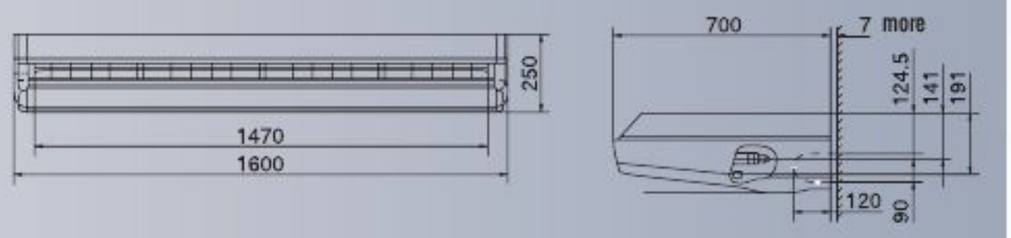

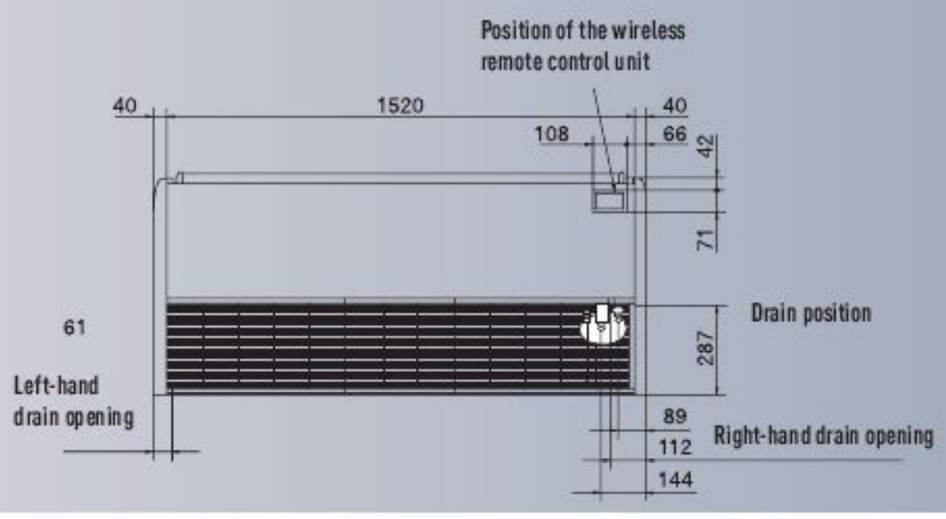

TECHNICAL ZOOM

- ECO MODE FOR 20% ENERGY SAVING
- WEEKLY TIMER, 42 SETTINGS PER WEEK
- 30 M MAXIMUM ELEVATION DIFFERENCE
- EASY CHECK MODE FOR FAILURE DETECTION

CEILING // HEAT PUMP FS TYPE

FULL LINE UP OF HEAT PUMP NO-INVERTER CEILING, FROM 2 H.P. TO 6.0 H.P., SINGLE-PHASE AND THREE-PHASE

allergy prevention air
ALLERV-BUSTER FILTER *OPTIONAL

CEILING // HEAT PUMP FS TYPE

			2.0 H.P.	2.5 H.P.	3.0 H.P.	3.0 H.P.	4.0 H.P.	4.0 H.P.	5.0 H.P.	6.0 H.P.
KIT			KIT-F18DTE5-C	KIT-F24DTE5-C	KIT-F28DTE5-C	KIT-F28DTE8-C	KIT-F34DTE5-C	KIT-F34DTE8-C	KIT-F43DTE8-C	KIT-F50DTE8-C
Indoor			CS-F18DTE5	CS-F24DTE5	CS-F28DTE5	CS-F28DTE5	CS-F34DTE5	CS-F34DTE5	CS-F43DTE5	CS-F50DTE5
Outdoor			CU-B18DBE5	CU-B24DBE5	CU-B28DBE5	CU-B28DBE8	CU-B34DBE5	CU-B34DBE8	CU-B43DBE8	CU-B50DBE8
Wireless control	Included on the kit		CZ-RL513T	CZ-RL513T	CZ-RL513T	CZ-RL513T	CZ-RL513T	CZ-RL513T	CZ-RL513T	CZ-RL513T
Wired remote control	Optional		CZ-RD513C	CZ-RD513C	CZ-RD513C	CZ-RD513C	CZ-RD513C	CZ-RD513C	CZ-RD513C	CZ-RD513C
Cooling capacity	Nominal (Min-Max)	kW	5.00	6.60	7.30	7.30	10.00	10.00	12.50	13.50
	Nominal (Min-Max)	kCal/h	4,300	5,676	6,278	6,278	8,600	8,600	10,750	11,610
EER [1]	Nominal (Min-Max)		2.76 D	2.57 E	2.56 E	2.56 E	2.56 D	2.65 D	2.63 D	2.62 E
Power input Cooling	Nominal (Min-Max)	kW	1.81 (1.75-1.84)	2.57 (2.51-2.63)	2.85 (2.8-2.9)	2.85 (2.8-2.9)	3.66 (3.85-3.95)	3.77 (3.72-3.82)	4.75 (4.7-4.8)	5.16 (5.11-5.28)
Heating capacity	Nominal (Min-Max)	kW	5.60	7.10	7.80	7.80	11.20	11.20	14.00	15.00
	Nominal (Min-Max)	kCal/h	4,816	6,106	6,708	6,708	9,632	9,632	12,040	12,900
COP [1]	Nominal (Min-Max)		3.22 C	2.85 D	2.84 D	2.84 D	2.81 E	2.86 E	2.99 D	2.98 D
Power input Heating	Nominal (Min-Max)	kW	1.74 (1.71-1.77)	2.49 (2.44-2.62)	2.75 (2.7-2.8)	2.75 (2.7-2.8)	3.99 (3.94-4.04)	3.91 (3.86-3.96)	4.69 (4.64-4.74)	5.03 (4.98-5.08)
Annual Energy Consumption [2]		kWh	905	1285	1425	1425	1950	1885	2375	2580
Indoor unit										
Air Volume	Cooling / Heating	m³/h	840 / 840	1,020 / 1,020	1,080 / 1,080	1,080 / 1,080	1,740 / 1,740	1,740 / 1,740	1,860 / 1,860	1,920 / 1,920
Moisture removal volume		l/h	2.8	3.8	4.3	4.3	6.0	6.0	7.9	8.6
Sound pressure Level [3]	Cooling (Hi / Lo)	dB(A)	41 / 37	43 / 39	45 / 41	45 / 41	47 / 43	47 / 43	49 / 45	50 / 46
	Heating (Hi / Lo)	dB(A)	41 / 37	43 / 39	45 / 41	45 / 41	47 / 43	47 / 43	49 / 45	50 / 46
Sound power Level	Cooling (Hi)	dB	58	60	62	62	64	64	66	67
	Heating (Hi)	dB	58	60	62	62	64	64	66	67
Dimensions	Indoor (H x W x D)	mm	210 x 1,245 x 700	210 x 1,245 x 700	210 x 1,245 x 700	210 x 1,245 x 700	250 x 1,600 x 700	250 x 1,600 x 700	250 x 1,600 x 700	250 x 1,600 x 700
Net weight	Indoor	kg	33	33	33	33	43	43	47	47
Dust filter			Yes	Yes	Yes	Yes	Yes	Yes	Yes	Yes
Antialergic filter	Optional		CZ-SA11P	CZ-SA11P	CZ-SA11P	CZ-SA11P	CZ-SA11P	CZ-SA11P	CZ-SA11P	CZ-SA11P
Outdoor unit										
Power source		V	220 - 240	220 - 240	220 - 240	380 - 415	220 - 240	380 - 415	380 - 415	380 - 415
Connection		mm²	4 x 1'5 to 2'5	4 x 1'5 to 2'5	4 x 1'5 to 2'5	4 x 1'5 to 2'5	4 x 1'5 to 2'5	4 x 1'5 to 2'5	4 x 1'5 to 2'5	4 x 1'5 to 2'5
Current Cooling	Nominal (Min / Max)	A	8.1	12.6	12.9	4.9	18.2	6.1	8.0	8.6
Current Heating	Nominal (Min / Max)	A	7.75	12.6	13.0	4.7	18.2	6.4	7.8	8.0
Air Volume	Cooling / Heating	m³/h	3,420	3,600	3,780	3,780	5,640	5,640	5,640	5,760
Sound pressure Level [3]	Cooling (Hi)	dB(A)	49	50	52	52	55	55	56	56
	Heating (Hi)	dB(A)	50	51	53	53	56	56	57	57
Sound power Level	Cooling (Hi)	dB	65	66	67	67	69	69	70	70
	Heating (Hi)	dB	66	67	68	68	70	70	71	71
Dimensions	H x W x D	mm	795 x 900 x 320	795 x 900 x 320	795 x 900 x 320	795 x 900 x 320	1,170 x 900 x 320	1,170 x 900 x 320	1,170 x 900 x 320	1,170 x 900 x 320
Net weight		kg	57	69	69	69	102	100	102	102
Piping connections	Liquid pipe	inch (mm)	1/4" (6.35)	3/8" (9.52)	3/8" (9.52)	3/8" (9.52)	3/8" (9.52)	3/8" (9.52)	3/8" (9.52)	3/8" (9.52)
	Gas pipe	inch (mm)	1/2" (12.70)	5/8" (15.88)	5/8" (15.88)	5/8" (15.88)	5/8" (15.88)	5/8" (15.88)	5/8" (15.88)	5/8" (15.88)
Refrigerant Loading	R410A	kg	1.35	1.7	2.05	2.05	2.7	2.7	3.1	3.4
Elevation difference (in/out) [4]	Max	m	20	30	30	30	30	30	30	30
Piping length	Min - Max	m	7.5 - 30	7.5 - 50	7.5 - 50	7.5 - 50	7.5 - 50	7.5 - 50	7.5 - 50	7.5 - 50
Piping length without refrigerent increase	Max	m	20	30	30	30	30	30	30	30
Additional gas		g/m	20	50	50	50	50	50	50	50
Area control accessory			EKRORO wire	EKRORO wire	EKRORO wire	EKRORO wire	EKRORO wire	EKRORO wire	EKRORO wire	EKRORO wire
Operating range, outdoor [3]	Cooling Min / Max	°c	5 / 43	5 / 43	5 / 43	5 / 43	5 / 43	5 / 43	5 / 43	5 / 43
	Heating Min / Max	°c	-10 / 24	-10 / 24	-10 / 24	-10 / 24	-10 / 24	-10 / 24	-10 / 24	-10 / 24

GLOBAL REMARKS

Rating conditions	Cooling	Heating
Inside air temperature	27°C DB / 19°C WB	20°C DB
Outside air temperature	35°C DB / 24°C WB	7°C DB / 6°C WB

DB : Dry buld; WB : Wet buld

1) EER and COP, Energy Saving Classification, is at 220 - 240V (380 - 415V) in accordance with EU directive 2002/31/EC.
2) The annual consumption is calculated by multiplying the input power at 220 - 240V (380 - 415V) by an average of 500-hr per year in cooling mode.
3) The sound pressure Level of the units shows the value measured of a position 1 meter in front of the main body and 1,5 from the ground. The sound pressure is measured in accordance with Eurovent 6/C/006-97 specification.
4) When installing the outdoor unit at a higher position than the indoor unit.

CZ-RL513T

CZ-RD513C

CU-B18DBE5 CU-B28DBE5
CU-B24DBE5 CU-B28DBE8

CU-B34DBE5 CU-B43DBE8
CU-B34DBE8 CU-B50DBE8

KIT-F18DTE5-C // KIT-F24DTE5-C // KIT-F28DTE5-C // KIT-F28DTE8-C // KIT-F34DTE5-C // KIT-F34DTE8-C // KIT-F43DTE8-C // KIT-F50DTE8-C

HEALTHY AIR
- Anti-Mould long life air filter
- CZ-SA12P Alleru-buster antiallergic filter (optional)

ENERGY EFFICIENCY AND ECOLOGY
- R410A environmentally friendly refrigerant gas

COMFORT
- Automatic start after a power cut
- Automatic fan operation mode
- Soft dry operation mode
- Automatic air deflector system
- Hot start mode
- Super wide air outlet (100 degrees horizontally)

EASE OF USE
- Weekly On/Off timer (6 settings per day and 42 per week)
- Infrared remote control
- Optional wired remote control

EASY INSTALLATION AND MAINTENANCE
- Self-diagnostic function
- Condensation control

SPACE NEEDED FOR INSTALLATION

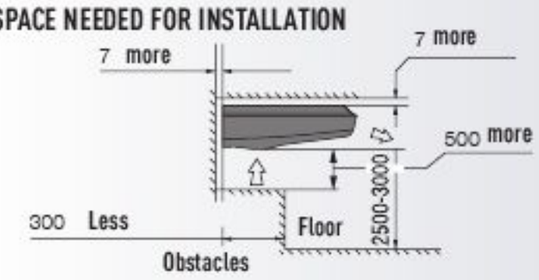

INDOOR UNIT DIMENSIONS CS-F18DTE5 // CS-F24DTE5 // CS-F28DTE5

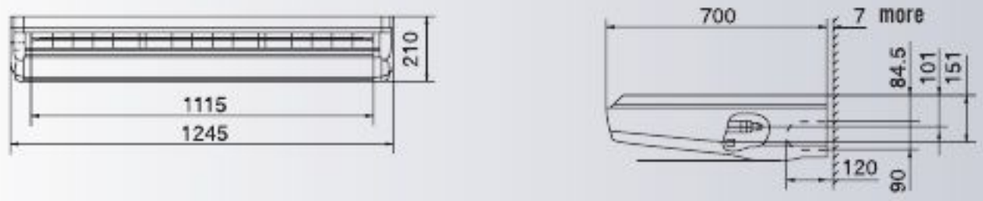

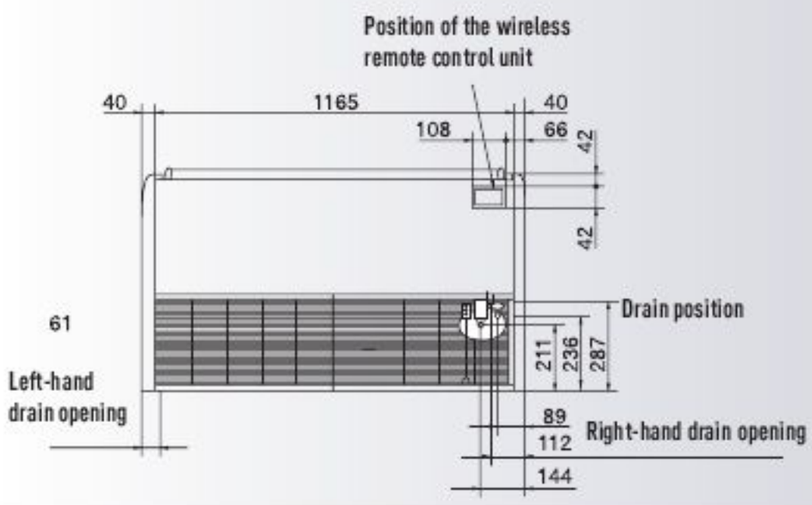

INDOOR UNIT DIMENSIONS CS-F34DTE5 // CS-F43DTE5 // CS-F50DTE5

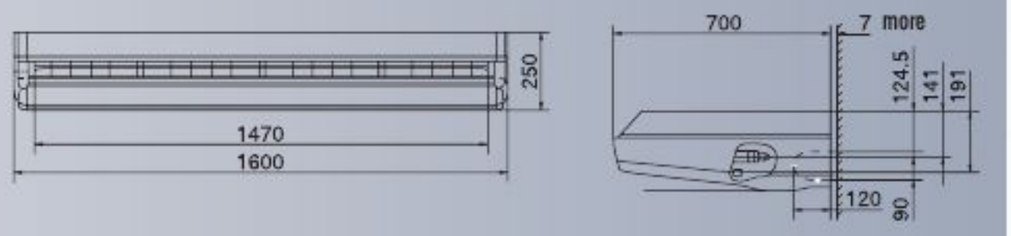

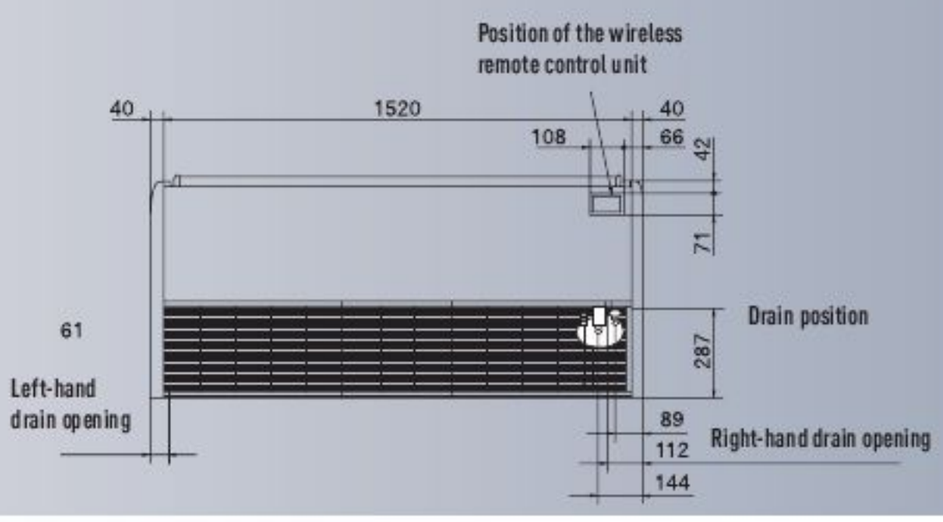

TECHNICAL ZOOM

- SELECTABLE STATIC PRESSURE UP TO 25 MMAQ
- HEATING WITH LOW OUTDOOR TEMPERATURES (DOWN TO -15 ºC)
- WEEKLY TIMER, 42 SETTINGS PER WEEK
- EASY CHECK MODE FOR FAILURE DETECTION

HIGH STATIC PRESSURE HIDE AWAY 8-10 H.P. // INVERTER US TYPE

INVERTER HIGH STATIC PRESSURE HIDE AWAY, 8 - 10 H.P., THREE-PHASE

HIGH STATIC PRESSURE HIDE AWAY 8-10 H,P, // INVERTER US TYPE

			8.0 H,P,	10.0 H,P,
KIT			**KIT-200X2XPQ**	**KIT-250X2XPQ**
Indoor			**S-200E1DPQ1**	**S-250E1DPQ1**
Outdoor			**U-200X2XPQ**	**U-250X2XPQ**
Wired remote control			**CZ-02RT11P**	**CZ-02RT11P**
Cooling capacity	Nominal (Min - Max)	kW	20.00 (10.00 - 22.00)	25.0 (12.5 - 27.5)
	Nominal (Min - Max)	kCal/h	17,200 (17,200 - 18,920)	21,500 (10,750-23,650)
EER [1]	Nominal (Min - Max)		3.21 (3.11 - 3.10) A	2,81 (2.98 - 2.99) C
Power input Cooling	Nominal (Min - Max)	kW	6.23 (3.22 - 7.09)	8.58 (4.20 - 9.20)
Heating capacity	Nominal (Min - Max)	kW	23.0 (11.5 - 25.3)	27.0 (13.0 - 29.7)
	Nominal (Min - Max)	kCal/h	19,780 (9,890 - 21,758)	23,220 (11,180 - 25,540)
COP [1]	Nominal (Min - Max)		3.41 (3.04 - 3.05) B	3.28 (3.02 - 3.03) C
Power input Heating	Nominal (Min - Max)	kW	6.74 (3.78 - 8.3)	8.22 (4.30 - 9.80)
Annual Energy Consumption [2]		kWh	3115	4290
Indoor unit				
Power source		V	220 - 240	220 - 240
External static pressure [3]	High	mmAq	25	25
	Medium	mmAq		
	Low	mmAq		
Air Volume	High	m^3/h	4,200	5,340
	Medium	m^3/h		
	Low	m^3/h		
Moisture removal volume		l/h		
Sound pressure Level [4]	Cooling (Hi / Lo)	dB(A)	45	45
	Heating (Hi / Lo)	dB(A)	45	45
Sound power Level	Cooling (Hi)	dB		
	Heating (Hi)	dB		
Dimensions	H x W x D	mm	450 x 1,400 x 900	450 x 1,400 x 900
Net weight	Indoor	kg	87	92
Dust filter			Yes	Yes
Outdoor unit				
Power source		V	380 - 415	380 - 415
Connection		mm^2	4 x 1'5 to 2'5	4 x 1'5 to 2'5
Current Cooling	Nominal (Min / Max)	A	20	24.1
Current Heating	Nominal (Min / Max)	A	23	16.4
Air Volume	Cooling / Heating	m^3/h	10,500	10,500
Sound pressure Level [4]	Cooling (Hi)	dB(A)	57	57
	Heating (Hi)	dB(A)	57	57
Sound power Level	Cooling (Hi)	dB		
	Heating (Hi)	dB		
Dimensions	H x W x D	mm	1,680 x 930 x 765	1,680 x 930 x 765
Net weight		kg	198	198
Piping connections	Liquid pipe	inch (mm)	3/8	1/2
	Gas pipe	inch (mm)	7/8	7/8
Refrigerant Loading	R410A	kg	8	9
Elevation difference (in/out) [5]	Max	m	30	30
Piping length	Min - Max	m	5 - 100	5 - 100
Piping length without refrigerent increase	Max	m	30	30
Additional gas		g/m	see installation manual	see installation manual
Area control accessory			EKRORO wire	EKRORO wire
Operating range, outdoor [3]	Cooling Min / Max	°c	-5 / 46	-5 / 46
	Heating Min / Max	°c	-15 / 15	-15 / 15

GLOBAL REMARKS	Rating conditions	Cooling
	Inside air temperature	27°C DB / 19°C WB
	Outside air temperature	35°C DB / 24°C WB

DB : Dry buld; WB : Wet buld

1) EER and COP, Energy Saving Classification, is at 220 - 240V (380 - 415V) only in accordance with EU directive 2002/31/EC.
2) The annual consumption is calculated by multiplying the input power at 220 - 240V (380 - 415V) by an average of 500-hr per year in cooling mode.
3) The specification listed on the table indicates values under the condition of 50Pa (5,1 mmAq) which are applied for factory default setting.
4) The sound pressure Level of the units shows the value measured of a position 1 meter in front of the main body and 1,5 from the ground. The sound pressure is measured in accordance with Eurovent 6/C/006-97 specification.
5) When installing the outdoor unit at a higher position than the indoor unit.

CZ-02RT11P

U-200X2XPQ
U-250X2XPQ

KIT-200X2XPQ // KIT-250X2XPQ

ENERGY EFFICIENCY AND ECOLOGY
- Maximum efficiency Inverter system
- R410A environmentally friendly refrigerant gas

COMFORT
- Cooling with low outdoor temperatures (down to -15 ºC)
- Automatic start after a power cut
- Automatic fan operation mode
- Soft dry operation mode
- Hot start mode
- Selection of temperature sensor at indoor unit or wired remote control
- Outdoor air inlet
- Filter included

EASE OF USE
- Weekly On/Off timer (6 settings per day and 42 per week)
- Wired remote control

EASY INSTALLATION AND MAINTENANCE
- High static pressure units ideal for shops and offices
- Selectable static pressure up to 25 mmAq
- Self-diagnostic function

INDOOR UNIT DIMENSIONS

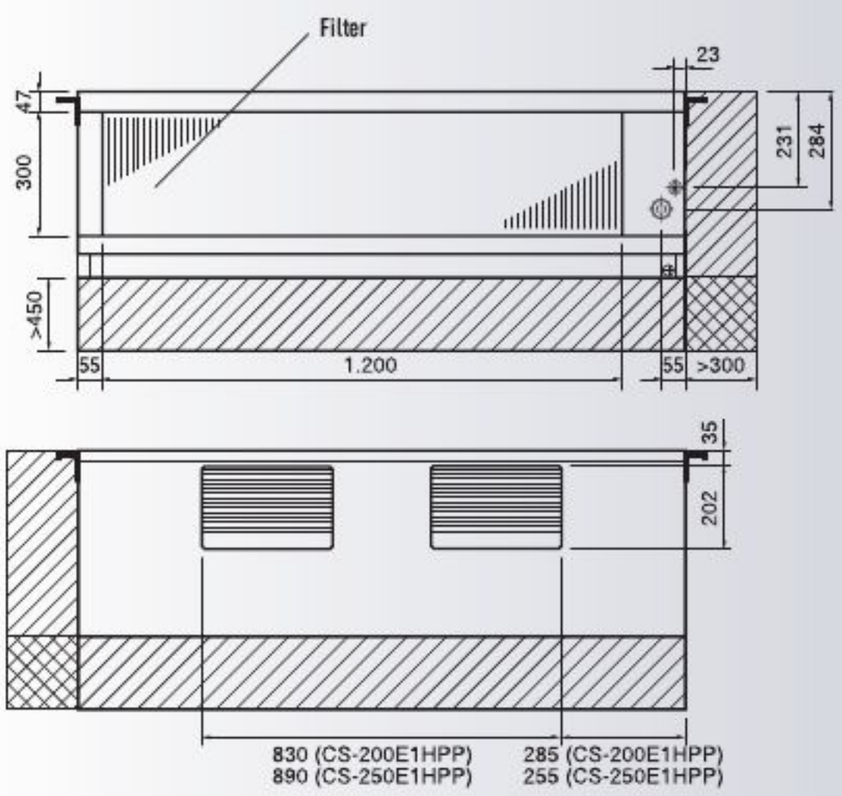

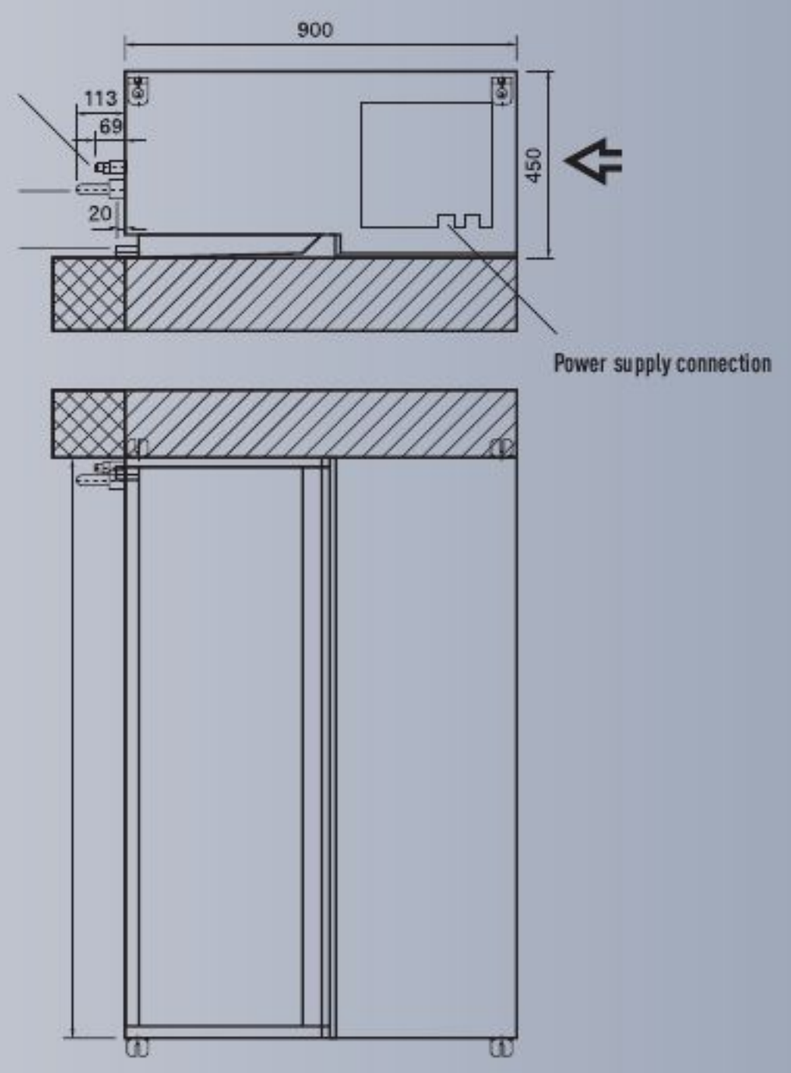

Service space

Additional service space for another drain pump

1. Liquid pipe connection:
   CS-200E1: Single 1/2'' or 12.7 mm connection
   CS-250E1: Single 5/8'' or 15.9 mm connection
2. Gas pipe connection:
   CS-200 | 250E1: 1 1/8'' (28.6 mm) ≤ outside diameter
3. Drainage connector with outside diameter of Ø 25

TWIN FLEXI SYSTEM FS // INVERTER + // INVERTER // HEAT PUMP // COOLING ONLY FS

PANASONIC'S FS UNITS CAN BE INSTALLED AS TWIN SYSTEMS (TWO INDOOR UNITS OF THE SAME TYPE WITH ONE OUTDOOR UNIT). THE INDOOR UNITS CAN BE COMBINED IN ANY OF THE DIFFERENT AVAILABLE RATINGS (1.5 H.P., 2 H.P., 2.5 H.P. AND 3 H.P.).
THE TOTAL POWER OF INDOOR UNITS WILL COINCIDE WITH THE POWER OF THE OUTDOOR UNIT IN ALL CASES SO THAT THEIR OPERATION WILL ALWAYS BE SIMULTANEOUS*. THE OUTDOOR UNITS ARE AVAILABLE IN RATINGS OF 3 H.P., 4 H.P., 5 H.P. AND 6 H.P..

*** Simultaneous operation of indoor units in all cases.**

TABLE OF TWIN COMBINATIONS

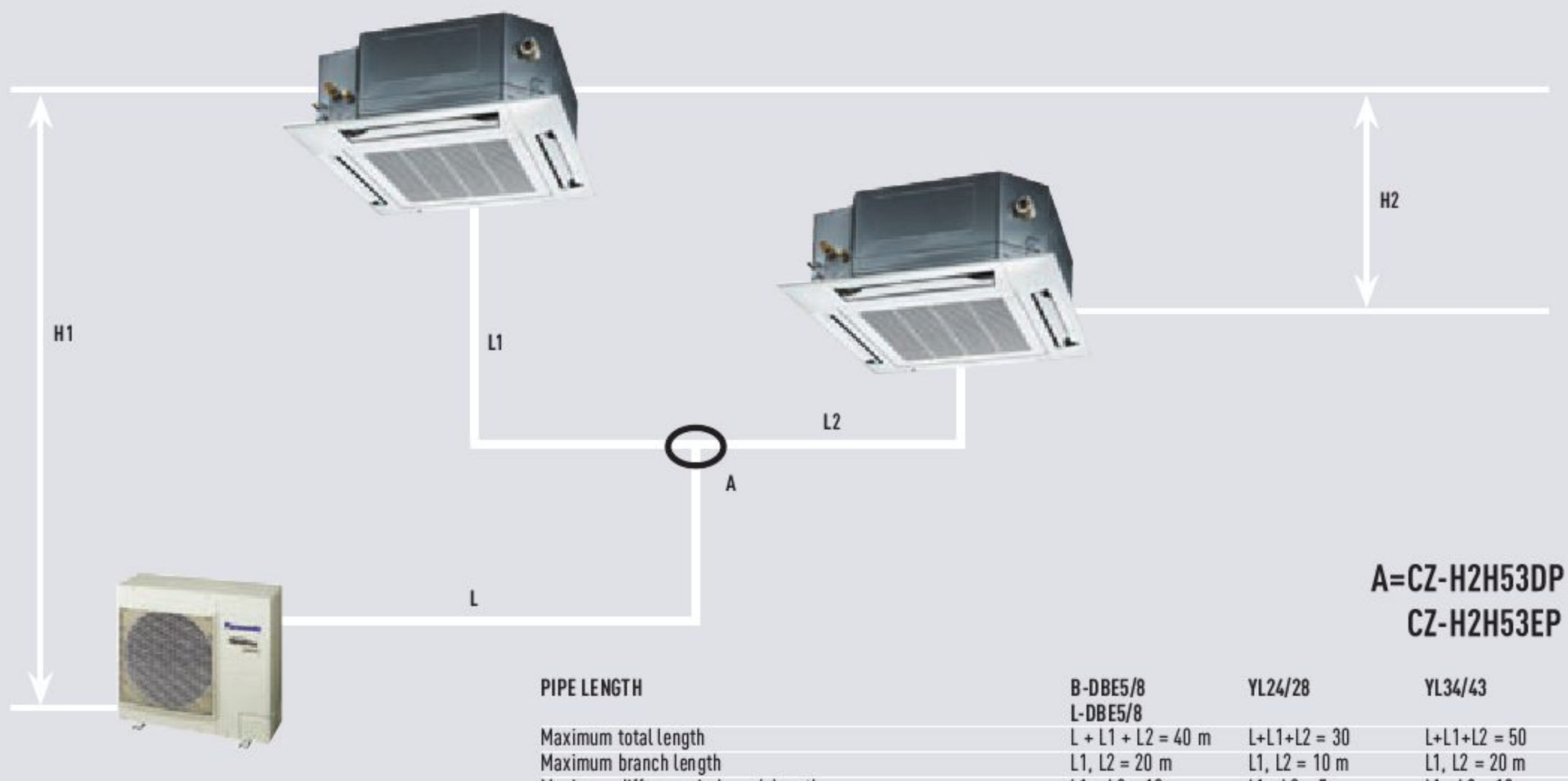

A=CZ-H2H53DP
CZ-H2H53EP

PIPE LENGTH	B-DBE5/8 L-DBE5/8	YL24/28	YL34/43
Maximum total length	L + L1 + L2 = 40 m	L+L1+L2 = 30	L+L1+L2 = 50
Maximum branch length	L1, L2 = 20 m	L1, L2 = 10 m	L1, L2 = 20 m
Maximum difference in branch lengths	L1 – L2 = 10 m	L1 - L2 = 5 m	L1 - L2 = 10 m
Maximum gradient between the outdoor unit and the indoor unit	H1 = 30 m (20 m*)	H1 = 25 m (20 m)	H1 = 30 m (20 m)
Maximum gradient between indoor units	H2 = 0.5 m	H2 = 0.5 m	H2 = 0.5 m

* If the outdoor unit is below the indoor units.

TABLE OF COMBINATIONS FOR FS HEAT PUMP // FS INVERTER +

OUTDOOR UNIT	STANDARD TWIN		DIVERTER	OUTDOOR UNIT	STANDARD TWIN		DIVERTER
3.0 H.P. (CU-28)	3.0 H.P. (CU-28)	1.5 H.P. (CS-14) 1.5 H.P. (CS-14)	CZ-H2H53DP	**5.0 H.P. (CU-43)**	5.0 H.P. (CU-43)	2.5 H.P. (CS-24) 2.5 H.P. (CS-24)	CZ-H2H53EP
4.0 H.P. (CU-34)	4.0 H.P. (CU-34)	2.0 H.P. (CS-18) 2.0 H.P. (CS-18)	CZ-H2H53DP	**6.0 H.P. (CU-50)**	6.0 H.P. (CU-50)	3.0 H.P. (CS-28) 3.0 H.P. (CS-28)	CZ-H2H53EP

COMPATIBLE INDOOR UNITS

CS-F14DB4E5 / CS-F18DB4E5
CS-F24DB4E5 / CS-F28DB4E5

CS-F18DTE5 / CS-F24DTE5 / CS-F28DTE5

CS-F14DD3E5 / CS-F18DD3E5
CS-F24DD3E5 / CS-F28DD3E5

CS-F24DD2E5 / CS-F28DD2E5

COMPATIBLE OUTDOOR UNITS

CU-B28DBE5/8

CU-L28DBE5

CU-YL28HBE5
CU-YL34HBE5

CU-B34DBE5/8
CU-B43DBE8
CU-B50DBE8

CU-L34DBE5/8
CU-L43DBE5/8
CU-L50DBE8

CU-YL43HBE5

COMPATIBLE INDOOR UNITS

			(14) 1,5 H.P.	(18) 2,0 H.P.	(24) 2,5 H.P.	(28) 3,0 H.P.
SPLIT CASSETTE TYPE			**CS-F14DB4E5**	**CS-F18DB4E5**	**CS-F24DB4E5**	**CS-F28DB4E5**
Panel			CZ-BT03P	CZ-BT03P	CZ-BT03P	CZ-BT03P
Power input	Cooling	kW - kcal/h	3.8 - 3,268	5.0 - 4,300	6.6 - 5,676	7.3 - 6,278
	Heating	kW - kcal/h	4.3 - 3,698	5.6 - 4,816	7.1 - 6,106	8.0 - 6,880
Dimensions	Indoor	H x W x D (mm)	246 x 840 x 840	246 x 840 x 840	246 x 840 x 840	246 x 840 x 840
	Panel	H x W x D (mm)	30 x 950 x 950	30 x 950 x 950	30 x 950 x 950	30 x 950 x 950
Sound pressure Level		dB(A)	31	32	32	36
Air Volume		m^3/h	900	960	1,080	1,200
SPLIT CEILING TYPE			—	**CS-F18DTE5**	**CS-F24DTE5**	**CS-F28DTE5**
Power input	Cooling	kW - kcal/h	—	5.0 - 4,300	6.6 - 5,676	7.3 - 6,278
	Heating	kW - kcal/h	—	5.6 - 4,816	7.1 - 6,106	7.8 - 6,708
Dimensions	H x W x D	mm	—	210 x 1,245 x 700	210 x 1,245 x 700	210 x 1,245 x 700
Sound pressure Level		dB(A)	—	34	39	41
Air Volume		m^3/h	—	840	1,020	1,080
LOW STATIC PRESSURE HIDE-AWAY TYPE			**CS-F14DD3E5**	**CS-F18DD3E5**	**CS-F24DD3E5**	**CS-F28DD3E5**
Power input	Cooling	kW - kcal/h	3.8 - 3,268	5.0 - 4,300	6.6 - 5,676	7.3 - 6,278
	Heating	kW - kcal/h	4.3 - 3,698	5.6 - 4,816	7.1 - 6,106	8.0 - 6,880
Dimensions	H x W x D	mm	270 x 780+100 x 650	270 x 780+100 x 650	270 x 1,000+100 x 650	270 x 1,000+100 x 650
Sound pressure Level		dB(A)	35	38	43	43
Air Volume		m^3/h	900	1,020	1320	1,320
HIGH PRESSURE HIDE-AWAY TYPE			—	—	**CS-F24DD2E5**	**CS-F28DD2E5**
Power input	Cooling	kW - kcal/h	—	—	6.6 - 5,676	7.10 - 6,106
	Heating	kW - kcal/h	—	—	7.1 - 6,106	8.00 - 6,880
Dimensions	H x W x D	mm	—	—	290 x 1,000+100 x 500	290 x 1,000+100 x 500
Sound pressure Level		dB(A)	—	—	41	44
Air Volume		m^3/h	—	—	1,320	1,320

OUTDOOR UNITS

INVERTER + FS			**CU-L28DBE5 [I]**	**CU-L34DBE5 [I]**	**CU-L43DBE5 [I]**	**CU-L50DBE5 [■]**
Power input		kW - kcal/h	7,10 - 6.106	10,00 - 8.600	12,50 - 10.750	14,00 - 12.040
Dimensions	H x W x D	mm	795 x 900 x 320	1.340 x 900 x 320	1.340 x 900 x 320	1.340 x 900 x 320
Sound pressure Level		dB(A)	48	52	53	54
Power source		V	220	220	220	380
INVERTER FS			**CU-YL28HBE5 [I]**	**CU-YL34HBE5 [I]**	**CU-YL43HBE5 [I]**	
Power input		kW - kcal/h	7,10 - 6.106	10,00 - 8.600	12,50 - 10.750	
Dimensions		mm	795 x 875 x 320	795 x 900 x 320	1.170 x 900 x 320	
Sound pressure Level		dB(A)	50	54	55	
Power source		V	220	220	220	
HEAT PUMP FS			**CU-B28DBE5 [I] / CU-B28DBE8 [■]**	**CU-B34DBE5 [I] / CU-B34DBE8 [■]**	**CU-B43DBE8 [■]**	**CU-B50DBE8 [■]**
Power input		kW - kcal/h	7,3 - 6.275	10,45 - 9.000	13,0 - 11.200	14,5 - 12.100
Dimensions	H x W x D	mm	795 x 900 x 320	1.170 x 900 x 320	1.170 x 900 x 320	1.170 x 900 x 320
Sound pressure Level		dB(A)	52	55	56	56
Power source		V	220 - 240 [I] / 380 [III]	220 - 240 [I] / 380 [III]	380 [III]	380 [III]

[I] Single-phase [III] Three-phase

DOMESTIC AIR CONDITIONER RANGE

INDOOR UNITS	2.0 kW	2.5 kW	3.5 kW	4.5 kW	5.0 kW	6.0 kW	6.5 kW	8.0 kW
WALL MOUNTED ETHEREA // INVERTER + // SILVER	KIT-XE7-JKE-3	KIT-XE9-JKE-3	KIT-XE12-JKE-3	KIT-XE15-JKE-3	KIT-XE18-JKE	KIT-XE21-JKE		
WALL MOUNTED ETHEREA // INVERTER + // WHITE	KIT-E7-JKE-3	KIT-E9-JKE-3	KIT-E12-JKE-3	KIT-E15-JKE-3	KIT-E18-JKE	KIT-E21-JKE	KIT-E24-JKE	KIT-E28-JKE
WALL MOUNTED RE TYPE // STANDARD INVERTER		KIT-RE9-JKE	KIT-RE12-JKE	KIT-RE15-JKE	KIT-RE18-JKE		KIT-RE24-JKE	
WALL MOUNTED // STANDARD INVERTER		KIT-UE9-JKE	KIT-UE12-JKE					
WALL MOUNTED TYPE // INVERTER + // -15°C		KIT-E9-HKEA	KIT-E12-HKEA	KIT-E15-HKEA	KIT-E18-HKEA	KIT-E21-HKEA		
WALL-MOUNTED TYPE // STANDARD HEAT PUMP		KIT-PW9-GKE	KIT-PW12-GKE		KIT-PW18-GKE		KIT-PW24-JKE	
WALL-MOUNTED TYPE // STANDARD HEAT PUMP		KIT-UW9-GKE	KIT-UW12-GKE					
FLOOR CONSOLE TYPE // INVERTER +		KIT-E9-GFE-1	KIT-E12-GFE-1		KIT-E18-GFE-1			
SINGLE SPLIT FLOOR OR CEILING TYPE // INVERTER				KIT-E15-DTE	KIT-E18-DTE	KIT-E21-DTE		
MULTI SPLIT 2X1 E-ION PLUS				KIT-2E77-HKE-1 / 2E712-HKE-1	KIT-2E912-HKE / 2E1212-HKE			
ETHEREA MULTI SPLIT 2X1 // INVERTER +				KIT-2XE/E77-JKE / 2XE/E79-JKE / 2XE/E712-JKE / 2XE/E99-JBE	KIT-2XE/E99-JKE / 2XE/E912-JKE / 2XE/E1212-JKE			
ETHEREA MULTI SPLIT 3X1 // INVERTER +						KIT-3XE/E7712-JBE / 3XE/E7715-JBE 3XE/E7712-JKE / 3XE/E7715-JKE		
ETHEREA MULTI SPLIT 4X1 // INVERTER +								KIT-4XE/E77712-JBE / 4XE/E77715-JBE / 4XE/E77712-JKE / 4XE/E77715-JKE

Panasonic
ideas for life

www.panasonic.eu

Due to the ongoing innovation of our products, the specifications of this catalogue are valid barring typographic errors, and may be subject to minor modifications by the manufacturer without prior warning in order to improve the product. The total or partial reproduction of this catalogue is prohibited without the express authorisation of Panasonic UK Ltd.

Contact Details:
E-mail: aircon.info@panasonic.co.uk
Telephone: 01344 853182
www.panasonic.co.uk

Address: Panasonic Air Conditioning
Panasonic House
Willoughby Road
Bracknell
Berkshire
RG12 8FP

Panasonic®

www.panasonic.eu