SERVICE MANUAL

24KL12W
SAP243TCL
SAP243RCL

SPLIT SYSTEM AIR CONDITIONER

Apr. 1990

Indoor Unit

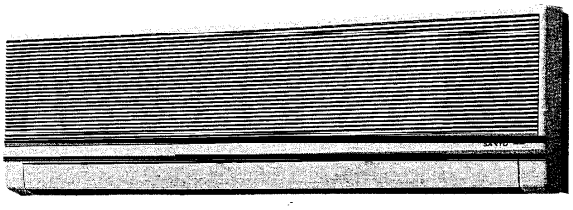

KL2412W

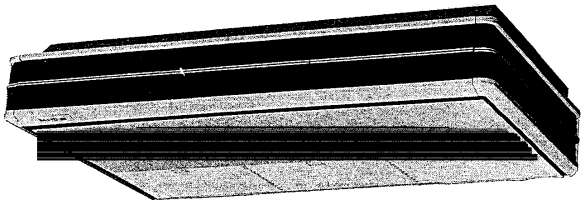

SAP243TL

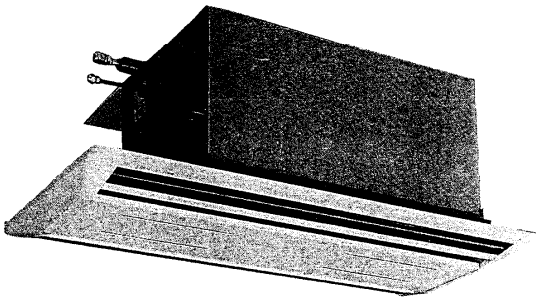

SAP243RL

Outdoor Unit

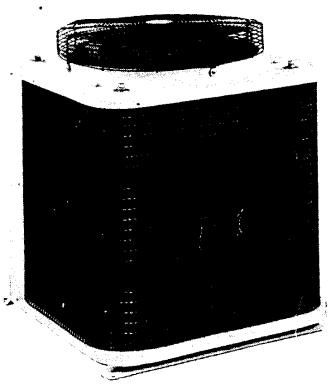

CL2412/SAP243CL

8526481012500

REFERENCE NO. WM-700336

Downloaded from www.Manualslib.com manuals search engine

Table of Contents

	Page
1. SPECIFICATIONS	1
1) Unit Specifications	1
24KL12W	1
SAP243TCL	2
SAP243RCL	3
2) Major Component Specifications	4
24KL12W	4
SAP243TCL	5
SAP243RCL	6
3) Other Component Specifications	7
2. OPERATING RANGE	9
3. CONSTRUCTION OF THE UNIT	10
4. DIMENSIONAL DATA	12
KL2412W/SAP243TL	12
SAP243RL	13
CL2412/SAP243CL	14
5. COOLING CAPACITY	15
24KL12W (230V)	15
24KL12W (208V)	16
SAP243TCL (230V)	17
SAP243TCL (208V)	18
SAP243RCL (230V)	19
SAP243RCL (208V)	20
6. AIR THROW DISTANCE CHART	21
7. PERFORMANCE CHARTS	22
8. OPERATING INSTRUCTIONS (24KL12W)	30
Naming of Parts	30
Controls and Indicators	31
Operation Thumbnails	32
Operation	33
1) Cooling	33
A. Manual Cooling	33
B. Energy Saver Mode	34
C. Night Setback Mode	34
2) Adjusting the Fan Speed	35
A. Automatic	35
B. Manual	35
3) Fan Only	35
4) Using the Timer	35
A. TIMER OFF Mode	35
B. TIMER ON Mode	35

Downloaded from www.Manualslib.com manuals search engine

Page
5) Adjusting the Air Flow Direction 36
A. Horizontal 36
B. Vertical 36
Care and Cleaning 37
8A. OPERATING INSTRUCTIONS (SAP243TCL) 38
Naming of Parts 38
Controls and Indicators 39
Operation 40
Cooling 40
Adjusting the Air Flow Direction 41
Care and Cleaning 42
8B. OPERATING INSTRUCTIONS (SAP243RCL) 43
1) Remote Control Unit 43
2) How to Operate 44
3) Air Flow Direction Adjustment 45

9. FUNCTION 46
1) Temperature Control 46
2) Freeze Prevention 47
3) Function at Low Ambient Temperature 48
10. INSTALLATION INSTRUCTIONS 49
1) Installation Site Selection 49
2) Connecting Piping between Indoor and Outdoor Unit 51
3) Insulation of Refrigerant Piping 51
4) Wiring Instructions 51
5) Air Purging 52
6) Test Run 55
11. REFRIGERANT FLOW DIAGRAM 56
12. ELECTRICAL DATA 57
Schematic Diagram 57
24KL12W 57
SAP243TCL 58
SAP243RCL 59
Electrical Wiring Diagram 60
24KL12W 60
SAP243TCL 62
SAP243RCL 64
P.C.B. Ass'y 66
Electrical Characteristics 69
13. TROUBLESHOOTING 70
14. CHECKING AND REPLACING ELECTRICAL COMPONENTS 86
15. DISASSEMBLY PROCEDURES 99
16. PARTS LIST 116

Downloaded from www.Manualslib.com manuals search engine

1. SPECIFICATIONS

1) Unit Specifications

Model No.			24KL12W
Unit Model No.		Indoor unit	KL2412W
		Outdoor unit	CL2412
PERFORMANCE			Cooling
Capacity		BTU/hr.	22,400 / 22,000
Air circulation (High)		cu.ft./min.	540 / 510
Moisture removal (High)		Pints/hr.	6.5 / 6.4
ELECTRICAL RATING			
Frequency		Hz	60
Phase			Single
Voltage rating		V	230 / 208
Available voltage range		V	187 ~ 253
Running amperes		A	10.5 / 11.4
Power input		W	2,400 / 2,350
Power factor		%	99 / 99
S.E.E.R.		BTU/Whr.	9.5 / 9.6
FEATURES			
Controls			Microcomputer
Control switch			Remote control
Temperature control			IC Thermostat
Timer			ON/OFF 12-hours
Fan speeds	Indoor fan / Outdoor fan		3 / 1
Air deflection	Horizontal / Vertical		Manual / Manual
Air filter			Washable, easy access
Compressor			Rotary
Refrigerant (R-22) amount at shipment lbs.(kg)			6.8 (3.1)
Refrigerant control			Capillary tube
Operation sound	In-Hi/Me/Lo	dB-A	45 / 42 / 40
	Out-Hi	dB-A	52
Refrigerant piping connections			Flare type
Max allowable piping length at shipment ft.(m)			50 (15)
Limit of piping length		ft.(m)	100 (30)
Limit elevation difference between two units		ft.(m)	50 (15)
Refrigerant pipe diameter o.d.	Narrow pipe	in.(mm)	1/4 (6.35)
	Wide pipe	in.(mm)	5/8 (15.88)
Refrigerant piping kit			Optional
Accessories			Hanging wall bracket

DIMENSIONS & WEIGHT		Indoor unit	Outdoor unit
Height	in.(mm)	14-9/16 (370)	30-1/8 (765)
Width	in.(mm)	49-7/32 (1,250)	26-3/8 (670)
Depth	in.(mm)	8-9/32 (210)	26-3/8 (670)
Net weight	lbs.(kg)	40 (18)	178 (81)
Shipping volume	cu.ft.(cu.m)	6.9 (0.195)	16.3 (0.461)
Shipping weight (Approx.)	lbs.(kg)	53 (24)	195 (86)

DATA SUBJECT TO CHANGE WITHOUT NOTICE.

Remarks: 1. Rating conditions are: Outdoor unit entering air temperature 95°F D.B./75°F W.B.
Indoor unit entering air temperature 80°F D.B./67°F W.B.

Downloaded from www.Manualslib.com manuals search engine

1) Unit Specifications

Model No.			SAP243TCL	
Unit Model No.		Indoor unit	SAP243TL	
		Outdoor unit	SAP243CL	
PERFORMANCE			Cooling	
Capacity		BTU/hr.	23,000 / 22,600	
Air circulation (High)		cu.ft./min.	565 / 530	
Moisture removal (High)		Pints/hr.	7.1	
ELECTRICAL RATING				
Frequency		Hz	60	
Phase			Single	
Voltage rating		V	230 / 208	
Available voltage range		V	187 ~ 253	
Running amperes		A	11.1 / 11.9	
Power input		W	2,520 / 2,450	
Power factor		%	99 / 99	
S.E.E.R.		BTU/Whr.	9.5 / 9.6	
FEATURES				
Controls			IC control	
Control switch			Remote control	
Temperature control			IC Thermostat	
Timer			-	
Fan speeds	Indoor fan / Outdoor fan		2 / 1	
Air deflection	Horizontal / Vertical		Automatic / Manual	
Air filter			Washable, easy access	
Compressor			Rotary	
Refrigerant (R-22) amount at shipment		lbs.(kg)	6.8 (3.1)	
Refrigerant control			Capillary tube	
Operation sound	In-Hi/Lo	dB-A	46 / 40	
	Out-Hi	dB-A	52	
Refrigerant piping connections			Flare type	
Max allowable piping length at shipment		ft.(m)	50 (15)	
Limit of piping length		ft.(m)	100 (30)	
Limit elevation difference between two units		ft.(m)	50 (15)	
Refrigerant pipe diameter o.d.	Narrow pipe	in.(mm)	1/4 (6.35)	
	Wide pipe	in.(mm)	5/8 (15.88)	
Refrigerant piping kit			Optional	
Accessories			Mounting bracket	
DIMENSIONS & WEIGHT			Indoor unit	Outdoor unit
Height		in.(mm)	9- 1/16 (230)	30-1/8 (765)
Width		in.(mm)	46-27/32 (1,190)	26-3/8 (670)
Depth		in.(mm)	26- 9/16 (675)	26-3/8 (670)
Net weight		lbs.(kg)	72.8 (33)	178 (81)
Shipping volume		cu.ft.(cu.m)	11.6 (0.33)	16.3 (0.461)
Shipping weight (Approx.)		lbs.(kg)	96.8 (44)	195 (86)

DATA SUBJECT TO CHANGE WITHOUT NOTICE.

Remarks: 1. Rating conditions are: Outdoor unit entering air temperature 95°F D.B./75°F W.B.
Indoor unit entering air temperature 80°F D.B./67°F W.B.

Downloaded from www.Manualslib.com manuals search engine

1) Unit Specifications

Model No.			SAP243RCL
Unit Model No.		Indoor unit	SAP243RL
		Outdoor unit	SAP243CL
PERFORMANCE			Cooling
Capacity		BTU/hr.	23,600 / 23,000
Air circulation (High)		cu.ft./min.	565 / 530
Moisture removal (High)		Pints/hr.	7.0 / 6.8
ELECTRICAL RATING			
Frequency		Hz	60
Phase			Single
Voltage rating		V	230 / 208
Available voltage range		V	187 ~ 253
Running amperes		A	11.3 / 12.1
Power input		W	2,570 / 2,480
Power factor		%	99 / 99
S.E.E.R.		BTU/Whr.	9.5 / 9.6
FEATURES			
Controls			IC control
Control switch			Remote control
Temperature control			IC Thermostat
Timer			-
Fan speeds	Indoor fan / Outdoor fan		2 / 1
Air deflection	Horizontal / Vertical		Manual / Manual
Air filter			Washable, easy access
Compressor			Rotary
Refrigerant (R-22) amount at shipment lbs.(kg)			6.8 (3.1)
Refrigerant control			Capillary tube
Operation sound	In-Hi/Lo	dB-A	48 / 41
	Out-Hi	dB-A	52
Refrigerant piping connections			Flare type
Max allowable piping length at shipment ft.(m)			50 (15)
Limit of piping length		ft.(m)	100 (30)
Limit elevation difference between two units		ft.(m)	50 (15)
Refrigerant pipe diameter o.d.	Narrow pipe	in.(mm)	1/4 (6.35)
	Wide pipe	in.(mm)	5/8 (15.88)
Refrigerant piping kit			Optional
Accessories			Mounting bracket

DIMENSIONS & WEIGHT		Indoor unit	Outdoor unit
Height	in.(mm)	19- 9/32 (490)	30-1/8 (765)
Width	in.(mm)	51- 3/16 (1,300)	26-3/8 (670)
Depth	in.(mm)	24-13/32 (620)	26-3/8 (670)
Net weight	lbs.(kg)	99 (45)	178 (81)
Shipping volume	cu.ft.(cu.m)	23.9 (0.68)	16.3 (0.461)
Shipping weight (Approx.)	lbs.(kg)	154 (70)	195 (86)

DATA SUBJECT TO CHANGE WITHOUT NOTICE.

Remarks: 1. Rating conditions are: Outdoor unit entering air temperature 95°F D.B./75°F W.B.
Indoor unit entering air temperature 80°F D.B./67°F W.B.

Downloaded from www.Manualslib.com manuals search engine

2) Major Component Specifications

Unit Model No.	KL2412W
Controller P.C.B.	POW-K243G5
Control circuit fuse	250V - 3A
Remote control unit	RCS-K2412W

Unit Model No.		CL2412	
Controller P.C.B.		POW-CL2412	
Control circuit fuse		250V - 5A	
Compressor		Hermetic Rotary Type	
Compressor model No.		C-R170H6S	
Source		230/208V, 60Hz, Single phase	
Pole		2	
Nominal output	W	1,700	
Compressor oil	cc	1,350 (Special oil for Rotary Compressor)	
Coil resistance (Ambient temp. 77°F)	Ω	C - R : 0.73 C - S : 1.91	
Protective Devices, Compressor		Internal line type	-
Overload relay model		-	-
Operating temp.	Open °F	320 ± 9	-
	Close °F	198 ± 20	-
Operating amperes (Ambient temp. 77°F)		-	-
Run capacitor	μF	35	
	VAC	400	
Crankcase heater	V - W	230 - 30	

Unit Model No.		KL2412W	CL2412
Fan		Cross-flow	Propeller
Number....dia. (length)	mm	1....φ110, (L990)	1....φ500
Fan motor model		KFH4Q-31A6P	KFC8S-101A6P
Source		230/208V, 60Hz, Single phase	
No. of pole....rpm. (230/208V)(Hi)		4....1,272/1,180	8....827/809
Nominal output	W	30	100
Coil resistance (Ambient temp. 68°F)	Ω	WHT - BRN : 210.4 ORG - YEL : 424.9 WHT - VLT : 45.5 VLT - ORG : 25.8 ORG - PNK : 114.4	WHT - BRN : 24.2 BLK - PNK : 53.1
Safety Devices			
Fan motor, internal type Operating temp.	Open °F	248 ± 9	248 ± 9
	Close °F	171 ± 27	171 ± 27
Run capacitor	μF	1.8	5
	VAC	440	440

DATA SUBJECT TO CHANGE WITHOUT NOTICE.

Downloaded from www.Manualslib.com manuals search engine

2) Major Component Specifications

Unit Model No.	SAP243TL
Controller P.C.B.	POW-36T
Control circuit fuse	250V - 5A
Remote control unit	RCS-243T

Unit Model No.		SAP243CL	
Controller P.C.B.		POW-CL2412	
Control circuit fuse		250V - 5A	
Compressor		Hermetic Rotary Type	
Compressor model No.		C-R170H6S	
Source		230/208V, 60Hz, Single phase	
Pole		2	
Nominal output	W	1,700	
Compressor oil	cc	1,350 (Special oil for Rotary Compressor)	
Coil resistance (Ambient temp. 77°F)	Ω	C - R : 0.73 C - S : 1.91	
Protective Devices, Compressor		Internal line type	-
Overload relay model		-	-
Operating temp.	Open °F	320 ± 9	-
	Close °F	198 ± 20	-
Operating amperes (Ambient temp. 77°F)		-	-
Run capacitor	μF	35	
	VAC	400	
Crankcase heater	V - W	230 - 30	

Unit Model No.		SAP243TL	SAP243CL
Fan		Centrifugal	Propeller
Number....dia. (length)	mm	1.... φ110, (L990)	1.... φ500
Fan motor model		KFG4T-61A6P	KFC8S-101A6P
Source		230/208V, 60Hz, Single phase	
No. of pole....rpm. (230/208V)(Hi.)		4.....960/890	8....827/809
Nominal output	W	60	100
Coil resistance (Ambient temp. 68°F)	Ω	WHT - BRN : 52.7 WHT - VLT : 30.6 VLT - YEL : 56.1 YEL - PNK : 17.4	WHT - BRN : 24.2 BLK - PNK : 53.1
Safety Devices			
Fan motor, internal type Operating temp.	Open °F	248 ± 9	248 ± 9
	Close °F	171 ± 27	171 ± 27
Run capacitor	μF	2	5
	VAC	440	440

DATA SUBJECT TO CHANGE WITHOUT NOTICE.

Downloaded from www.Manualslib.com manuals search engine

2) Major Component Specifications

Unit Model No.	SAP243RL
Controller P.C.B.	POW-36R
Control circuit fuse	250V - 5A
Remote control unit	RCS-36R

Unit Model No.		SAP243CL	
Controller P.C.B.		POW-CL2412	
Control circuit fuse		250V - 5A	
Compressor		Hermetic Rotary Type	
Compressor model No.		C-R170H6S	
Source		230/208V, 60Hz, Single phase	
Pole		2	
Nominal output	W	1,700	
Compressor oil	cc	1,350 (Special oil for Rotary Compressor)	
Coil resistance (Ambient temp. 77°F)	Ω	C - R : 0.73 C - S : 1.91	
Protective Devices, Compressor		Internal line type	-
Overload relay model		-	-
Operating temp.	Open °F	320 ± 9	-
	Close °F	198 ± 20	-
Operating amperes (Ambient temp. 77°F)		-	-
Run capacitor	μF	35	
	VAC	400	
Crankcase heater	V - W	230 - 30	

Unit Model No.		SAP243RL	SAP243CL
Fan		Centrifugal	Propeller
Number....dia. (length)	mm	1.... φ180(L230)	1.... φ500
Fan motor model		KFG4S-81B6P	KFC8S-101A6P
Source		230/208V, 60Hz, Single phase	
No. of pole....rpm. (230/208V)		4....1,160/1065	8....827/809
Nominal output	W	80	100
Coil resistance (Ambient temp. 68°F)	Ω	WHT - BRN : 55.2 WHT - YEL : 53.2 YEL - PNK : 74.6	WHT - BRN : 24.2 BLK - PNK : 53.1
Safety Devices			
Fan motor, internal type Operating temp.	Open °F	248 ± 9	248 ± 9
	Close °F	171 ± 27	171 ± 27
Run capacitor	μF	3	5
	VAC	440	440

DATA SUBJECT TO CHANGE WITHOUT NOTICE.

Downloaded from www.Manualslib.com manuals search engine

3) Other Component Specifications

Transformer		ATR-J122U
Rating	Primary	AC 220V 60HZ
	Secondary	12V 0.63A
	Capacity	12VA
Resistance	Ω (at 79 °F)	Primary (WHT - WHT) : 146.9
		Secondary (BRN - BRN) : 1.3
Thermal Cutoff		259°F 2A 250V
Unit Model No.		KL2412, SAP243TL SAP243RL CL2412 SAP243CL

Thermister (Indoor coil temp. sensor)		PTC-51H-S3			
Resistance	kΩ	32°F	185.5 ± 5%	86°F	45.1 ± 5%
		50°F	112.2 ± 5%	104°F	29.7 ± 5%
		68°F	70.1 ± 5%	122°F	20.0 ± 5%
Unit Model No.		KL2412			

Thermister (Indoor temperature sensor)		OCS5K-UL			
Resistance	kΩ	50°F	10.3 ± 4%	86°F	4.0 ± 4%
		59°F	8.0 ± 4%	104°F	2.6 ± 4%
		68°F	6.3 ± 4%	122°F	1.8 ± 4%
		77°F	5.0 ± 4%		
Unit Model No.		SAP243RL			

Thermostat (Freeze Protection)		RTB-4U302
Operating Temps.	°F	OFF 23 ± 2.7
		ON 50 ± 3.6
Contact rating		AC 200/240V : FLA 1A
		LRA 6A
Unit Model No.		SAP243TL

Thermostat (Freeze Protection)		RTB-4U301
Operating Temps.	°F	OFF 23 ± 2.7
		ON 50 ± 3.6
Contact rating		AC 200/240V : FLA 1A
		LRA 6A
Unit Model No.		SAP243RL

Synchro Motor		M12
Rated voltage		AC200 - 240V 60Hz
Rating		5 RPM 3 W
Resistance	kΩ (at 77 °F)	11.15 ± 15%
Unit Model No.		SAP243TL

Downloaded from www.Manualslib.com manuals search engine

3) Other Component Specifications

Thermister (Outdoor coil sensor)	PBC-41E-S4			
Resistance kΩ	14°F	23.7 ± 5%	77°F	5.5 ± 5%
	32°F	15.0 ± 5%	86°F	4.6 ± 5%
	50°F	9.8 ± 5%	104°F	3.2 ± 5%
	68°F	6.6 ± 5%		
Unit Model No.	CL2412, SAP243CL			

Thermister (Outdoor air sensor)	PBC-41E-S4			
Resistance kΩ	14°F	23.7 ± 5%	77°F	5.5 ± 5%
	32°F	15.0 ± 5%	86°F	4.6 ± 5%
	50°F	9.8 ± 5%	104°F	3.2 ± 5%
	68°F	6.6 ± 5%		
Unit Model No.	CL2412, SAP243CL			

Relay	MY2F-T1-USTS
Coil rated	DC 24V
Coil resistance kΩ (at 68°F)	650 ± 15%
Contact rating	AC 240V : 5A
Unit Model No.	CL2412, SAP243CL

Relay	CLK-16E3-21
Coil rated	240V 60Hz
Coil resistance kΩ (at 77°F)	2.5 ± 15%
Contact rating	AC 240V : FLA A LRA 108A
Unit Model No.	CL2412, SAP243CL

Thermistor (PTC)	TDK 101YV
Rated max. voltage	AC 400V
max. ampere	11.5A
Resistance Ω (at 77°F)	100 ± 25%
Unit Model No.	CL2412, SAP243CL

Thermostat(for fan speed control)	YTB-4U305F
Operating temperature °F	80 ± 2.5 OFF (Terminal C - H)
	75 + 2.5, − 0.9 ON (Terminal C - H)
Contact rating	AC 200 ~ 240V 0.02A
Unit Model No.	CL2412, SAP243CL

Downloaded from www.Manualslib.com manuals search engine

2. OPERATING RANGE

Temperature	Indoor air intake temp.	Outdoor air intake temp.
Maximum	95°F DB / 71°F WB	115°F DB
Minimum	67°F DB / 57°F WB	0°F DB

Downloaded from www.Manualslib.com manuals search engine

3. CONSTRUCTION OF THE UNIT

INDOOR UNIT KL2412W

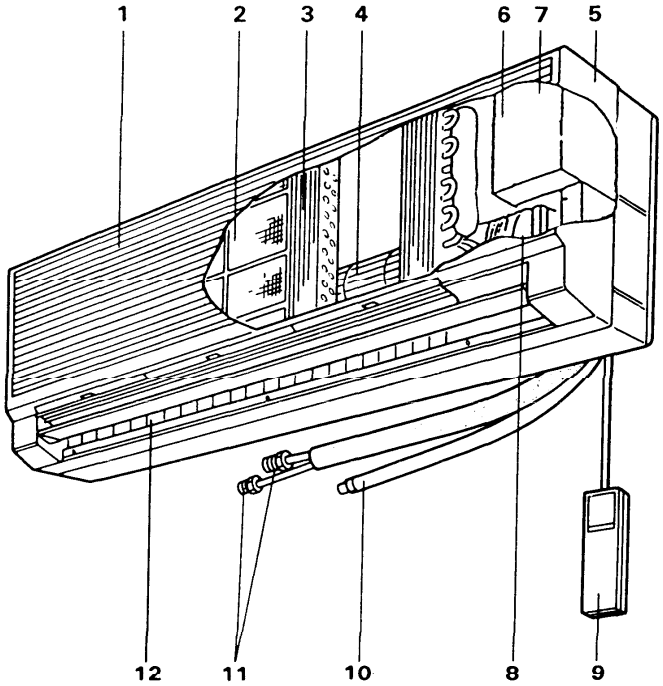

1. **Air intake**
2. **Air filter** (Slide-out)
3. **Evaporator** (= **Indoor heat exchanger**)
4. **Indoor** fan
5. **Casing**
6. **Electrical component box**
7. **PCB Ass'y** (inside component box)
8. **Fan motor**
9. **Remote control unit**
10. ***Drain hose***
11. **Refrigerant piping**
12. **Air outlet**

INDOOR UNIT SAP243TL

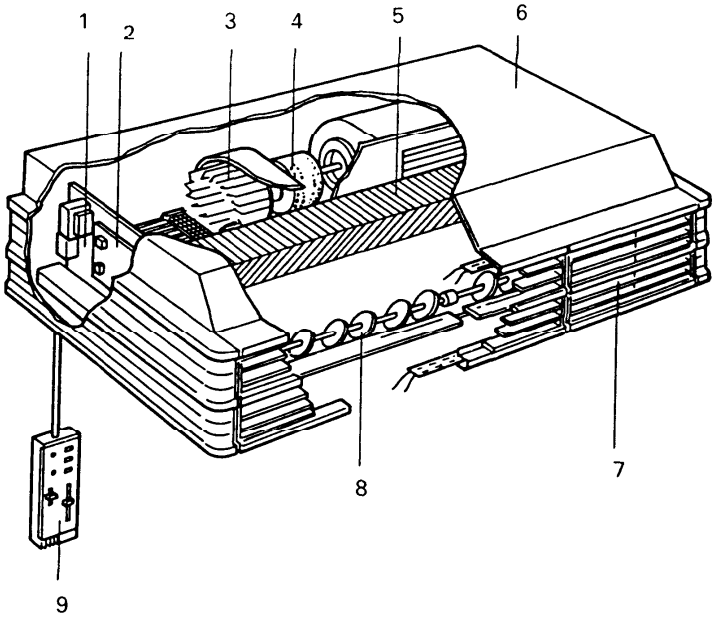

1. Electrical component box
2. P.C.B. Ass'y
3. Centrifugal fan
4. Fan motor
5. Evaporator (=Indoor heat exchanger)
6. Casing
7. Air outlet
8. Auto deflector
9. Remote control unit

Downloaded from www.Manualslib.com manuals search engine

INDOOR UNIT SAP243RL

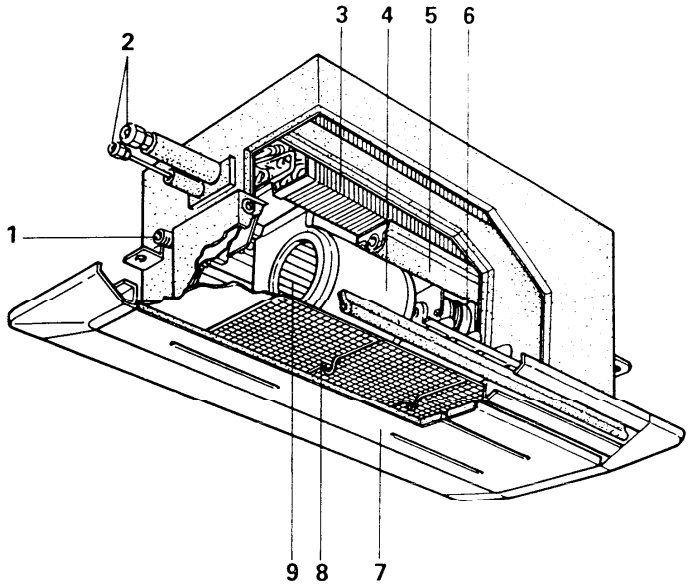

1. Drain hose
2. Refrigerant tubing
3. Evaporator (= Indoor heat exchanger)
4. Blower casing
5. Drain pan
6. Fan motor
7. Air discharge panel
8. Air filter
9. Blower

OUTDOOR UNIT CL2412/SAP243CL

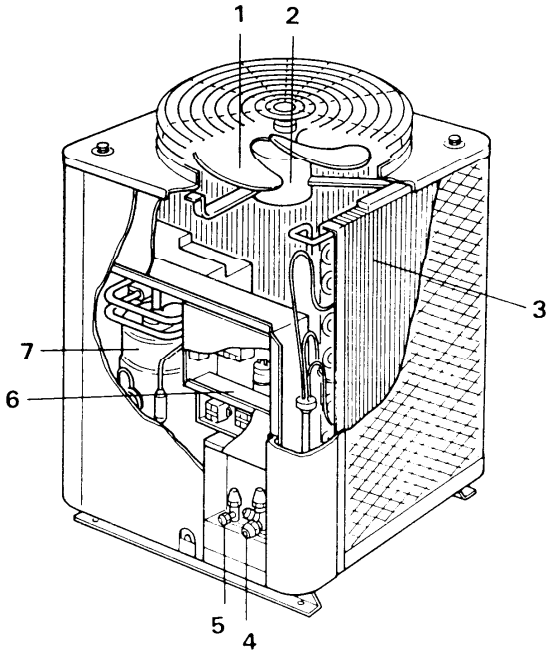

1. Propeller fan
2. Fan motor
3. Condenser (= Outdoor heat exchanger)
4. Service valve (Wide tube)
5. Service valve (Narrow tube)
6. Electrical component box
7. Compressor

Downloaded from www.Manualslib.com manuals search engine

4. DIMENSIONAL DATA

Indoor Unit : KL2412W

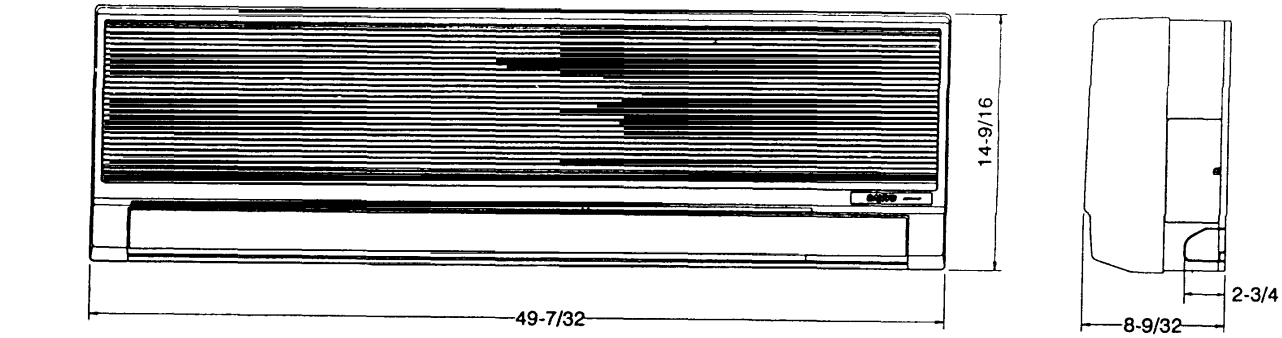

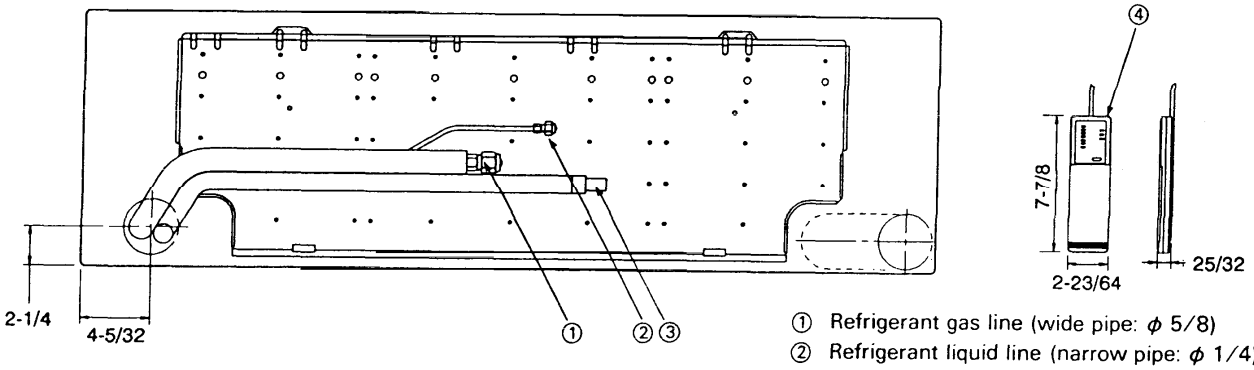

① Refrigerant gas line (wide pipe: ϕ 5/8)
② Refrigerant liquid line (narrow pipe: ϕ 1/4)
③ Drain hose OD 1-1/4
④ Remote control unit

Indoor Unit : SAP243TL

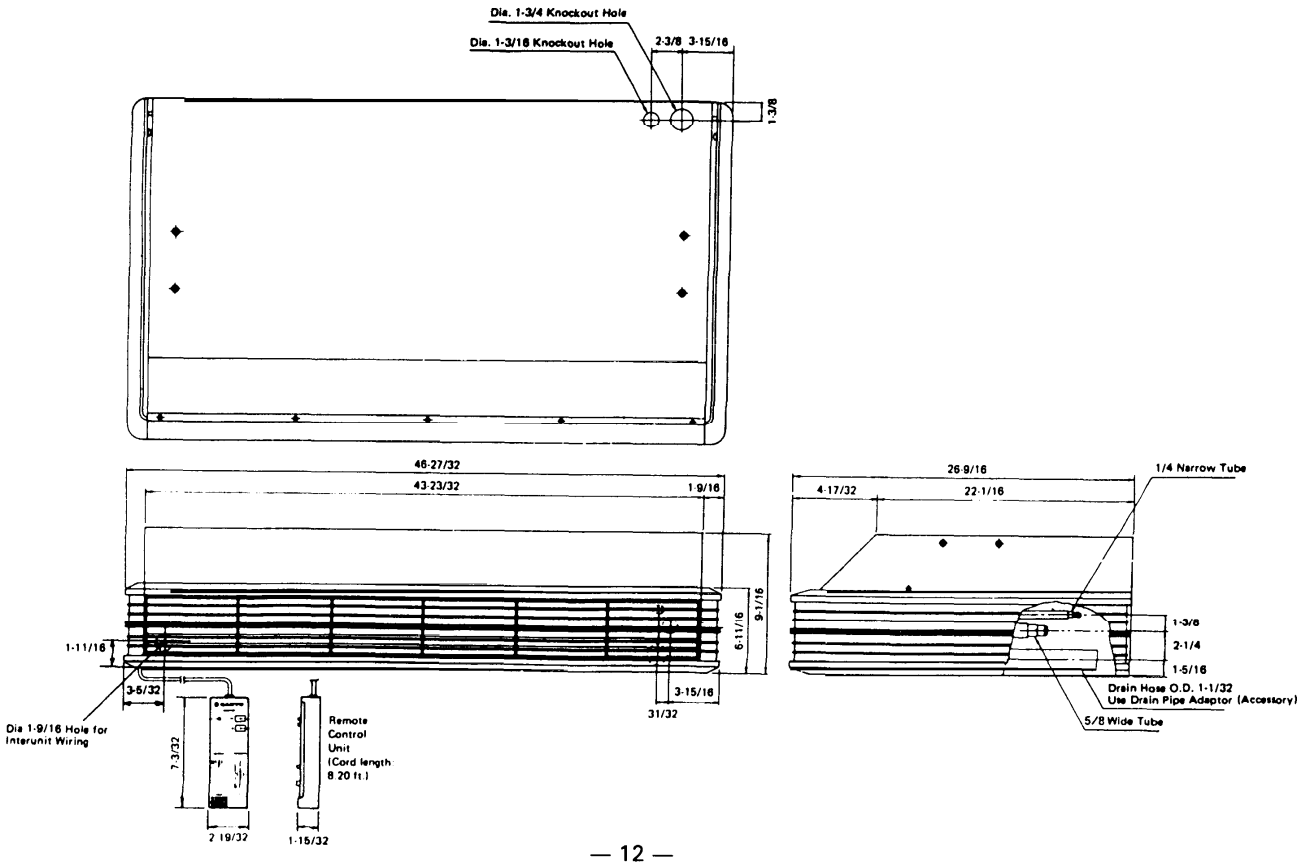

Downloaded from www.Manualslib.com manuals search engine

Indoor Unit : SAP243RL

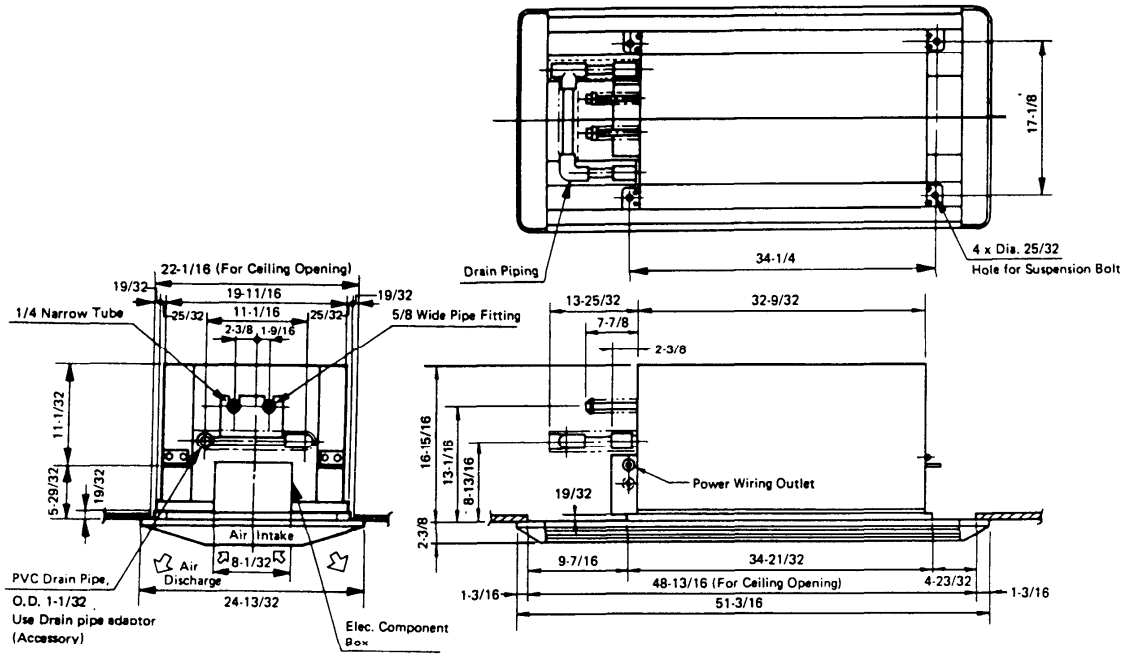

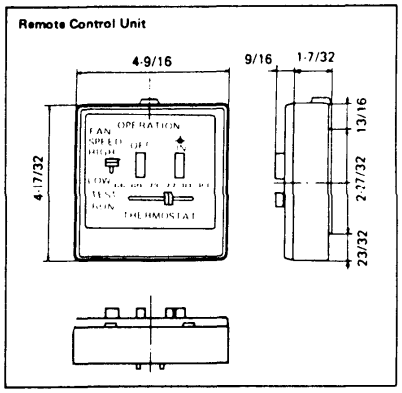

Downloaded from www.Manualslib.com manuals search engine

DIMENSIONAL DATA

Outdoor Unit : CL2412/SAP243CL

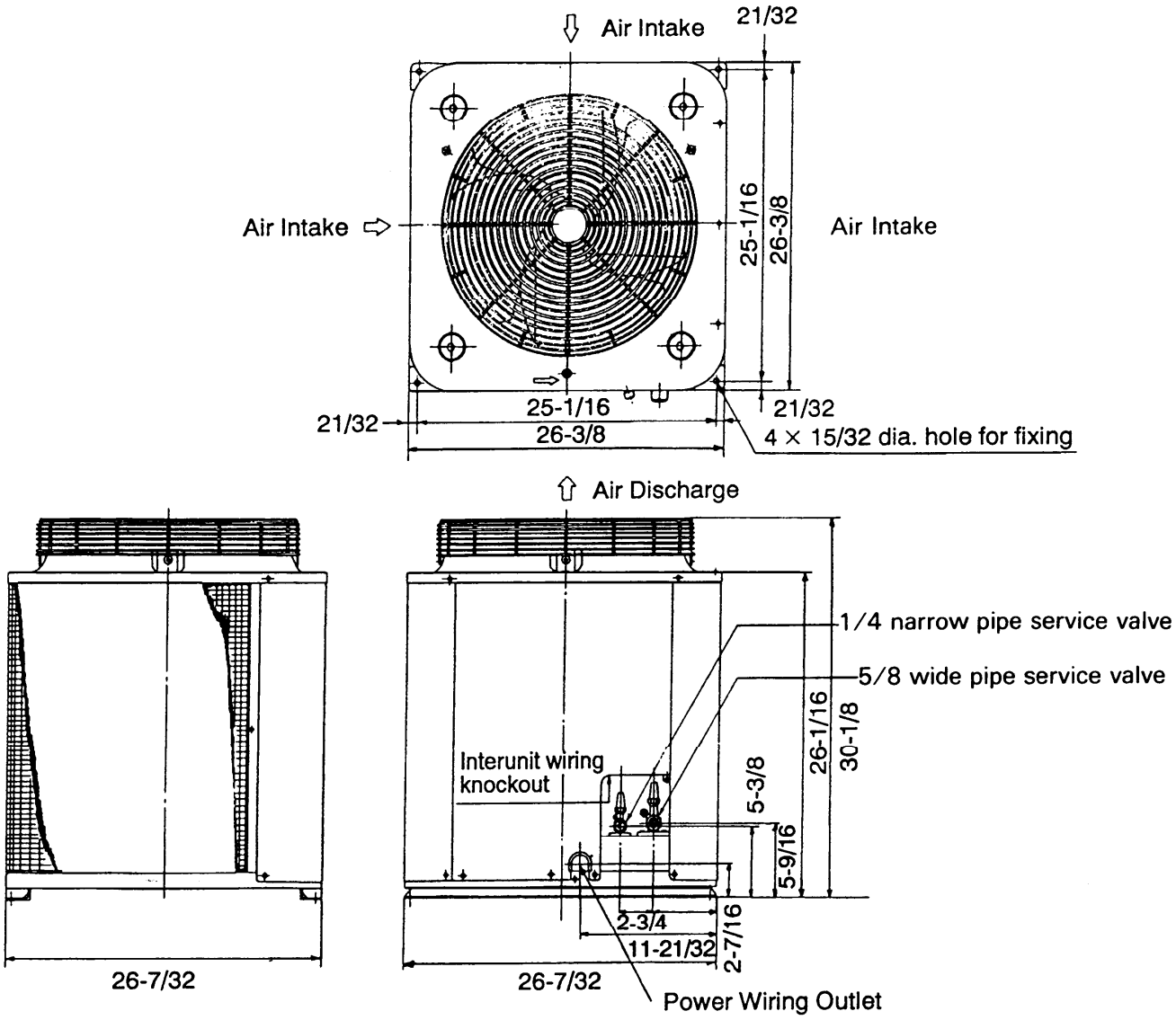

Downloaded from www.Manualslib.com manuals search engine

5. COOLING CAPACITY

1PHASE 60Hz/230 V MODEL NAME : 24KL12W

RATED CAPACITY : 22,400 BTU/H AIR FLOW RATE : 540 CFM							
EVAPORATOR		CONDENSER					
ENTERING TEMP °F(°C)		AMBIENT TEMP °F(°C)					
W.B	D.B		75(23.9)	85(29.4)	95(35)	105(40.6)	115(46.1)
59 (15.0)		TC	22,180	21,170	20,160	19,020	17,470
		KW	1.70	1.85	2.02	2.18	2.40
	72 (22.2)	SHC	15,800	15,270	14,750	14,170	13,400
	76 (24.4)	SHC	17,700	17,160	16,640	16,060	15,300
	80 (26.7)	SHC	19,680	19,150	18,620	18,050	17,280
	84 (28.9)	SHC	21,570	21,040	20,160	19,020	17,470
	88 (31.1)	SHC	22,180	21,170	20,160	19,020	17,470
63 (17.2)		TC	22,940	22,220	21,350	20,180	18,590
		KW	1.71	1.88	2.05	2.23	2.45
	72 (22.2)	SHC	13,390	13,040	12,630	12,080	11,350
	76 (24.4)	SHC	15,290	14,940	14,520	13,980	13,250
	80 (26.7)	SHC	17,270	16,920	16,500	15,960	15,230
	84 (28.9)	SHC	19,160	18,820	18,400	17,850	17,130
	88 (31.1)	SHC	21,060	20,710	20,300	19,750	18,590
67 (19.4)		TC	23,560	23,180	* 22,400	21,170	19,710
		KW	1.73	1.89	2.07	2.26	2.50
	72 (22.2)	SHC	10,900	10,730	10,380	9,850	9,240
	76 (24.4)	SHC	12,790	12,620	12,280	11,750	11,140
	80 (26.7)	SHC	14,770	14,610	14,260	13,730	13,120
	84 (28.9)	SHC	16,670	16,500	16,160	15,630	15,020
	88 (31.1)	SHC	18,560	18,400	18,050	17,520	16,910
71 (21.7)		TC	24,300	23,900	23,300	22,240	20,940
		KW	1.75	1.91	2.10	2.32	2.56
	72 (22.2)	SHC	8,330	8,170	7,930	7,520	7,020
	76 (24.4)	SHC	10,230	10,070	9,830	9,420	8,920
	80 (26.7)	SHC	12,210	12,050	11,810	11,400	10,900
	84 (28.9)	SHC	14,110	13,950	13,710	13,300	12,800
	88 (31.1)	SHC	16,000	15,840	15,600	15,190	14,690
75 (23.9)		TC	24,770	24,510	23,970	23,120	22,180
		KW	1.78	1.95	2.13	2.37	2.62
	76 (24.4)	SHC	7,670	7,570	7,380	7,080	6,760
	80 (26.7)	SHC	9,650	9,560	9,360	9,060	8,740
	84 (28.9)	SHC	11,550	11,450	11,260	10,960	10,630
	88 (31.1)	SHC	13,440	13,350	13,160	12,860	12,530

TC:Total Cooling Capacity (BTU/H)
SHC:Sensible Heat Capacity (BTU/H)
KW:Compressor Input (KW)
Rating conditions(*MARK) are
:Outdoor Ambient Temp.95°F D.B.
:Indoor Unit Entering Air Temp.80°F D.B./67°F W.B.

Downloaded from www.Manualslib.com manuals search engine

COOLING CAPACITY 1PHASE 60Hz/208 V MODEL NAME : 24KL12W

RATED CAPACITY : 22,000 BTU/H AIR FLOW RATE : 510 CFM							
EVAPORATOR		CONDENSER					
ENTERING TEMP °F(°C)		AMBIENT TEMP °F(°C)					
W.B	D.B		75(23.9)	85(29.4)	95(35)	105(40.6)	115(46.1)
59 (15.0)		TC	21,780	20,790	19,800	18,680	17,160
		KW	1.68	1.83	2.00	2.16	2.38
	72 (22.2)	SHC	15,410	14,880	14,370	13,790	13,030
	76 (24.4)	SHC	17,220	16,690	16,170	15,600	14,840
	80 (26.7)	SHC	19,110	18,580	18,060	17,480	16,730
	84 (28.9)	SHC	20,910	20,380	19,800	18,680	17,160
	88 (31.1)	SHC	21,780	20,790	19,800	18,680	17,160
63 (17.2)		TC	22,530	21,820	20,970	19,820	18,260
		KW	1.70	1.86	2.03	2.20	2.43
	72 (22.2)	SHC	13,100	12,750	12,340	11,800	11,080
	76 (24.4)	SHC	14,910	14,560	14,150	13,600	12,880
	80 (26.7)	SHC	16,790	16,450	16,030	15,490	14,770
	84 (28.9)	SHC	18,600	18,250	17,840	17,300	16,570
	88 (31.1)	SHC	20,410	20,060	19,650	19,100	18,260
67 (19.4)		TC	23,140	22,770	* 22,000	20,790	19,360
		KW	1.71	1.88	2.05	2.23	2.48
	72 (22.2)	SHC	10,700	10,530	10,190	9,670	9,060
	76 (24.4)	SHC	12,510	12,340	12,000	11,470	10,870
	80 (26.7)	SHC	14,400	14,230	13,890	13,360	12,750
	84 (28.9)	SHC	16,200	16,030	15,690	15,170	14,560
	88 (31.1)	SHC	18,010	17,840	17,500	16,970	16,360
71 (21.7)		TC	23,870	23,470	22,880	21,850	20,570
		KW	1.73	1.90	2.08	2.30	2.53
	72 (22.2)	SHC	8,240	8,080	7,840	7,430	6,940
	76 (24.4)	SHC	10,050	9,890	9,650	9,240	8,750
	80 (26.7)	SHC	11,930	11,770	11,540	11,130	10,630
	84 (28.9)	SHC	13,740	13,580	13,340	12,930	12,440
	88 (31.1)	SHC	15,550	15,390	15,150	14,740	14,250
75 (23.9)		TC	24,330	24,070	23,540	22,700	21,780
		KW	1.76	1.93	2.11	2.35	2.59
	76 (24.4)	SHC	7,590	7,490	7,300	7,000	6,680
	80 (26.7)	SHC	9,470	9,380	9,190	8,890	8,560
	84 (28.9)	SHC	11,280	11,180	10,990	10,690	10,370
	88 (31.1)	SHC	13,090	12,990	12,800	12,500	12,180

TC:Total Cooling Capacity (BTU/H)
SHC:Sensible Heat Capacity (BTU/H)
KW:Compressor Input (KW)

Rating conditions(*MARK) are
:Outdoor Ambient Temp.95°F D.B.
:Indoor Unit Entering Air Temp.80°F D.B./67°F W.B.

Downloaded from www.Manualslib.com manuals search engine

COOLING CAPACITY 1PHASE 60Hz 230 V MODEL NAME : SAP243TCL

RATED CAPACITY : 23,000 BTU/H AIR FLOW RATE : 565 CFM							
EVAPORATOR		CONDENSER					
ENTERING TEMP °F(°C)		AMBIENT TEMP °F(°C)					
W.B	D.B		75(23.9)	85(29.4)	95(35)	105(40.6)	115(46.1)
59 (15.0)		TC	22,770	21,740	20,700	19,530	17,940
		KW	1.69	1.84	2.01	2.17	2.39
	72 (22.2)	SHC	16,250	15,710	15,180	14,590	13,810
	76 (24.4)	SHC	18,260	17,720	17,190	16,600	15,820
	80 (26.7)	SHC	20,370	19,830	19,300	18,710	17,930
	84 (28.9)	SHC	22,390	21,740	20,700	19,530	17,940
	88 (31.1)	SHC	22,770	21,740	20,700	19,530	17,940
63 (17.2)		TC	23,550	22,820	21,920	20,720	19,090
		KW	1.71	1.87	2.04	2.21	2.44
	72 (22.2)	SHC	13,690	13,340	12,920	12,360	11,620
	76 (24.4)	SHC	15,710	15,360	14,930	14,380	13,640
	80 (26.7)	SHC	17,820	17,470	17,040	16,490	15,740
	84 (28.9)	SHC	19,840	19,480	19,060	18,500	17,760
	88 (31.1)	SHC	21,860	21,500	21,080	20,520	19,090
67 (19.4)		TC	24,200	23,810	* 23,000	21,740	20,240
		KW	1.72	1.88	2.06	2.25	2.49
	72 (22.2)	SHC	11,050	10,880	10,530	9,990	9,370
	76 (24.4)	SHC	13,070	12,900	12,550	12,010	11,390
	80 (26.7)	SHC	15,180	15,010	14,660	14,120	13,500
	84 (28.9)	SHC	17,200	17,030	16,680	16,140	15,510
	88 (31.1)	SHC	19,220	19,040	18,690	18,160	17,530
71 (21.7)		TC	24,960	24,540	23,920	22,840	21,510
		KW	1.74	1.91	2.09	2.31	2.54
	72 (22.2)	SHC	8,340	8,180	7,940	7,520	7,010
	76 (24.4)	SHC	10,360	10,200	9,950	9,530	9,030
	80 (26.7)	SHC	12,470	12,310	12,060	11,640	11,140
	84 (28.9)	SHC	14,490	14,320	14,080	13,660	13,150
	88 (31.1)	SHC	16,500	16,340	16,100	15,680	15,170
75 (23.9)		TC	25,440	25,160	24,610	23,740	22,770
		KW	1.77	1.94	2.12	2.36	2.61
	76 (24.4)	SHC	7,660	7,560	7,360	7,060	6,720
	80 (26.7)	SHC	9,770	9,670	9,470	9,170	8,830
	84 (28.9)	SHC	11,780	11,690	11,490	11,180	10,850
	88 (31.1)	SHC	13,800	13,700	13,510	13,200	12,870

TC:Total Cooling Capacity (BTU/H)
SHC:Sensible Heat Capacity (BTU/H)
KW:Compressor Input (KW)

Rating conditions(*MARK) are
:Outdoor Ambient Temp.95°F D.B.
:Indoor Unit Entering Air Temp.80°F D.B./67°F W.B.

Downloaded from www.Manualslib.com manuals search engine

COOLING CAPACITY 1PHASE 60Hz 208 V MODEL NAME : SAP243TCL

RATED CAPACITY : 22,600 BTU/H AIR FLOW RATE : 530 CFM							
EVAPORATOR		CONDENSER					
ENTERING TEMP °F(°C)		AMBIENT TEMP °F(°C)					
W.B	D.B		75(23.9)	85(29.4)	95(35)	105(40.6)	115(46.1)
59 (15.0)		TC	22,370	21,360	20,340	19,190	17,630
		KW	1.68	1.83	2.00	2.16	2.38
	72 (22.2)	SHC	15,840	15,300	14,770	14,190	13,410
	76 (24.4)	SHC	17,750	17,210	16,680	16,090	15,320
	80 (26.7)	SHC	19,740	19,210	18,680	18,090	17,320
	84 (28.9)	SHC	21,650	21,120	20,340	19,190	17,630
	88 (31.1)	SHC	22,370	21,360	20,340	19,190	17,630
63 (17.2)		TC	23,140	22,420	21,540	20,360	18,760
		KW	1.70	1.86	2.03	2.20	2.43
	72 (22.2)	SHC	13,400	13,050	12,630	12,080	11,340
	76 (24.4)	SHC	15,310	14,960	14,540	13,980	13,250
	80 (26.7)	SHC	17,310	16,960	16,530	15,980	15,240
	84 (28.9)	SHC	19,220	18,870	18,440	17,890	17,150
	88 (31.1)	SHC	21,130	20,770	20,350	19,800	18,760
67 (19.4)		TC	23,780	23,390	* 22,600	21,360	19,890
		KW	1.71	1.88	2.05	2.23	2.48
	72 (22.2)	SHC	10,880	10,710	10,360	9,820	9,200
	76 (24.4)	SHC	12,790	12,620	12,270	11,730	11,110
	80 (26.7)	SHC	14,790	14,610	14,270	13,730	13,110
	84 (28.9)	SHC	16,690	16,520	16,180	15,640	15,020
	88 (31.1)	SHC	18,600	18,430	18,090	17,550	16,930
71 (21.7)		TC	24,520	24,110	23,500	22,440	21,130
		KW	1.73	1.90	2.08	2.30	2.53
	72 (22.2)	SHC	8,290	8,130	7,880	7,470	6,960
	76 (24.4)	SHC	10,200	10,040	9,790	9,380	8,870
	80 (26.7)	SHC	12,200	12,030	11,790	11,370	10,870
	84 (28.9)	SHC	14,100	13,940	13,700	13,280	12,780
	88 (31.1)	SHC	16,010	15,850	15,610	15,190	14,690
75 (23.9)		TC	25,000	24,720	24,180	23,320	22,370
		KW	1.76	1.93	2.11	2.35	2.59
	76 (24.4)	SHC	7,610	7,510	7,320	7,020	6,680
	80 (26.7)	SHC	9,610	9,510	9,320	9,010	8,680
	84 (28.9)	SHC	11,520	11,420	11,230	10,920	10,590
	88 (31.1)	SHC	13,430	13,330	13,130	12,830	12,500

TC:Total Cooling Capacity (BTU/H)
SHC:Sensible Heat Capacity (BTU/H)
KW:Compressor Input (KW)

Rating conditions(*MARK) are
:Outdoor Ambient Temp.95°F D.B.
:Indoor Unit Entering Air Temp.80°F D.B./67°F W.B.

Downloaded from www.Manualslib.com manuals search engine

COOLING CAPACITY 1PHASE, 60Hz 230 V MODEL NAME : SAP243RCL

RATED CAPACITY : 23,600 BTU/H AIR FLOW RATE : 565 CFM							
EVAPORATOR		CONDENSER					
ENTERING TEMP °F(°C)		AMBIENT TEMP °F(°C)					
W.B	D.B		75(23.9)	85(29.4)	95(35)	105(40.6)	115(46.1)
59 (15.0)		TC	23,360	22,300	21,240	20,040	18,410
		KW	1.75	1.91	2.08	2.25	2.47
	72 (22.2)	SHC	16,790	16,240	15,700	15,100	14,310
	76 (24.4)	SHC	18,930	18,380	17,840	17,240	16,450
	80 (26.7)	SHC	21,160	20,610	20,070	19,470	18,410
	84 (28.9)	SHC	23,300	22,300	21,240	20,040	18,410
	88 (31.1)	SHC	23,360	22,300	21,240	20,040	18,410
63 (17.2)		TC	24,170	23,410	22,490	21,260	19,590
		KW	1.76	1.93	2.11	2.29	2.52
	72 (22.2)	SHC	14,100	13,750	13,310	12,750	12,000
	76 (24.4)	SHC	16,240	15,880	15,450	14,890	14,130
	80 (26.7)	SHC	18,470	18,120	17,690	17,120	16,370
	84 (28.9)	SHC	20,610	20,250	19,820	19,260	18,500
	88 (31.1)	SHC	22,750	22,390	21,960	21,260	19,590
67 (19.4)		TC	24,830	24,430	* 23,600	22,300	20,770
		KW	1.78	1.95	2.13	2.32	2.58
	72 (22.2)	SHC	11,330	11,160	10,800	10,250	9,620
	76 (24.4)	SHC	13,470	13,290	12,940	12,390	11,760
	80 (26.7)	SHC	15,700	15,530	15,170	14,620	13,990
	84 (28.9)	SHC	17,840	17,660	17,310	16,760	16,130
	88 (31.1)	SHC	19,970	19,800	19,450	18,900	18,260
71 (21.7)		TC	25,610	25,180	24,540	23,430	22,070
		KW	1.80	1.97	2.16	2.39	2.63
	72 (22.2)	SHC	8,480	8,310	8,070	7,640	7,130
	76 (24.4)	SHC	10,620	10,450	10,200	9,780	9,260
	80 (26.7)	SHC	12,850	12,680	12,440	12,010	11,500
	84 (28.9)	SHC	14,990	14,820	14,570	14,150	13,630
	88 (31.1)	SHC	17,120	16,960	16,710	16,290	15,770
75 (23.9)		TC	26,100	25,820	25,250	24,360	23,360
		KW	1.83	2.00	2.19	2.44	2.69
	76 (24.4)	SHC	7,780	7,680	7,480	7,170	6,830
	80 (26.7)	SHC	10,010	9,910	9,710	9,400	9,060
	84 (28.9)	SHC	12,150	12,050	11,850	11,540	11,200
	88 (31.1)	SHC	14,290	14,190	13,990	13,680	13,340

TC:Total Cooling Capacity (BTU/H)
SHC:Sensible Heat Capacity (BTU/H)
KW:Compressor Input (KW)
Rating conditions(*MARK) are
:Outdoor Ambient Temp.95°F D.B.
:Indoor Unit Entering Air Temp.80°F D.B./67°F W.B.

Downloaded from www.Manualslib.com manuals search engine

COOLING CAPACITY 1PHASE 60Hz 208 V MODEL NAME : SAP243RCL

RATED CAPACITY : 23,000 BTU/H AIR FLOW RATE : 530 CFM							
EVAPORATOR		CONDENSER					
ENTERING TEMP °F(°C)		AMBIENT TEMP °F(°C)					
W.B	D.B		75(23.9)	85(29.4)	95(35)	105(40.6)	115(46.1)
59 (15.0)		TC	22,770	21,740	20,700	19,530	17,940
		KW	1.70	1.85	2.02	2.18	2.40
	72 (22.2)	SHC	16,230	15,680	15,150	14,560	13,780
	76 (24.4)	SHC	18,240	17,700	17,170	16,580	15,800
	80 (26.7)	SHC	20,350	19,810	19,280	18,690	17,910
	84 (28.9)	SHC	22,370	21,740	20,700	19,530	17,940
	88 (31.1)	SHC	22,770	21,740	20,700	19,530	17,940
63 (17.2)		TC	23,550	22,820	21,920	20,720	19,090
		KW	1.71	1.88	2.05	2.23	2.45
	72 (22.2)	SHC	13,670	13,320	12,890	12,330	11,590
	76 (24.4)	SHC	15,690	15,340	14,910	14,350	13,610
	80 (26.7)	SHC	17,800	17,450	17,020	16,460	15,720
	84 (28.9)	SHC	19,820	19,460	19,040	18,480	17,740
	88 (31.1)	SHC	21,840	21,480	21,060	20,500	19,090
67 (19.4)		TC	24,200	23,810	* 23,000	21,740	20,240
		KW	1.73	1.89	2.07	2.26	2.50
	72 (22.2)	SHC	11,030	10,850	10,510	9,970	9,340
	76 (24.4)	SHC	13,040	12,870	12,520	11,980	11,360
	80 (26.7)	SHC	15,160	14,980	14,630	14,090	13,470
	84 (28.9)	SHC	17,170	17,000	16,650	16,110	15,490
	88 (31.1)	SHC	19,190	19,020	18,670	18,130	17,510
71 (21.7)		TC	24,960	24,540	23,920	22,840	21,510
		KW	1.75	1.91	2.10	2.32	2.56
	72 (22.2)	SHC	8,310	8,150	7,900	7,490	6,980
	76 (24.4)	SHC	10,330	10,170	9,920	9,500	9,000
	80 (26.7)	SHC	12,440	12,280	12,030	11,610	11,110
	84 (28.9)	SHC	14,460	14,300	14,050	13,630	13,130
	88 (31.1)	SHC	16,480	16,310	16,070	15,650	15,140
75 (23.9)		TC	25,440	25,160	24,610	23,740	22,770
		KW	1.78	1.95	2.13	2.37	2.62
	76 (24.4)	SHC	7,620	7,530	7,330	7,020	6,690
	80 (26.7)	SHC	9,730	9,640	9,440	9,130	8,800
	84 (28.9)	SHC	11,750	11,650	11,460	11,150	10,820
	88 (31.1)	SHC	13,770	13,670	13,480	13,170	12,840

TC:Total Cooling Capacity (BTU/H)
SHC:Sensible Heat Capacity (BTU/H)
KW:Compressor Input (KW)
Rating conditions(*MARK) are
:Outdoor Ambient Temp.95°F D.B.
:Indoor Unit Entering Air Temp.80°F D.B./67°F W.B.

Downloaded from www.Manualslib.com manuals search engine

6. AIR THROW DISTANCE CHART

MODEL : KL2412W

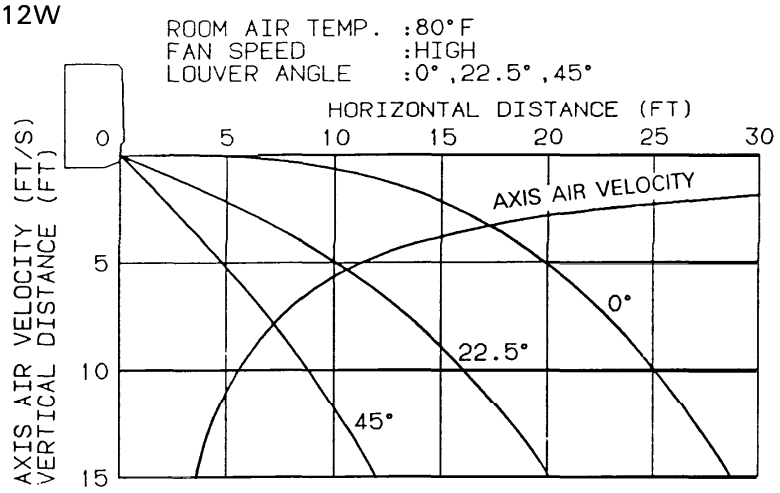

MODEL : SAP243TL

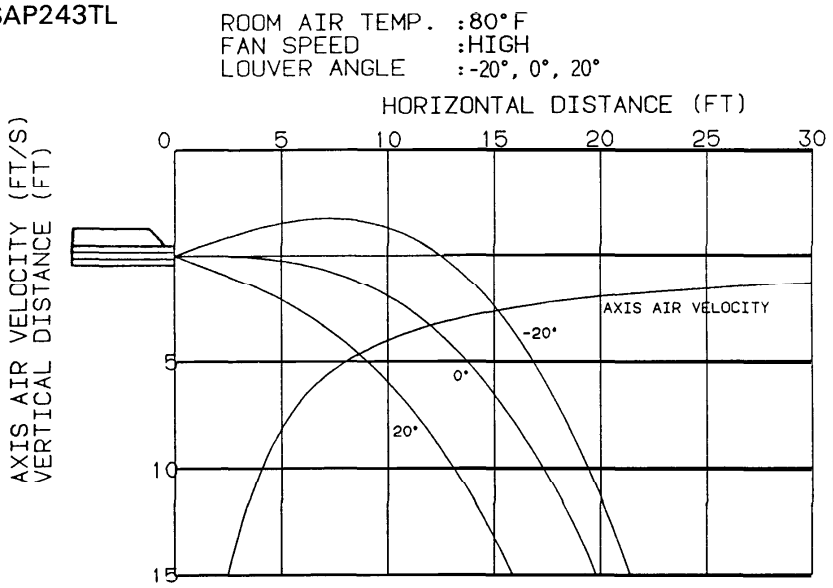

MODEL : SAP243RL

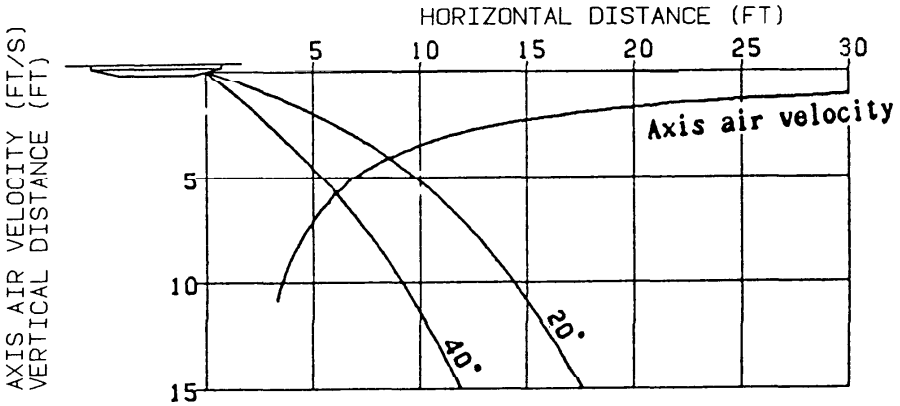

Downloaded from www.Manualslib.com manuals search engine

7. PERFORMANCE CHARTS

24KL12W

Cooling characteristics

Operating current characteristics versus outdoor ambient temperature and indoor temperature (Indoor relative humidity: 50%, indoor fan speed: High, overall value for indoor and outdoor shown.)

230 V (60 Hz)

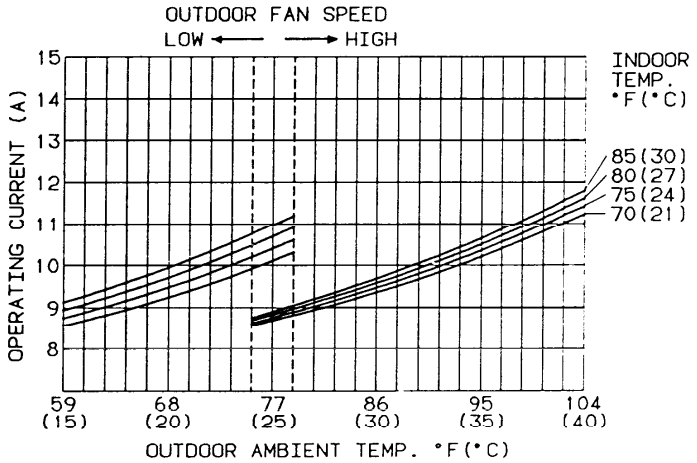

208 V (60 Hz)

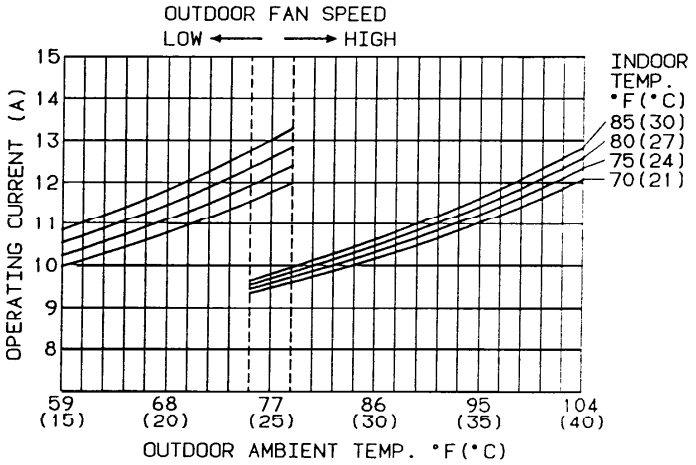

Downloaded from www.Manualslib.com manuals search engine

24KL12W

230 V (60 Hz)

Cooling characteristics

High pressure characteristics versus outdoor ambient temperature and indoor temperature (Indoor relative humidity: 50%, indoor fan speed : High.)

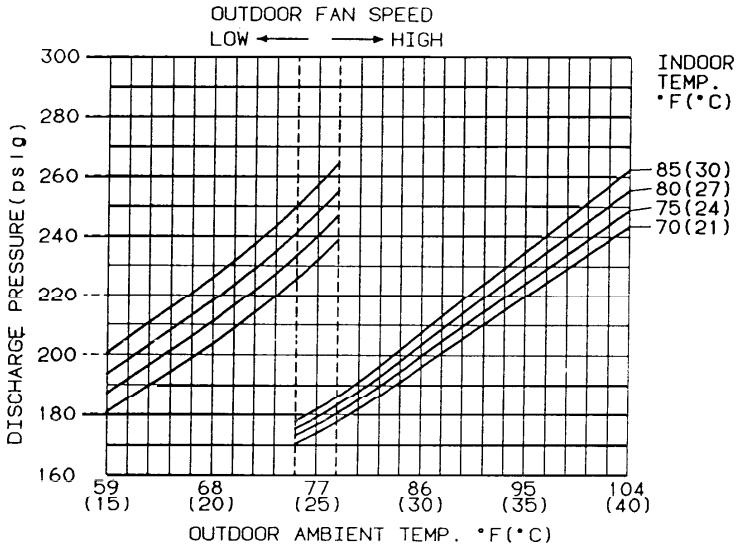

Cooling characteristics

Low pressure characteristics versus outdoor ambient temperature and indoor temperature (Indoor relative humidity: 50%, indoor fan speed: High.)

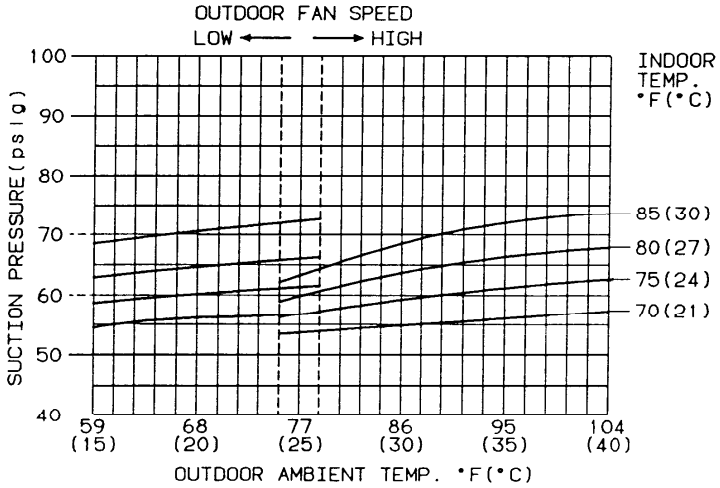

Downloaded from www.Manualslib.com manuals search engine

24KL12W

208 V (60 Hz)

Cooling characteristics

High pressure characteristics versus outdoor ambient temperature and indoor temperature (Indoor relative humidity: 50%, indoor fan speed : High.)

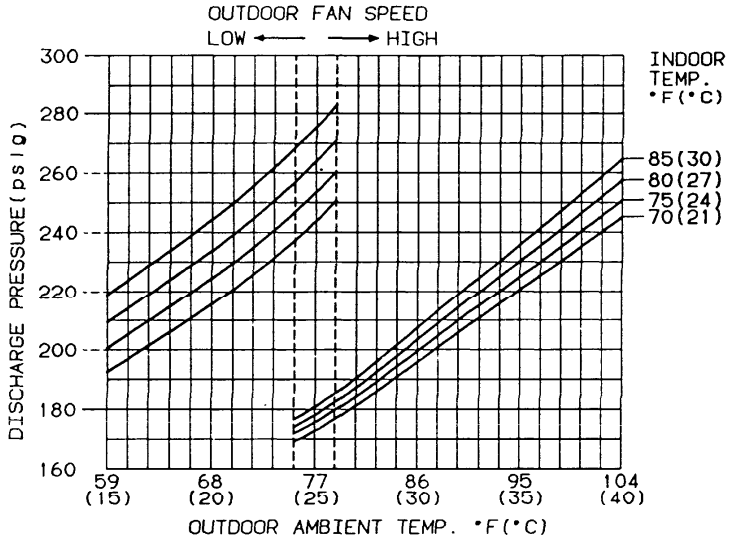

Cooling characteristics

Low pressure characteristics versus outdoor ambient temperature and indoor temperature (Indoor relative humidity: 50%, indoor fan speed : High.)

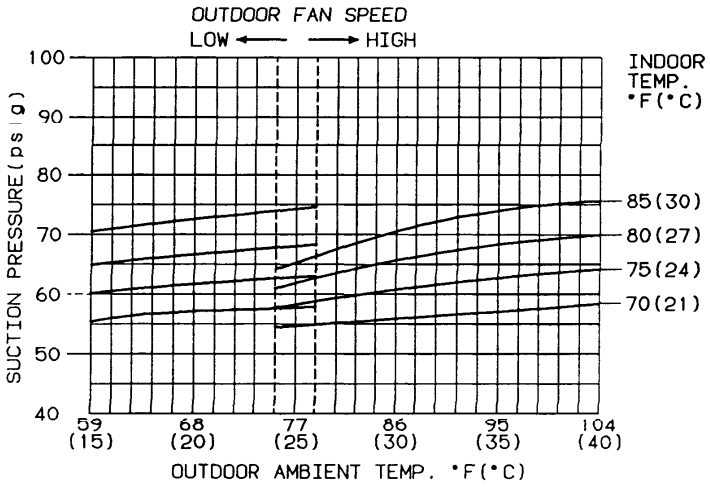

Downloaded from www.Manualslib.com manuals search engine

Cooling characteristics

Operating current characteristics versus outdoor ambient temperature and indoor temperature (Indoor relative humidity: 50%, indoor air velocity: High, overall value for indoor and outdoor shown.)

NOTE

When the outdoor temperature drops to 76°F (24°C) or lower, the outdoor fan speed is switched to Low. Adversely, when the outdoor temperature rises to 78.5°F (26.5°C) or higher, the outdoor fan speed is turned to HIGH.
Therefore, fan speed may vary with outdoor ambient conditions within the dotted line area shown in the chart at right.

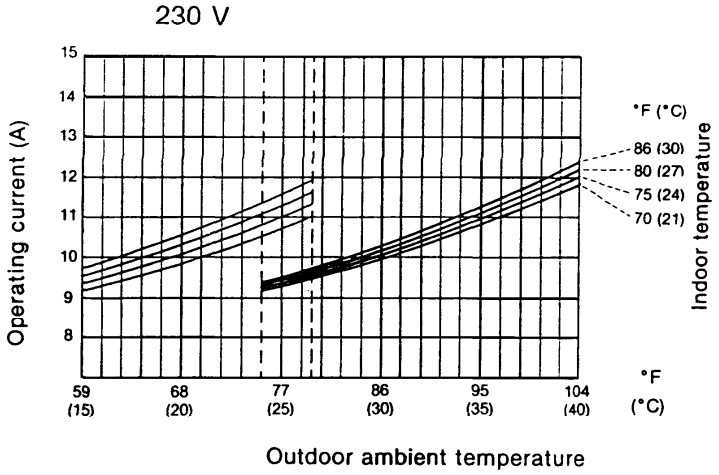

Cooling characteristics

Operating current characteristics versus outdoor ambient temperature and indoor temperature (Indoor relative humidity: 50%, indoor air velocity: High, overall value for indoor and outdoor shown.)

NOTE

When the outdoor temperature drops to 76°F (24°C) or lower, the outdoor fan speed is switched to Low. Adversely, when the outdoor temperature rises to 78.5°F (26.5°C) or higher, the outdoor fan speed is turned to HIGH.
Therefore, fan speed may vary with outdoor ambient conditions within the dotted line area shown in the chart at right.

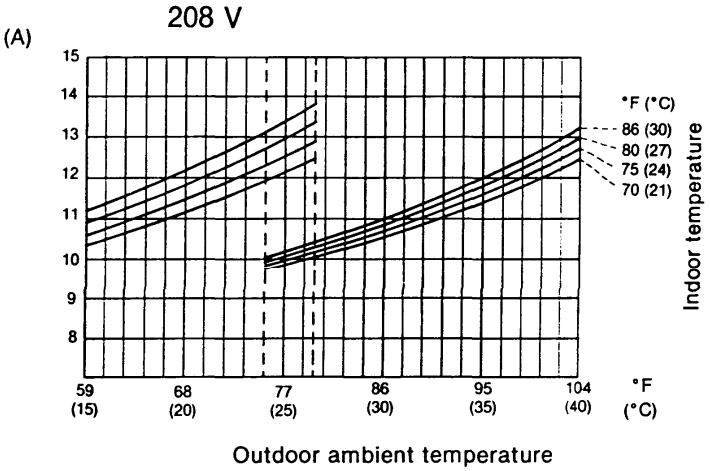

Downloaded from www.Manualslib.com manuals search engine

Cooling characteristics

High pressure characteristics versus outdoor ambient temperature and indoor temperature (Indoor relative humidity: 50%, indoor air velocity: High.)

NOTE

When the outdoor temperature drops to 76°F (24°C) or lower, the outdoor fan speed is switched to Low. Adversely, when the outdoor temperature rises to 78.5°F (26.5°C) or higher, the outdoor fan speed is turned to HIGH.
Therefore, fan speed may vary with outdoor ambient conditions within the dotted line area shown in the chart at right.

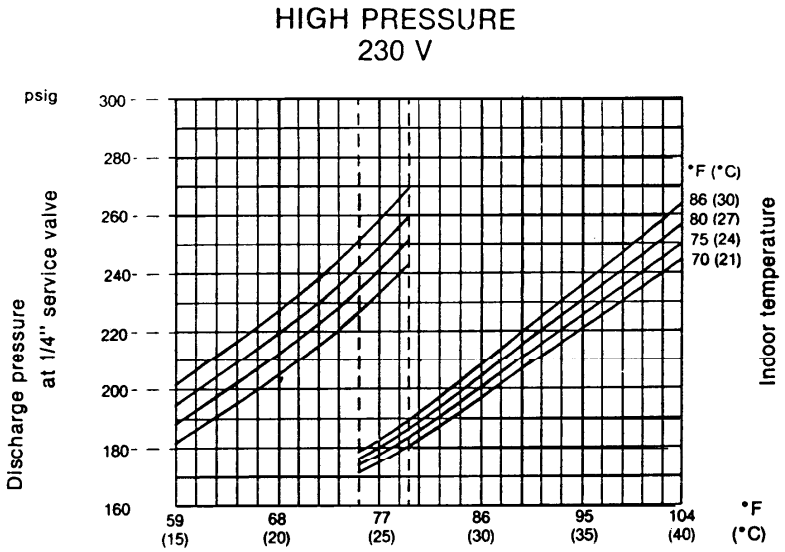

Cooling characteristics

Low pressure characteristics versus outdoor ambient temperature and indoor temperature (Indoor relative humidity: 50%, indoor air velocity: High.)

NOTE

When the outdoor temperature drops to 76°F (24°C) or lower, the outdoor fan speed is switched to Low. Adversely, when the outdoor temperature rises to 78.5°F (26.5°C) or higher, the outdoor fan speed is turned to HIGH.
Therefore, fan speed may vary with outdoor ambient conditions within the dotted line area shown in the chart at right.

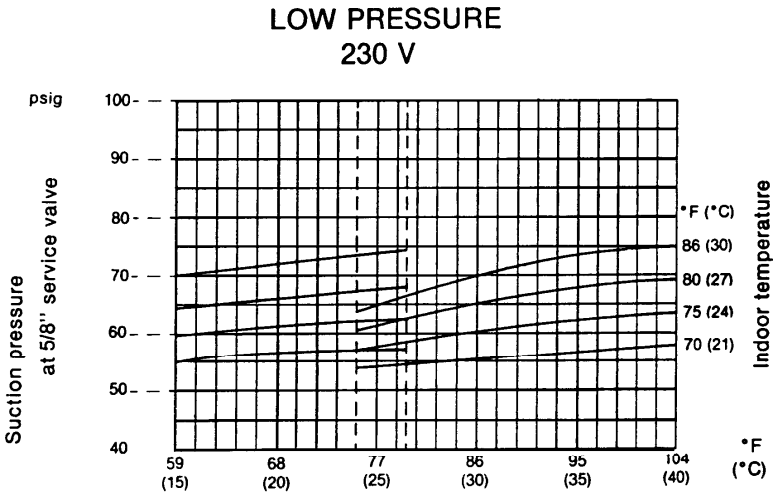

Downloaded from www.Manualslib.com manuals search engine

Cooling characteristics

High pressure characteristics versus outdoor ambient temperature and indoor temperature (Indoor relative humidity: 50%, indoor air velocity: High.)

NOTE

When the outdoor temperature drops to 76°F (24°C) or lower, the outdoor fan speed is switched to Low. Adversely, when the outdoor temperature rises to 78.5°F (26.5°C) or higher, the outdoor fan speed is turned to HIGH.
Therefore, fan speed may vary with outdoor ambient conditions within the dotted line area shown in the chart at right.

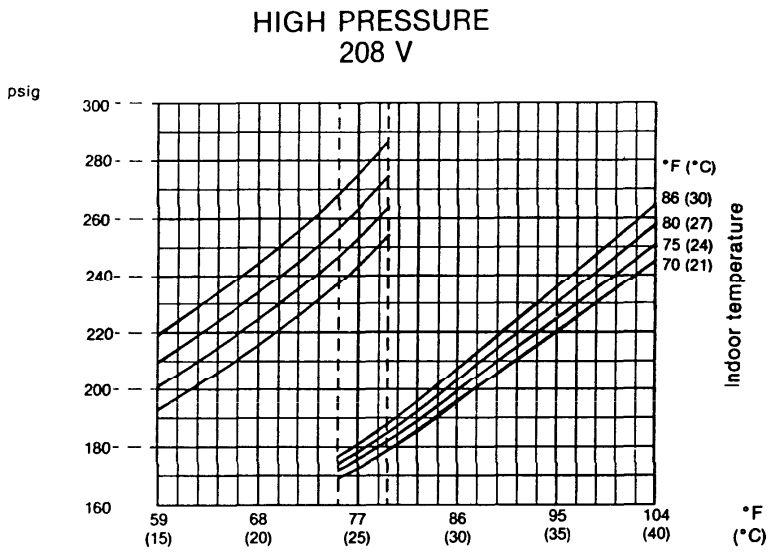

Cooling characteristics

Low pressure characteristics versus outdoor ambient temperature and indoor temperature (Indoor relative humidity: 50%, indoor air velocity: High.)

NOTE

When the outdoor temperature drops to 76°F (24°C) or lower, the outdoor fan speed is switched to Low. Adversely, when the outdoor temperature rises to 78.5°F (26.5°C) or higher, the outdoor fan speed is turned to HIGH.
Therefore, fan speed may vary with outdoor ambient conditions within the dotted line area shown in the chart at right.

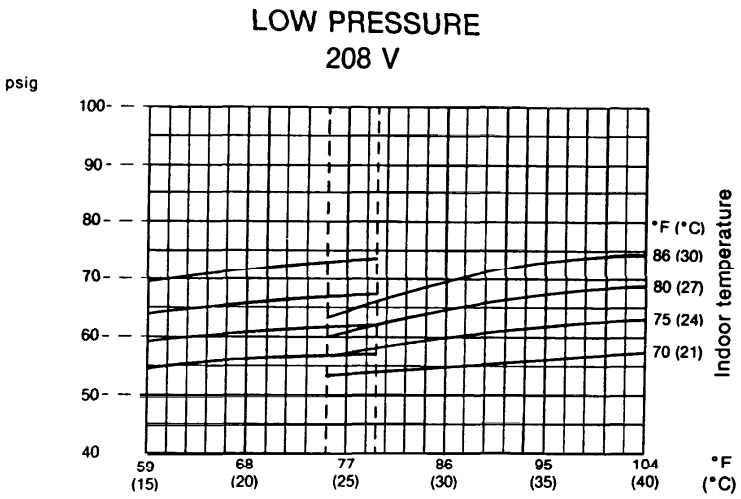

Downloaded from www.Manualslib.com manuals search engine

Cooling characteristics

Operating current characteristics versus outdoor ambient temperature and indoor temperature (Indoor relative humidity: 50%, indoor fan speed: High, overall value for indoor and outdoor shown.)

230 V (60 Hz)

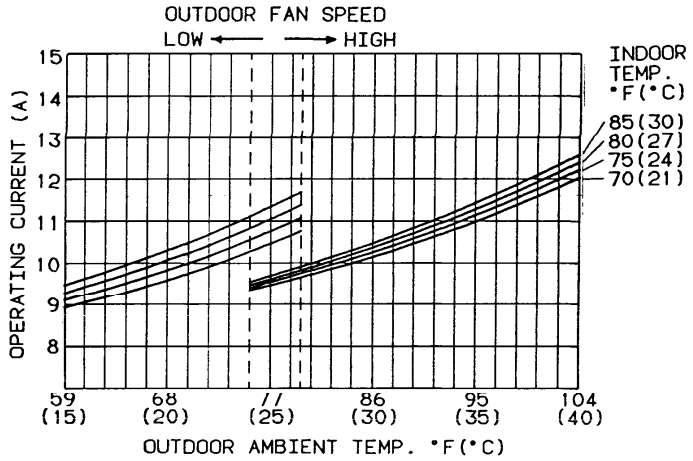

208 V (60 Hz)

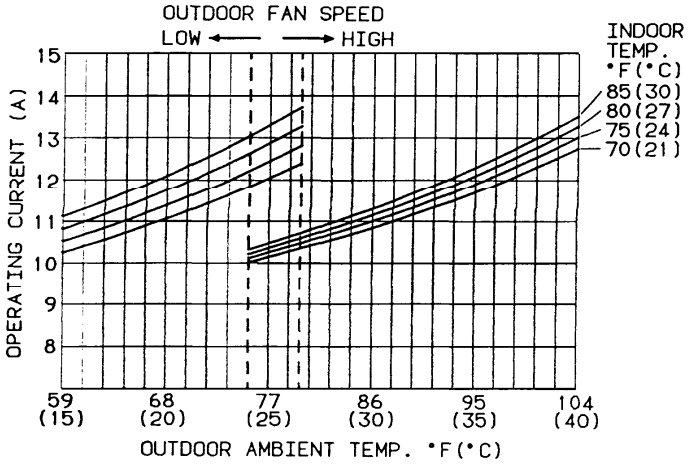

Downloaded from www.Manualslib.com manuals search engine

230/208V (60 Hz)

Cooling characteristics

High pressure characteristics versus outdoor ambient temperature and indoor temperature (Indoor relative humidity: 50%, indoor fan speed : High.)

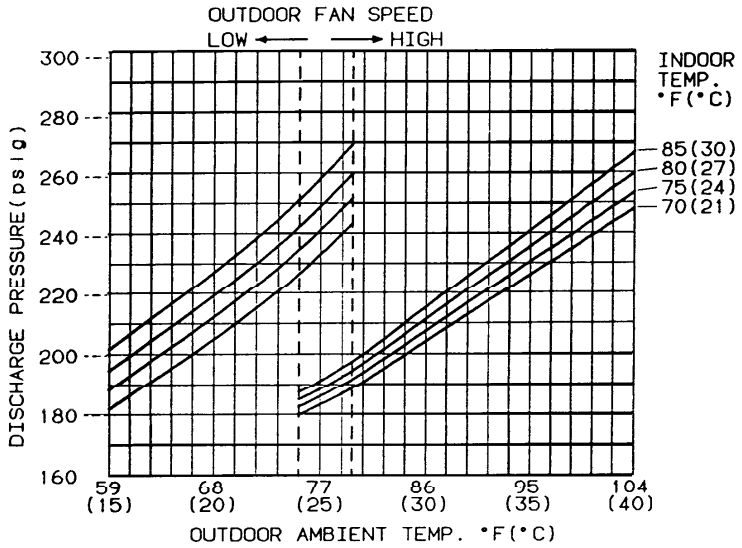

Cooling characteristics

Low pressure characteristics versus outdoor ambient temperature and indoor temperature (Indoor relative humidity: 50%, indoor fan speed: High.)

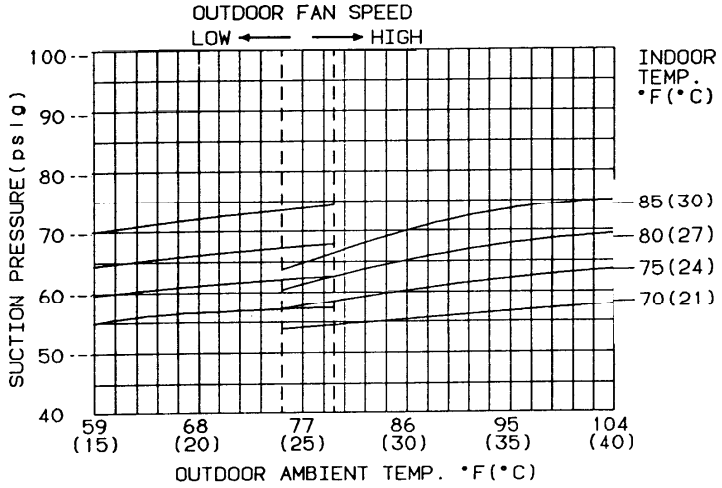

Downloaded from www.Manualslib.com manuals search engine

8. OPERATING INSTRUCTIONS 24KL12W

Naming of Parts

This air conditioner consists of an indoor unit and an outdoor unit.

Air Intake
The return air in the room is drawn into this section and passes through air filters which remove dust and foreign particles.

Air Outlet
By moving the flap and vertical vanes at the air outlet grille, the air flow direction can be adjusted as desired.

Remote Control Unit
The remote control unit contains controls for OPERATION ON/OFF, operation mode selection, temperature adjustment, fan speed, and timer setting.

Refrigerant Tubes
The indoor and outdoor units are connected by copper tubes through which refrigerant gas flows.

Drain Hose
Moisture in the room is condensed and drained off by means of this hose.

Outdoor (Condensing) Unit
The outdoor unit contains the compressor, fan motor, heat exchanger coil, and other electrical components.

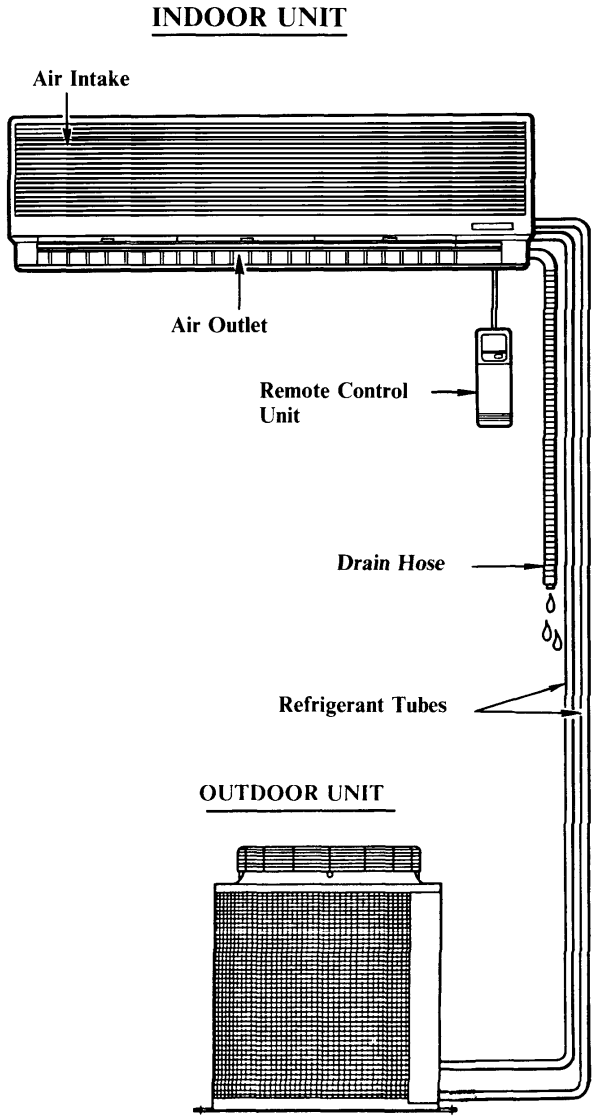

NOTE

This illustration is based on the external view of the model 24KL12W. Consequently, the shape and dimensions may differ from those of the air conditioner which you have selected.

Downloaded from www.Manualslib.com manuals search engine

Controls and Indicators

24KL12W

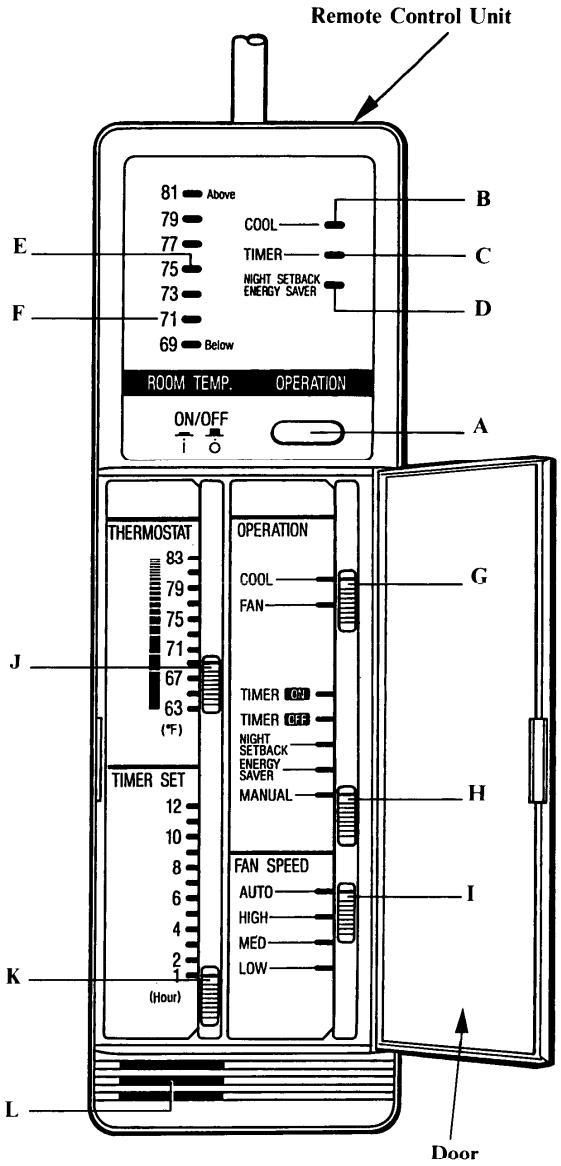

A. OPERATION ON/OFF BUTTON

This button is used to turn the air conditioner ON/OFF.

B. COOLING OPERATION LAMP

This lamp lights when the "COOL" mode is selected.

C. TIMER LAMP

This lamp lights when the system is operating on the timer.

D. SAVING MODE LAMP

This lamp lights when the NIGHT SETBACK or ENERGY SAVER mode is selected.

E. ROOM TEMPERATURE INDICATOR LAMPS

These lamps indicate the approximate room temperature at the location of the remote control unit.

F. TEMPERATURE SCALE

The numbers constitute the temperature scale for cooling (°F).

G. COOL/FAN SELECTOR

Use this control to select "COOL" mode or "FAN(only)" mode without cooling.

H. OPERATION SELECTOR

This has four options:

TIMER ON:	Used to start the system at the set time.
TIMER OFF:	Used to stop the system at the set time.
NIGHT SETBACK: ENERGY SAVER	Used for programmed energy saving operation.
MANUAL:	Used for conventional temperature control operation using the thermostat.

I. FAN SPEED SELECTOR

AUTO: Fan speeds are automatically decided by the microcomputer.
HIGH
MED.: You can manually select the desired fan speed.
LOW

J. THERMOSTAT KNOB

You can regulate the room temperature as desired by adjusting this knob.

K. TIMER SET KNOB

This control is used to set the time at which you wish the air conditioner to go on or off. Each number on the scale shows setting hour.

L. SENSOR

The sensor detects any change in the room temperature.

Downloaded from www.Manualslib.com manuals search engine

Operation Thumbnails 24KL12W

By setting this air conditioner once to the desired temperature, it will automatically regulate the room temperature to that value. Thus you can operate the air conditioner or stop it by simply pressing the OPERATION ON/OFF button.

First, open the door of the remote control unit to gain access to the control panel. Next, carry out the following steps while referring to the sub-section "Controls and Indicators" on the previous page.

What you wish to do	How to do it	What will happen
• Start the air conditioner and cool the room to the desired temperature	1. Set the "G" knob to COOL. 2. Set the "H" knob to MANUAL. 3. Set the "I" knob to AUTO. 4. Set the "J" knob to the desired temperature. 5. Press the "A" OPERATION ON/OFF button.	The "B" and "E" lamps will light, then after a few minutes the air conditioner will start cooling operation.
• To stop the air conditioner immediately while it is operating	1. Press the "A" OPERATION ON/OFF button.	The air conditioner will stop immediately, and all indicator lamps will go out.
• To use the TIMER to stop the air conditioner after several hours	1. Set the "K" knob to the number of hours at which you wish to stop the air conditioner. 2. Set the "H" knob to the TIMER OFF position.	The "C" lamp will light and after the set hours have elapsed the air conditioner will stop automatically.
• To switch the air conditioner to the ENERGY SAVING mode during manual cooling	1. Set the "H" knob from the MANUAL to the NIGHT SETBACK or ENERGY SAVER position.	The "D" lamp will light, the set temperature will automatically change, and the air conditioner will continue to operate in the ENERGY SAVING mode.
• To use the TIMER to start the air conditioner after several hours	1. Set the "K" knob to the number of hours at which you wish to start the air conditioner. 2. Set the "H" knob to the TIMER ON position. 3. Press the "A" OPERATION ON/OFF button.	The "C" lamp will light and after the set hours have elapsed the air conditioner will start to operate automatically.
• To circulate the air in the room without cooling it (fan only operation)	1. Set the "G" knob to FAN. 2. Press the "A" OPERATION ON/OFF button.	The air conditioner will operate as a circulation fan without changing the room temperature. In this case, only the "E" ROOM TEMPERATURE INDICATOR LAMP will light.

The above description is intended to provide you with basic knowledge of your air conditioner. For details of each function, read the relevant sections.

Downloaded from www.Manualslib.com manuals search engine

Operation

24KL12W

1. Cooling

A. Manual Cooling

The Manual mode is used for normal cooling operation.

STEP 1: Set the COOL/FAN SELECTOR knob to COOL.

STEP 2: Set the OPERATION SELECTOR knob to MANUAL.

STEP 3: Set the FAN SPEED as desired.

STEP 4: Press the OPERATION ON/OFF button.
To stop the air conditioner, press the OPERATION ON/OFF button again.

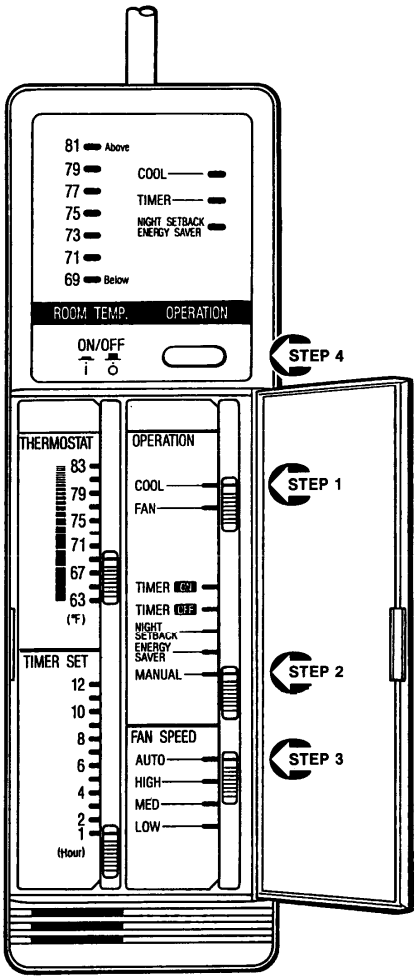

NOTE

1. This appliance has a built-in 3-minute time delay circuit to ensure reliable operation. If the operation button is pressed, the compressor will start running after three minutes.
   In the event of power failure, the unit will stop. When the power is applied, the unit will re-start automatically after 3 minutes.
2. To prevent the appliance from malfunctioning, do not set the selector knob between the two indicated positions. Make sure that it clicks into position.

NOTE

Operation at low ambient temperature

When the ambient temperature is extremely low such as in winter, or if the ambient temperature is low and a strong wind is blowing, the air conditioner may stop and start repetitively for several minutes. This is because of the operation of the protection unit which prevents the air conditioner from freezing.

Downloaded from www.Manualslib.com manuals search engine

B. Energy Saver Mode

STEP 1: Set the OPERATION SELECTOR knob to ENERGY SAVER before turning the system on.

STEP 2: Press the OPERATION button. The ENERGY SAVER and COOL lamps will light.

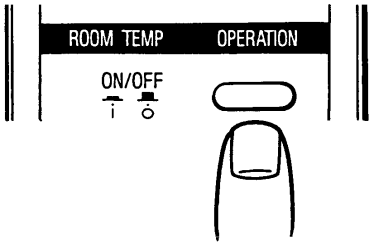

To cancel the Energy Saver mode, move the selector to MANUAL.

C. Night Setback Mode

STEP 1: Set the "H" OPERATION SELECTOR knob to NIGHT SETBACK before turning the system on.

STEP 2: Press the "A" OPERATION ON/OFF button. The NIGHT SETBACK and COOL lamp will light.

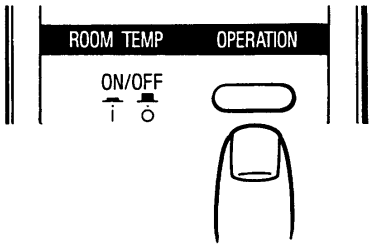

To cancel the Night Setback mode, move the selector to MANUAL.

■ What does the Energy Saver mode mean?

By selecting this mode then pressing the OPERATION ON/OFF button, the air conditioner will perform cooling operation until the temperature in the room reaches the set value, then the thermostat will cause the unit to pause. After about 30 minutes, the air conditioner will automatically raise the set temperature 2°F as shown in the diagram below. This enables you to save energy without sacrificing comfort. This function is convenient when the room is vacant or soft cooling is needed.

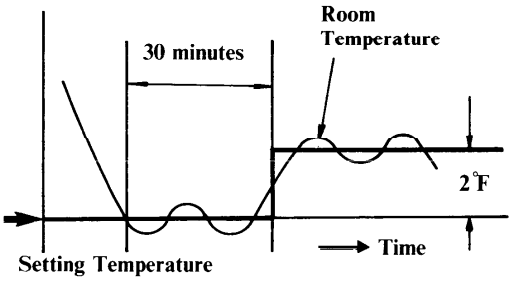

■ What does the Night Setback mode mean?

By selecting this mode then pressing the OPERATION ON/OFF button, the air conditioner will perform cooling operation until the temperature in the room reaches the set value, then the thermostat will cause the unit to pause.

After about 30 minutes, the air conditioner will automatically raise the set temperature 2°F. When the room temperature reaches the newly set value, the thermostat will cause the unit to pause. After about 30 minutes the temperature is again raised by 2°F as shown below. This enables you to save energy. This function is convenient when leaving the air conditioner on all night or soft cooling is needed.

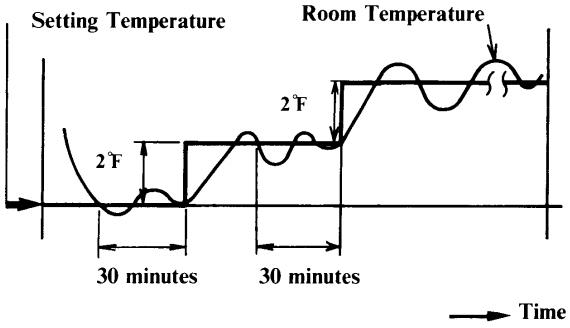

Downloaded from www.Manualslib.com manuals search engine

2. Adjusting the Fan Speed

A. Automatic

Simply set the FAN SPEED selector to the "AUTO" position.

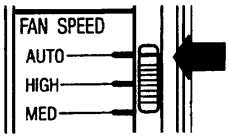

A microcomputer in the air conditioner automatically controls the fan speed when the AUTO mode is selected. When the air conditioner starts operating, the difference between the room temperature and the set temperature is detected by the microcomputer which then automatically switches the fan speed to the most suitable level.

Cooling

When difference between room temperature and set temperature is	FAN SPEED
4°F	High
Between 4°F and 2°F	Medium
Below 2°F	Low

B. Manual

If you want to adjust the fan speed manually during cooling, just set the FAN SPEED control as desired. [HIGH, MED, or LOW]

3. Fan Only

If you want to circulate air without any temperature control, follow these steps:

STEP: 1 Set the COOL/FAN selector knob to FAN.

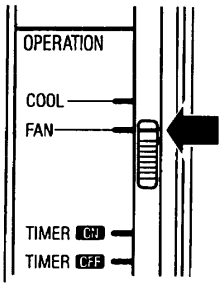

STEP: 2 Press the OPERATION ON/OFF button.

4. Using the Timer

A. TIMER OFF Mode

The system stops after the set hours have elapsed.

STEP 1: Set the TIMER SET knob to the desired number of hours.

When the timer is set to 6, for instance, the system stops after six hours.

STEP 2: Set the OPERATION SELECTOR knob to TIMER OFF.

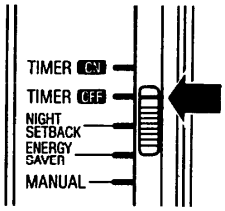

STEP 3: Press the OPERATION ON/OFF button. The TIMER lamp will light.

B. TIMER ON Mode

The system starts after the set hours have elapsed.

STEP 1: Set the TIMER SET knob to the desired number of hours.

When the timer is set to 6, for instance, the system starts after six hours.

STEP 2: Set the OPERATION SELECTOR knob to TIMER ON.

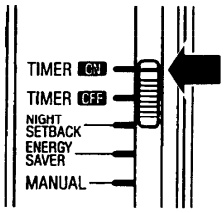

STEP 3: Press the OPERATION ON/OFF button. The TIMER lamp will light.

Power failure during timer operation

If power failure occurs, the time counted up to that point will become void. After the power is applied, the timer newly starts counting at the set time.

Downloaded from www.Manualslib.com manuals search engine

5. Adjusting the Air Flow Direction

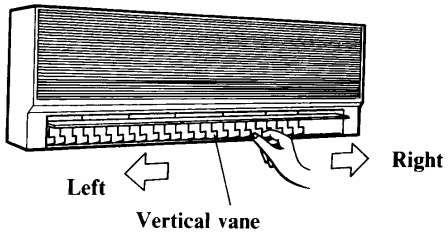

A. Horizontal

The horizontal air flow can be adjusted by moving the vertical vane to the left or right.

B. Vertical

Hold both ends of the flap and move the flap up and down to adjust the vertical air flow.

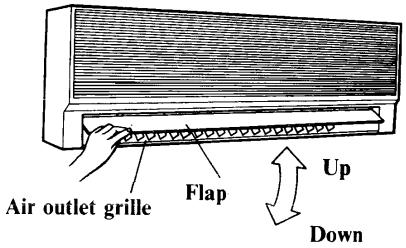

Recommended flap positions:

COOLING

- Be sure to set the flap within zone "A".

NOTE

- **If the flap is set within zone "B", condensation may form near the air outlet grille and drip onto the floor.**

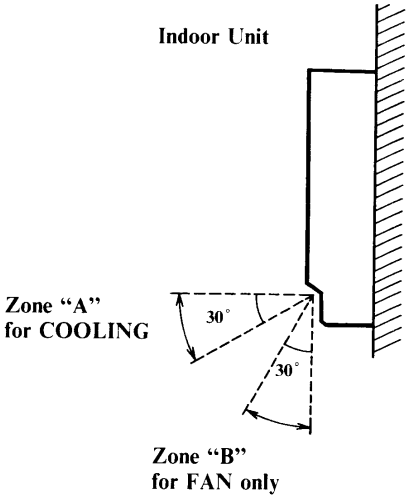

Downloaded from www.Manualslib.com manuals search engine

Care and Cleaning

24KL12W

For safety's sake, be sure to turn the air conditioner off and also disconnect it from the power mains before cleaning it.

Casing and Grille (Indoor Unit)

Clean the casing and grille of the indoor unit with a vacuum cleaner brush, or wipe them with a clean soft cloth.

If these parts are stained, use a clean cloth moistened with a mild liquid detergent.

When cleaning the grille, be careful so as not to force the vanes out of place.

CAUTION

1. Do not pour water on the unit to clean it. This will damage the internal components and cause an electric shock hazard.
2. Never use solvents, or harsh chemicals. Do not wipe the plastic casing using very hot water.

Outdoor Unit

CAUTION

1. Certain metal edges and the condenser fins are sharp and may cause injury if handled improperly; special care should be taken when you clean these parts.
2. Periodically check the outdoor unit to see if the air outlet or air intake are clogged with dirt or soot.
3. The evaporator and other components of the outdoor unit must also be cleaned periodically. Consult your dealer or service shop.

Air Filter

The air filter behind the air intake grille should be checked and cleaned at least once every two weeks.

How to remove the filter

1. Place the flap on the air outlet grille in the bottom-most position.
2. Grasp the air filter by the tab at the bottom, and pull downward.

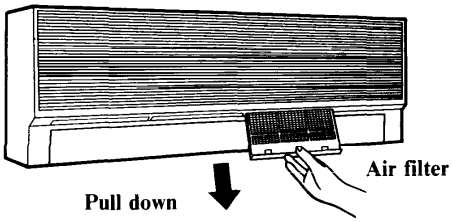

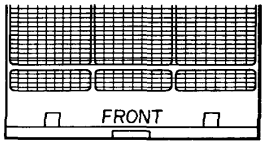

Use a vacuum cleaner to remove light dust. If there is sticky dust on the filter, wash the filter in lukewarm, soapy water, rinse it in clean water, and dry it.

When replacing the filter, check that the FRONT mark is facing you.

Downloaded from www.Manualslib.com manuals search engine

Naming of Parts

SAP243TCL

This air conditioner consists of an indoor unit and an outdoor unit.

Air Intake
The return air in the room is drawn into this section and passes through air filters which remove dust and foreign particles.

Air Outlet
By changing the orientation of the flap (MANUAL) and vertical blades (AUTOMATIC), air flow can be oriented to any desired direcdtion.

Control Unit
The remote control unit contains control switches for power ON/OFF, operation mode selection, temperature adjustment, and fan speed.

Refrigerant Tubes
The indoor and outdoor units are connected by copper tubes through which refrigerant gas flows.

Drain Pipe
Moisture in the room is condensed and drained off by means of this pipe.

Outdoor (Condensing) Unit
The outdoor unit contains the compressor, fan, heat exchanger coil, and other components.

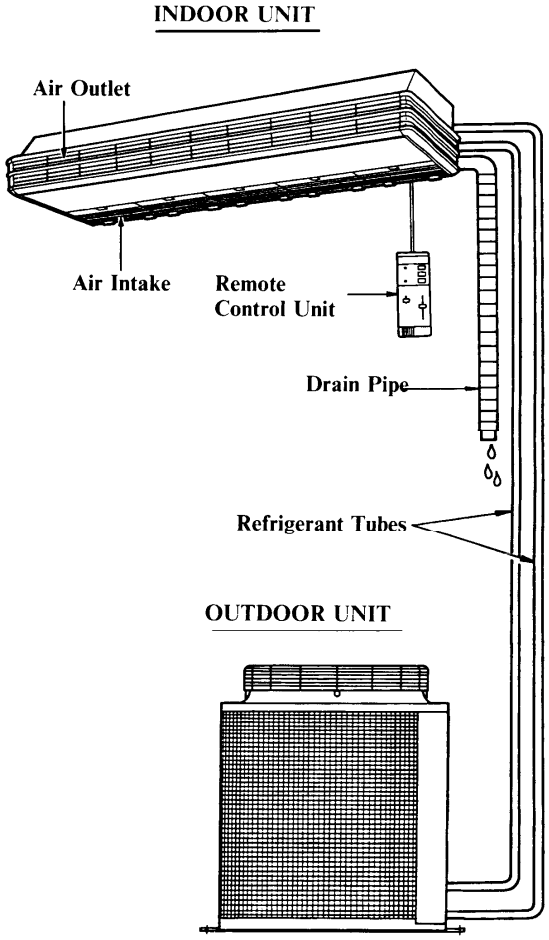

Downloaded from www.Manualslib.com manuals search engine

Controls and Indicators

SAP243TCL

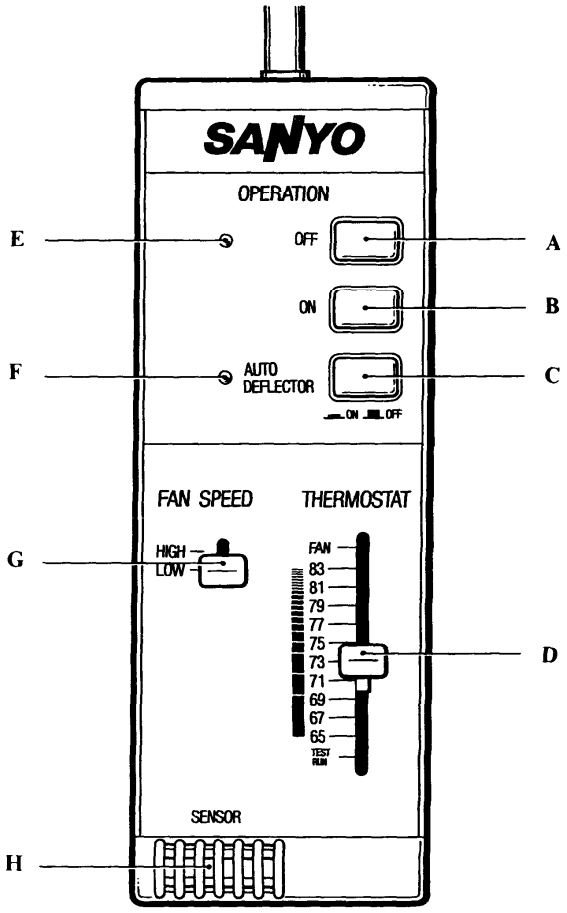

A. OPERATION OFF
Press this button to stop the air conditioner.

B. OPERATION ON
Press this button to start the the air conditioner.

C. AUTO DEFLECTOR SWITCH
To start automatic air sweep, press the AUTO DEFLECTOR button.
To stop, press the button again.

D. THERMOSTAT AND SERVICE TEST RUN SWITCH
This autmatically turns the air conditioner on and off to keep the room at a comfortable temperature. The lower the number you select, the cooler the room will be.
TEST RUN is to be used by the contractor for test operation. *So, DO NOT set knob at the test run position.*

E. OPERATION LAMP
This lamp lights when the system is in operation.

F. AUTO DEFLECTOR LAMP
This lamp lights when air sweep function is operating.

G. FAN SPEED
Use this control to select the desired fan speed.

HIGH	High speed
LOW	Low speed

H. SENSOR
The sensor detects any change in the room temperature.

Downloaded from www.Manualslib.com manuals search engine

Operation

SAP243TCL

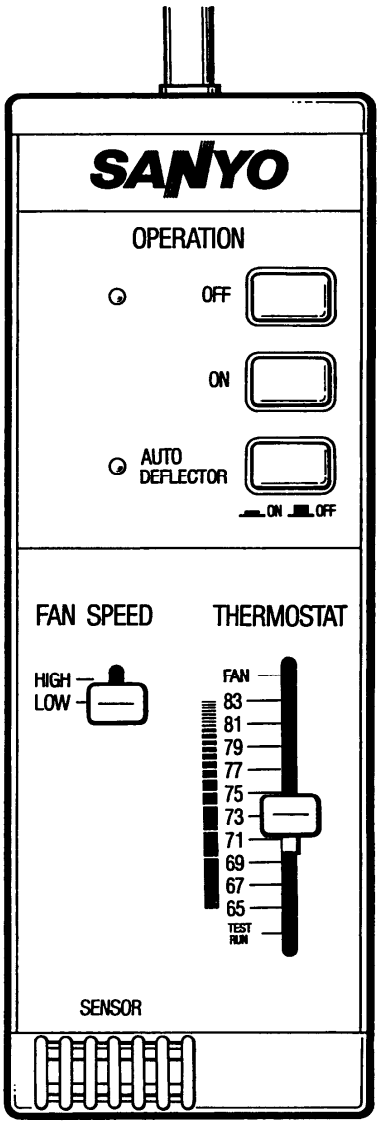

COOLING

STEP 1: Set the THERMOSTAT to the desired temperature.

STEP 2: Set the FAN SPEED.

STEP 3: Press the OPERATION ON button.

STEP 4: *To stop the air conditioner*, press the OPERATION OFF button.

NOTE

To protect the compressor from overloading, a 3-minute time delay circuit is built into the air conditioner. The compressor starts running after 3 minutes when the operation ON button is pressed.

NOTE

The following explanation is applicable only to low ambient temperature model, the model number of which ends in ..L, such as SAP243TCL.

Operation at low ambient temperature

When the ambient temperature is extremely low such as in winter, or if the ambient temperature is low and a strong wind is blowing, the air conditioner may stop and start repetitively for several minutes. This is because of the operation of the protection unit which prevents the air conditioner from freezing.

Downloaded from www.Manualslib.com manuals search engine

ADJUSTING THE AIR FLOW DIRECTION

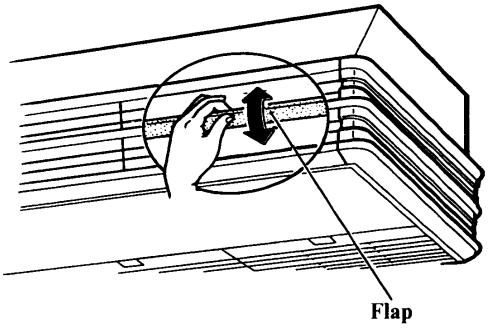

1. Horizontal

- Right and left adjustment (Automatic)

Variable mode

Press the AUTO DEFLECTOR pushbutton to start automatic air sweep. AUTO DEFLECTOR lamp lights during operation.

Fixed mode

To select a fixed air direction, press the pushbutton again when the air is flowing in the desired direction. The lamp will go out at this time.

2. Vertical

Hold both ends of the flap and move the flap up and down to adjust the vertical air flow.

Downloaded from www.Manualslib.com manuals search engine

Care and Cleaning

SAP243TCL

For safety's sake, be sure to turn the air conditioner off and also disconnect it from the power mains before cleaning it.

Casing and Grille (Indoor Unit)

Clean the casing and grille of the indoor unit with a vacuum cleaner brush, or wipe them with a clean soft cloth.

If these parts are stained, use a clean cloth moistened with a mild liquid detergent.

When cleaning the grille, be careful so as not to force the vanes out of place.

CAUTION

1. Do not pour water on the unit to clean it. This will damage the internal components and cause an electric shock hazard.
2. Never use solvents, or harsh chemicals. Do not wipe the plastic casing using very hot water.

Outdoor Unit

CAUTION

Certain metal edges and the condenser fins are sharp and may cause injury if handled improperly; special care should be taken when you clean these parts.

Periodically check the outdoor unit to see if the air outlet or air intake are clogged with dirt or soot.

The internal coil and other components of the outdoor unit must also be cleaned periodically. Consult your dealer or service shop.

Air Filter

The air filter behind the air intake grille should be checked and cleaned in every two weeks.

How to remove the filter

- **REMOVING THE AIR FILTERS**

Air filters are mounted behind the air-intake grille. Push the tab forward to swing the grille down. Then remove the air filter.

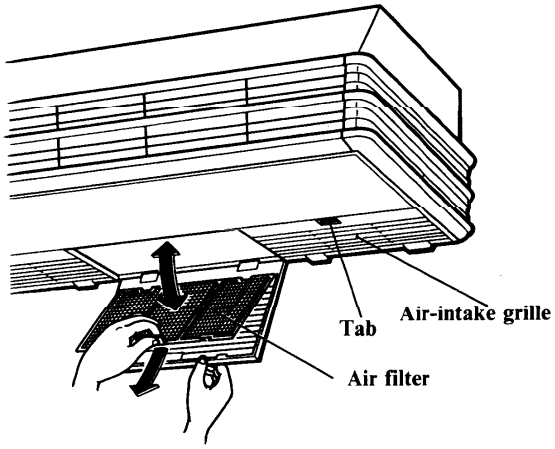

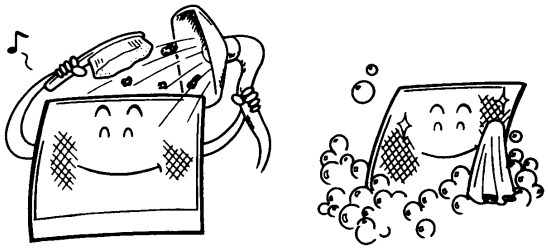

Use a vacuum cleaner to remove light dust. If there is sticky dust on the filter, wash the filter in lukewarm, soapy water, rinse it in clean water, and dry it.

Downloaded from www.Manualslib.com manuals search engine

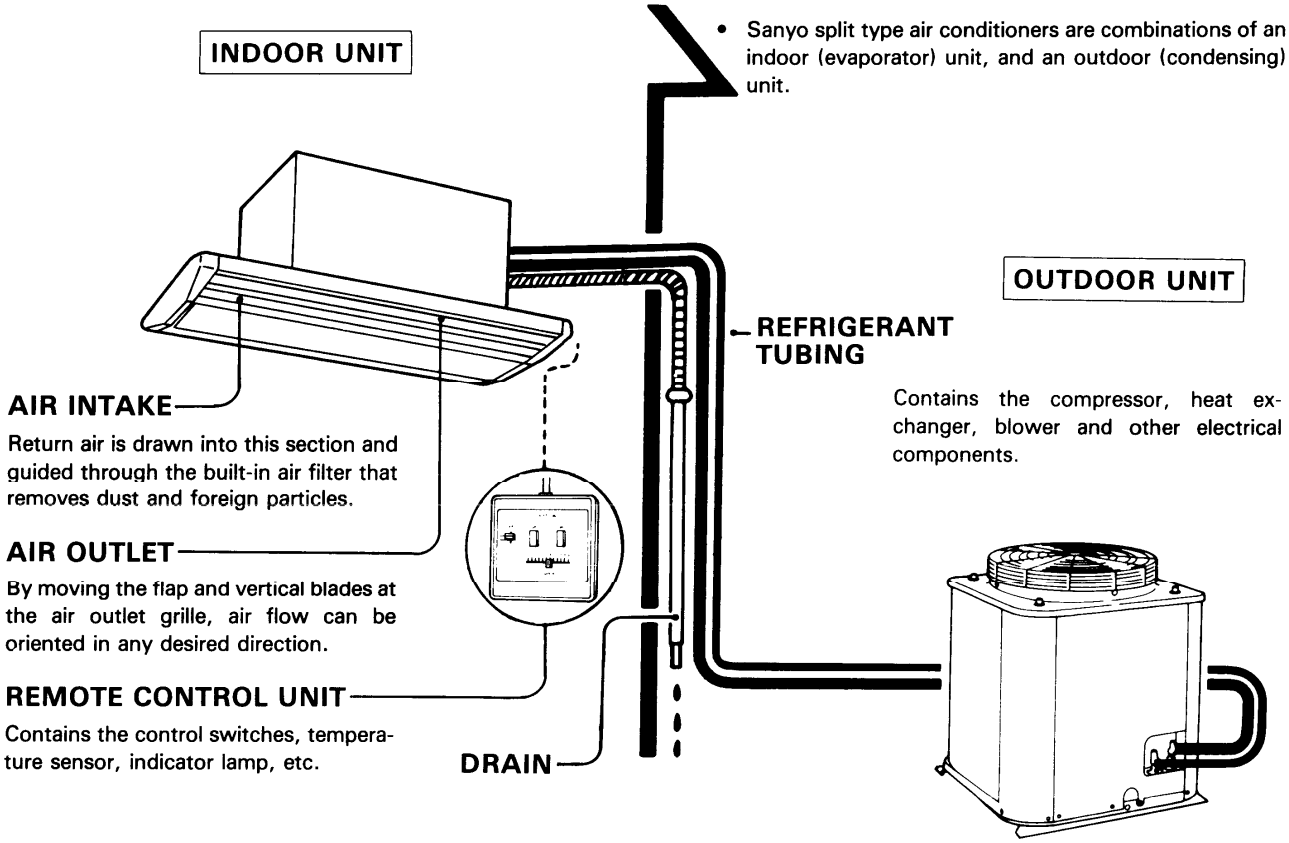

1. REMOTE CONTROL UNIT

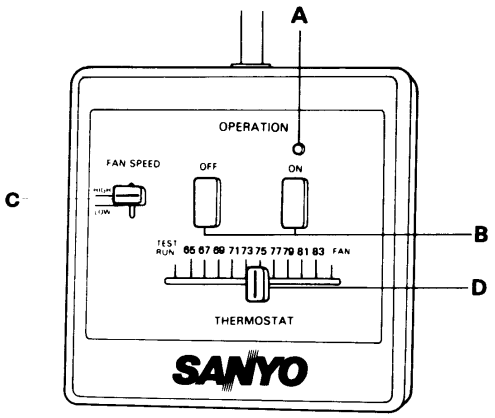

Note: If the lamp goes out and the air conditioner stops operating, refer to the section entitled "REMEDIES."

A. INDICATOR LAMP (Green)

This lamp lights up during fan only and cooling operation.

B. OPERATION SWITCH

OFF	Stops air conditioner.
ON	Starts air conditioner; bringing cooling, room air circulation and filtering dusts.

C. FAN SPEED SWITCH

HIGH	To operate the fan at high speed, set lever to HIGH position.
LOW	To operate the fan at low speed, set lever to LOW position.

D. THERMOSTAT, FAN AND TEST RUN SLIDE SWITCH

Downloaded from www.Manualslib.com manuals search engine

THERMOSTAT

The thermostat maintains the room temperature automatically at the desired level and ensures economical air conditioner operation. Just set the thermostat lever for the temperature level you want.

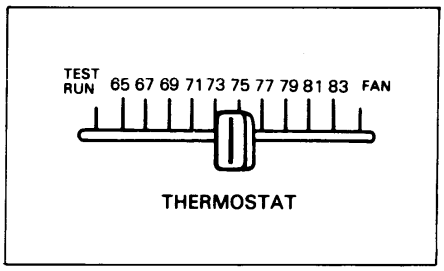

TEST RUN: This position is to be used for test operation only after installation or during service. Normally it should be locked.

FAN: Set thermostat lever to this position when FAN only operation is needed.

Note: The numbers on the graduated scale are meant to serve as a guideline only. The actual room temperature may differ from the thermostat setting depending on room size and the cooling load.

The following explanation is applicable only to low ambient temperature model, the model number of which ends in ..L, such as SAP243RCL.

Operation at low ambient temperature
When the ambient temperature is extremely low such as in winter, or if the ambient temperature is low and a strong wind is blowing, the air conditioner may stop and start repetitively for several minutes. This is because of the operation of the protection unit which prevents the air conditioner from freezing.

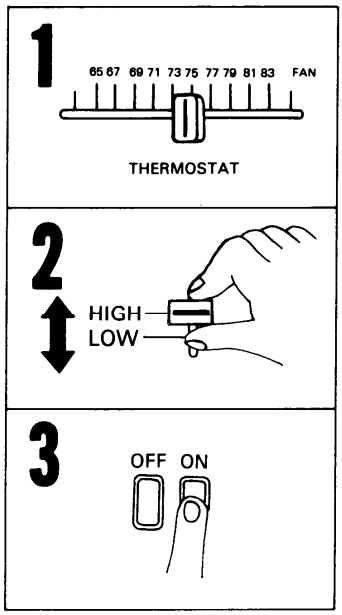

2. HOW TO OPERATE

Turn on the power supply disconnect at least five hours before starting the air conditioner.

1. Set THERMOSTAT lever to the desired position.
2. Set FAN SPEED selector lever to the desired position.
3. Press the ON button to start the air conditioner.

HOW TO STOP

Press the OFF button to stop the air conditioner.

EMERGENCY SHUTDOWN

If the air conditioner does not stop even when the OFF button is pressed, disconnect the power supply.

Downloaded from www.Manualslib.com manuals search engine

3. AIR FLOW DIRECTION ADJUSTMENT

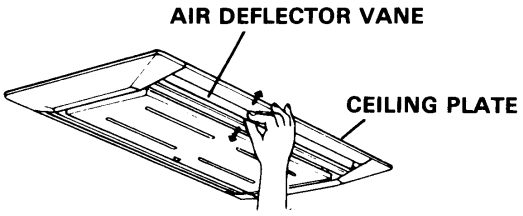

Air deflector vanes can be manually adjusted for the desired air distribution.

4. CAUTION

• SAFETY INTERVAL RESTARTING

After pressing the OFF button, the air conditioner stops and it will not start for three (3) minutes. To start the unit again after three minutes, press the ON button.

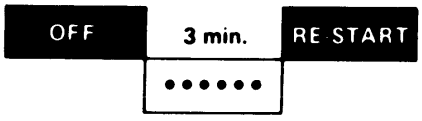

For extended life of the air conditioner, be sure to carry out minimal self-cleaning as shown below.

Never forget to press the "OFF" button and disconnect mains supply before maintaining or cleaning the unit.

1. CLEANING THE AIR FILTER

The air filter collects dust and other particles from the air and should be cleaned about once a week. If the filter gets blocked, the air conditioner's efficiency decreases greatly.

• REMOVING THE AIR FILTER

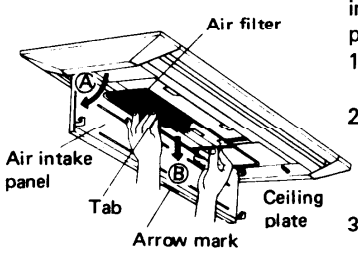

Air filter is located inside the air intake panel. To open the panel:

1. Grasp the panel at arrow-marked side.
2. Lift it slightly upward and then slide it toward the direction as arrow Ⓐ shows.
3. To remove the air filter, pick the filter tabs and pull them downwards (arrow Ⓑ).

• CLEANING

If only slightly soiled, a light dusting is sufficient. If heavily soiled, the filter should be washed in water of less than 104°F to prevent deformation.
To dry the air filter, shake off the water and then it dries naturally. Do not place it in direct sunlight.

2. CLEANING THE CEILING PLATE

The ceiling plate can be cleaned with a soft, dry cloth, or when heavily soiled, with a mild detergent. Always dry thoroughly and never use strong chemicals or thinners.

Do not use hot water at a temperature of 122°F or greater to wipe off dirt from the outside of the air conditioner.

3. OFF-SEASON MAINTENANCE

- After cooling or when the air conditioner has been unused for a long period of time set the "FAN" operation on a nice day and continue to operate the air conditioner in this manner for about half a day so as to dry out the internal components.
- Clean the air filter and replace it in the unit.
- Press the OFF pushbutton and disconnect the power supply disconnect.

Downloaded from www.Manualslib.com manuals search engine

9. FUNCTION

1) Temperature control 24KL12W

- Temperature control is obtained by cycling the compressor ON and OFF under control of the room temperature sensor in the remote control unit.
- The compressor turn to OFF below the thermostat setting temperature, and turn to ON above 1°F from setting temperature.

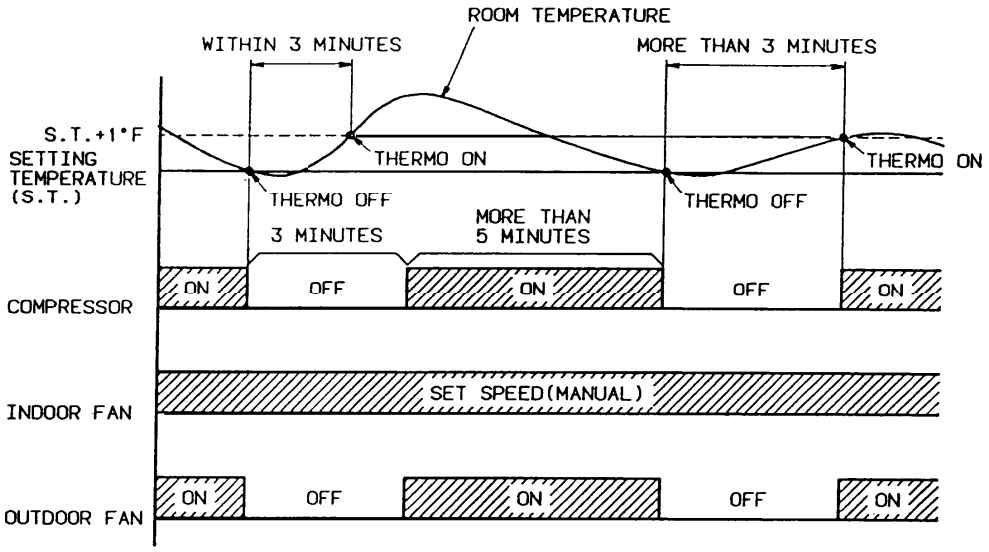

- In order to keep the compressor from stalling out when trying to start against the hight side refrigerant pressure, the control circuit has a built-in automatic time delay to allow the internal pressure to equalize. The control circuit will not try to start the compressor until it has been off for three (3) minutes.
- The compressor keep to turn forced for five (5) minutes, but the operation button is set to OFF, the compressor stop to turn.
- The compressor is not controlled by thermostat while the compressor run within five (5) minutes, or stop to run within three (3) minutes.

Downloaded from www.Manualslib.com manuals search engine

2) Freeze prevention 24KL12W

If the indoor coil temperature falls below 32°F when the compressor has been turning for 10 minutes or more, the controller signals to stop turning to the compressor and outdoor fan.
The compressor and outdoor fan motor will start to turn after 6 minutes.

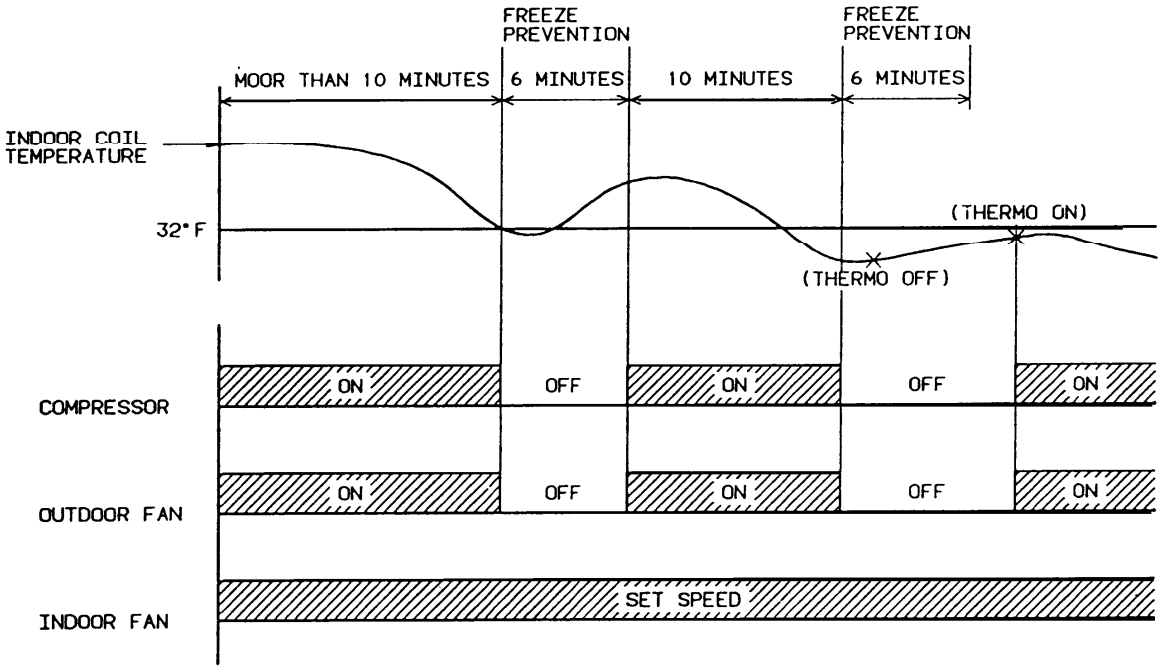

Downloaded from www.Manualslib.com manuals search engine

3) Function at Low Ambient Temperature

(a) When the outdoor temperature drops to 76°F or lower, the outdoor fan speed is switched to Low.
(b) When the outdoor temperature is below 54.5°F, the outdoor fan speed is changed from Low to adjustment.
(c) When heat exchanger temperature is above 145°F, the outdoor fan speed is high.
(d) Fan motor rotation changes within an oblique line under outdoor air temperature condition and indoor air temperature condition.

Rotation speed of the outdoor fan

In case of : 230V - 60Hz
Room temperature 67°F DB/57°F WB
Indoor fan Low speed

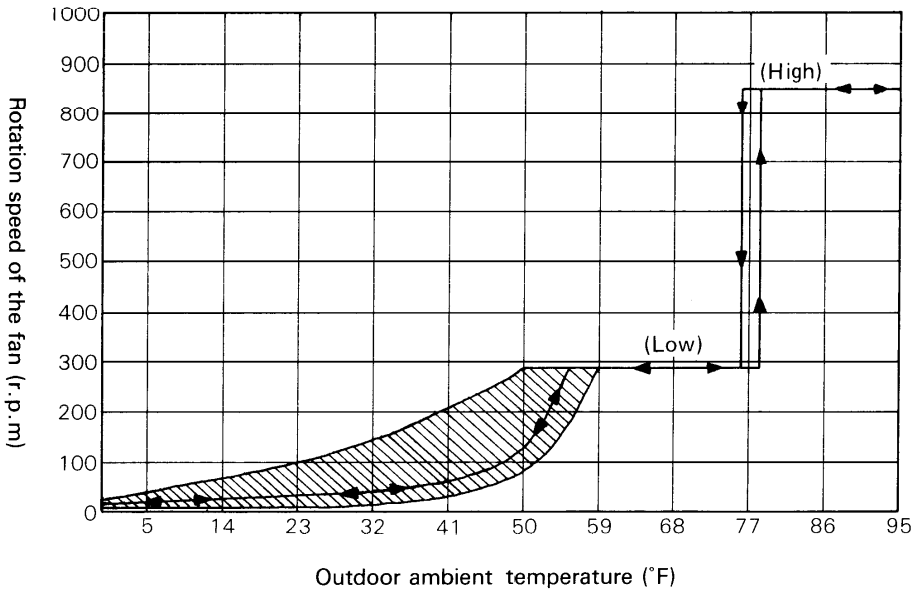

Downloaded from www.Manualslib.com manuals search engine

10. INSTALLATION INSTRUCTIONS

1) **Installation Site Selection**

Indoor Unit

AVOID:

- areas where leakage of flammable gas may be expected.
- places where large amounts of oil mist exist.
- direct sunlight.
- nearby heat sources that may affect performance of the unit.
- locations where remote control will be splashed with water or affected by dampness or humidity.
- installing remote control unit behind curtains or furniture that obstruct air circulation.

DO:

- select an appropriate position from which every corner of the room can be uniformly cooled. (High on the wall is best.)
- select a location that will hold the weight of the unit.
- select a location where tubing and drain pipe have shortest run to the outside.
- allow room for operation and maintenance as well as unrestricted air flow around the unit.
- install unit within the maximum height (H) up or down of outdoor unit and within a total tubing length (L) from outdoor unit stipulated in **Table-1** . Fig. 2
- allow room for mounting control unit about 1 m (4 ft.) off the floor, in an area that is not in direct sunlight or in the flow of cool air from the unit.

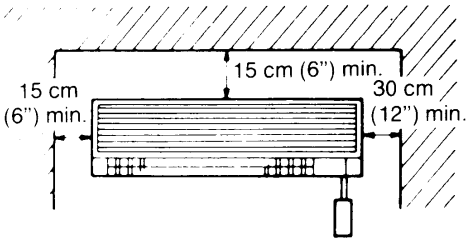

KL2412W

Fig. 1

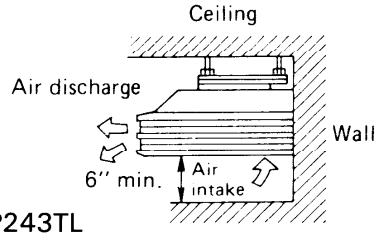

SAP243TL

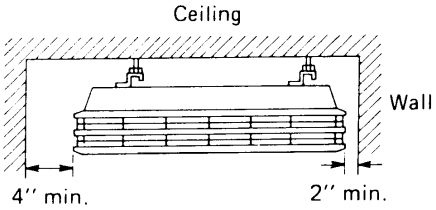

Fig. 1-a

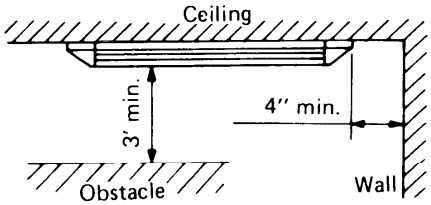

SAP243RL

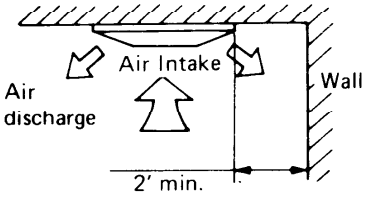

Fig. 1-b

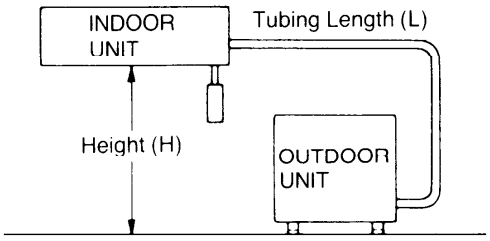

Fig. 2

Max. allowable tubing length at shipment (ft)	Limit of tubing length (L) (ft)	Limit of elevation difference (H) (ft)	Required amount of additional refrigerant* (oz/ft)	Refrigerant amount charged at shipment (lb)
10 ~ 50	100	50	0.38	6.8

* No additional charge of compressor oil is required.

Table 1

Downloaded from www.Manualslib.com manuals search engine

Outdoor Unit

AVOID:

- heat sources, exhaust fans, etc. Fig. 3.
- damp, humid or uneven locations.

DO:

- choose a place that is well ventilated and outside air temperature does not exceed 115°F constantly.
- allow enough room around unit for air intake/exhaust and possible maintenance. Fig. 4
- provide a solid base; concrete, about 4" above ground level to reduce humidity and awoid possible water damage in unit and decreased service life.
- use leg bolts or equal to bolt down unit, reducing vibration and noise.

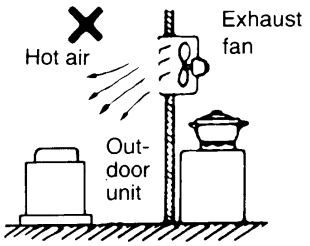

Fig. 3

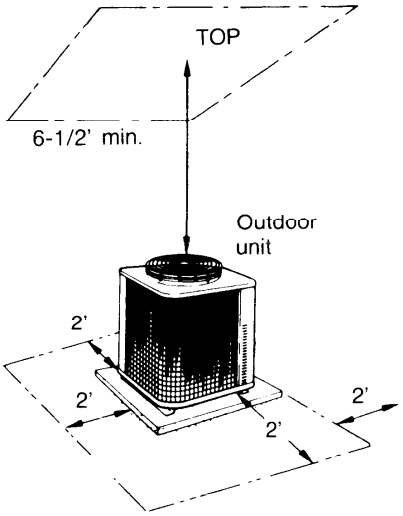

Fig. 4

Unit Installation in Areas of Heavy Snowfall or Extreme Cold

a) In heavy snowfall areas do not locate the outdoor unit where drifting will occur. A platform (unit foundation) should be set higher than the highest level of snowfall.

b) When installed in extreme cold areas, the unit should be located where cold winds do not blow directly into the outdoor unit coils.
If the unit coils can not be located away from cold winds, a baffle plate should be constructed. The size of a baffle plate is at least the same height and width as the unit coil, and the distance between the baffle plate and the coil is required at least 2 ft.

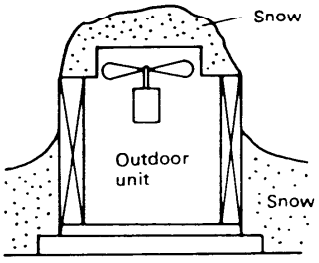

Fig. 5-A

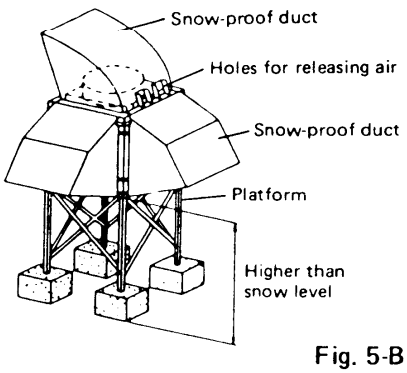

Fig. 5-B

Downloaded from www.Manualslib.com manuals search engine

2) **Connecting Tubes between Indoor and Outdoor Units**

1. Connect the indoor side refrigerant tubing extended from the wall with the outdoor side tubing tightly.

2. Flare nut on large dia. tube should be torqued to 520 ~ 560 lbs. in. Flare nut on the narrow tube should be torqued to 130 ~ 170 lbs. in. Fig. 6

3. After performing a leak test on the connecting part, insulate it with an insulation and finish with a vinyl masking tape over it. Fig. 7

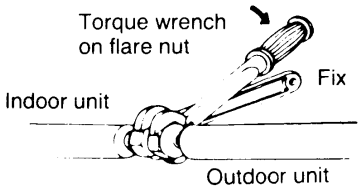

Fig. 6

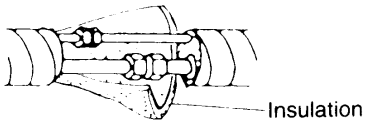

Fig. 7

3) **Insulation of Refrigerant Tubing**

To prevent heat loss and wet floors due to dripping of condensation, wide tube must be well insulated with proper insulation material. Thickness of insulation material should be min. 5/16". Fig. 8

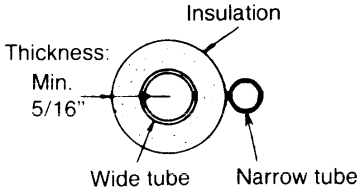

Fig. 8

4) Wiring Instructions

WIRING SYSTEM DIAGRAM

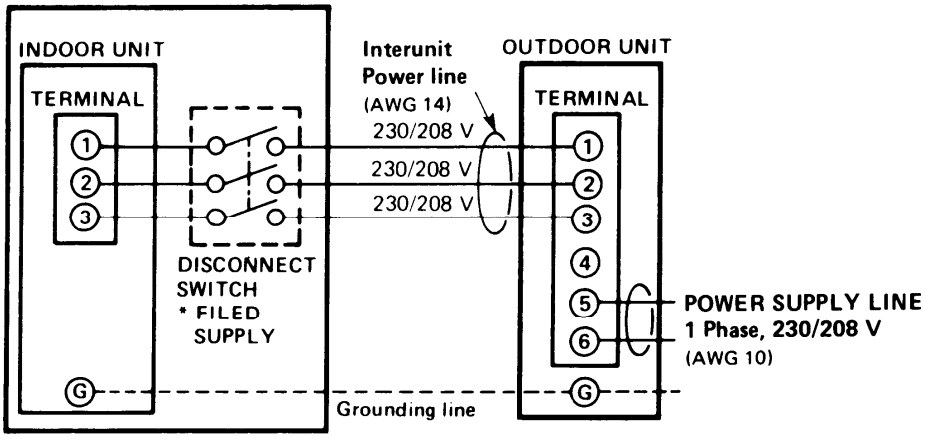

Downloaded from www.Manualslib.com manuals search engine

5) **Air Purging**

Air does not function as a refrigerant, because it can not be liquefied in the condenser. Air and moisture remaining in the refrigerant system have undesirable effects as indicated at right. Therefore, they must be purged completely.

1) The pressure in the system rises.
2) The operating current rises.
3) Cooling efficiency drops.
   Water contained in the air may freeze and block the capillary tube.
4) Water may lead to corrosion of parts in the refrigerant circuit.

CAUTION

Refrigerant has been factory charged in the outdoor unit at the time of shipment.
Don't use this refrigerant gas for air purging.

■ TUBING DIAGRAM FOR AIR PURGING

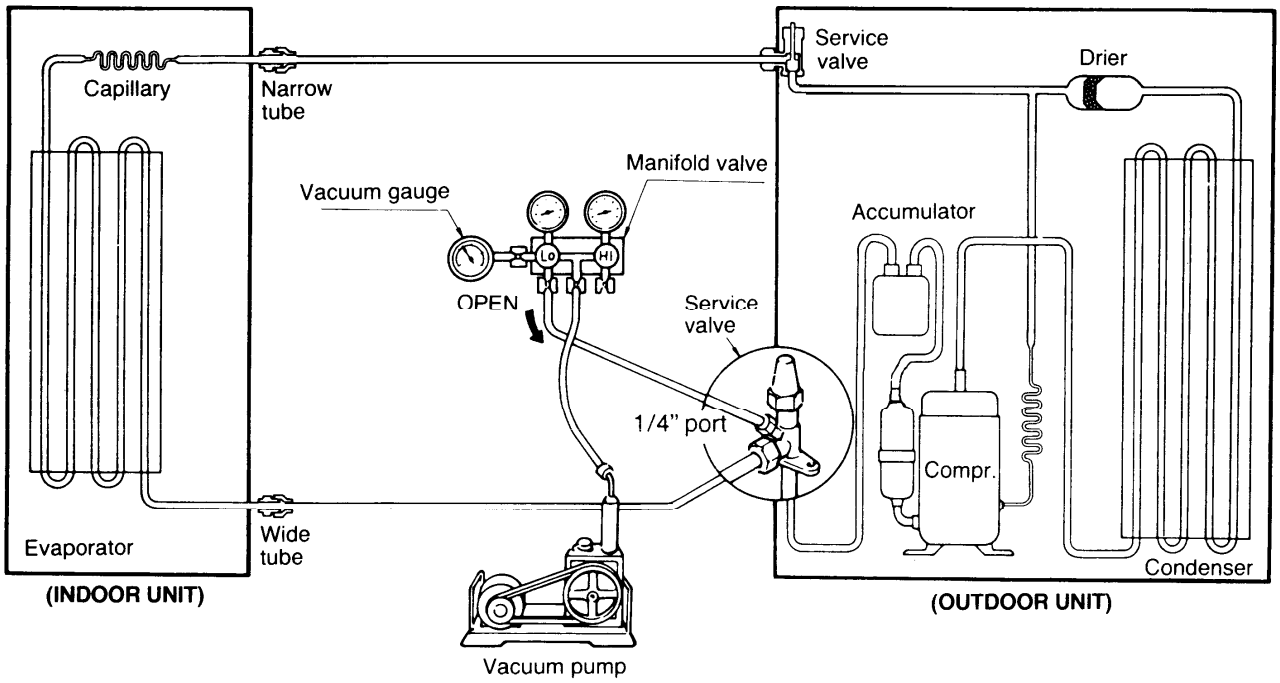

Fig.9

Downloaded from www.Manualslib.com manuals search engine

Air Purging Procedure (Conventional evacuation system)

a) Check gas leakage of all joints with liquid soap. Fig. 10

b) If no gas leakage is confirmed, Connect both vacuum pump and vacuum gauge to service valve through 1/4" port with a flare nut. See Fig. 35.

c) Next, run the vacuum pump until the pressure reaches to 1.5 mm Hg abs. or less value than that.

d) Close the low pressure side knob on the gauge manifold valve and stop evacuation.

e) Remove the cap from the wide tube service valve and turn the spindle gradually until it is back seated. Fig. 11

f) Disconnect vacuum pump and gauge manifold valve from the service valve. Then replace bonnet and flare nut to 1/4" port of service valve.

g) The spindle of narrow tube service valve shall be fully back seated. Then, tighten the valve seal cap with the copper gasket.

h) The all air purge procedure has been completed and the unit is ready for trial opeeration.

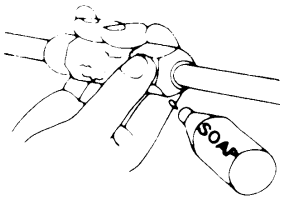

Fig. 10

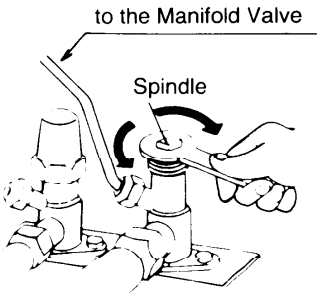

Fig. 11

Air Purging Procedure (If tubing length will not exceed more than 50 ft.)

a) Connect refrigerant charging cylinder to narrow tube service valve, and open the valve of the charging cylinder. Fig. 12

b) When gas begins to be expelled, stop the flow for about 5 seconds by holding your finger over the outlet, then remove it and allow gas to flow out freely for about 10 seconds.
Repeat this operation 6 times.

c) Tighten the flare nuts quickly with bonnets on both charging ports right after hold no pressure before air comes in.

d) The spindle of both sevice valve shall be fully back seated. then, tighten the valve seal cap with the copper gasket.

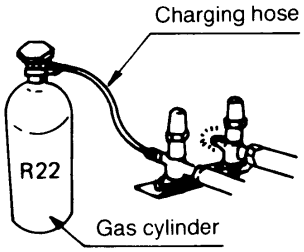

Fig. 12

Downloaded from www.Manualslib.com manuals search engine

■ SERVICE VALVE CONSTRUCTION

- **Valve Position -a-**
  The valve spindles of both wide & narrow tubes are turned all the way in. The unit is shipped from the factory in this position (Fig. 13-a)
- **Valve Position -b-**
  The valve spindles of both wide & narrow tubes are turned all the way out ("BACK SEAT" position). This is the normal operating position. (Fig. 13-b)
- **Valve Position -c-**
  The valve stems of both wide and narrow tubes are turned halfway-down position. This position is used for pressure measurement and gas charging. (Fig. 13-c)
- **Valve Position -d-**
  Like position -a-, but with the flare nut of wide tube open. This position is used for air purging. (Fig. 13-d)

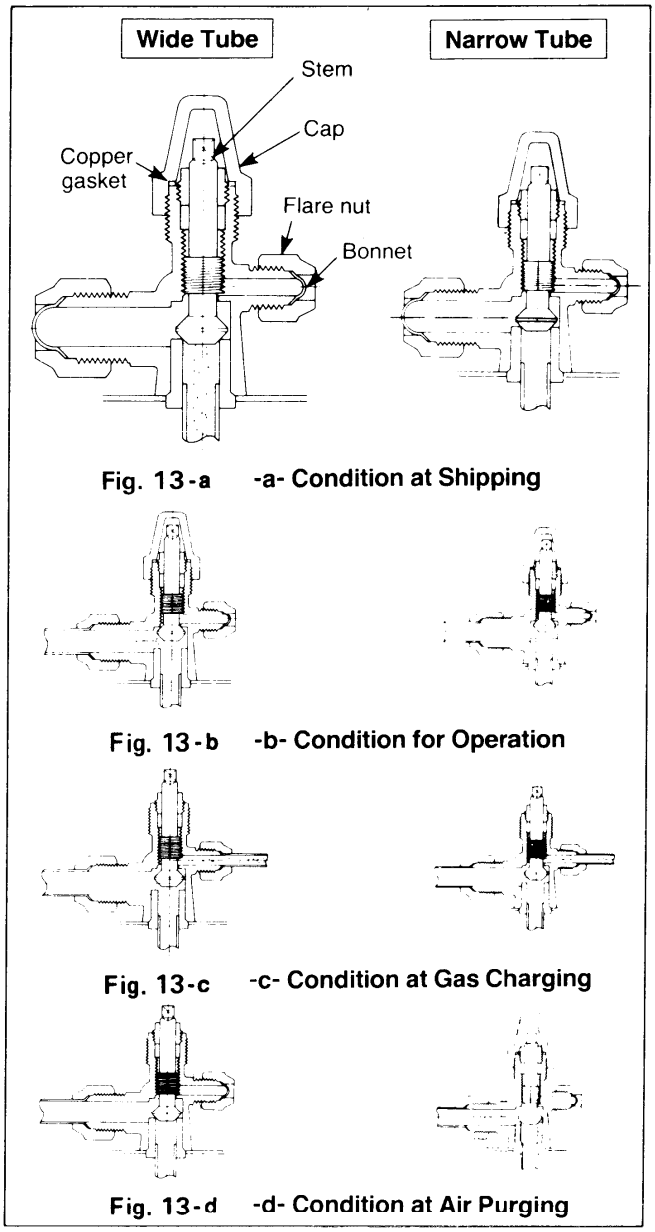

Fig. 13-a -a- Condition at Shipping

Fig. 13-b -b- Condition for Operation

Fig. 13-c -c- Condition at Gas Charging

Fig. 13-d -d- Condition at Air Purging

CAUTION

Be sure to use the service valve wrench or ratchet wrench when opening or closing the shut-off valve spindle.

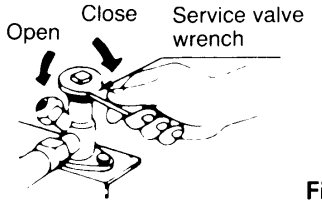

Fig. 14

■ PUMP DOWN

Pump down means collecting all refrigerant in the system back into the outdoor unit without losing refrigerant gas. Pump down is used when unit is moved or for servicing the refrigerant circuit.

1) Close valve on wide tube halfway (2 turns).
2) Close valve on narrow tube all the way (4 turns).
3) Turn unit on (cooling) for approximately 3 minutes then shut off.
4) Close valve on wide tube all the way (2 additional turns).
5) Disconnect tubes slowly allowing pressure to equalize inside and out.
6) When tubing is disconnected provide dust covers for both valves and tubes until unit is reconnected.

Downloaded from www.Manualslib.com manuals search engine

6) Test Run

Check that all tubing and wiring have been completed correctly. Check again that wide and narrow tube service valves are fully opened. Turn on power and run the unit.

NOTE :

If the room temperature is too low, cooling operation may not be possible even if the thermostat knob is set at the lowest position.

In this event, perform test run as follows:

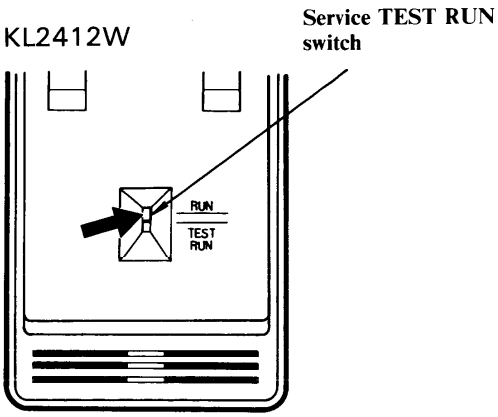

(Bottom)

Remote control unit viewed from the rear

Fig. 15

24KL12W

Service TEST RUN switch (recessed*)

The Service TEST RUN switch is located at the rear bottom of the remote control unit. It is used for servicing the air conditioner. Do not touch it, therefore. *During normal operation,this switch must be set in the RUN position.* If the air conditioner is used with the switch in the TEST RUN position, it will not operate normally. Fig. 15.

SAP243TL and SAP243RL

a) Pull off the thermostat knob. Fig. 16. and 18.

b) Set the thermostat lever to the TEST RUN position. Fig. 17. and 19.

c) Press OPERATION "ON" button to start the air conditioner.

d) After completion of test run, press "OFF" button to stop the unit.

e) Reinstall the thermostat knob. (The stopper position facing down.)

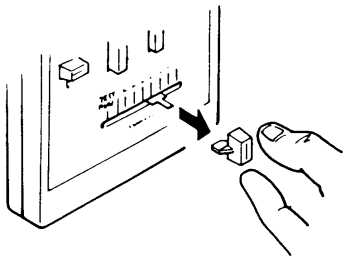

Fig. 16

SAP243RL

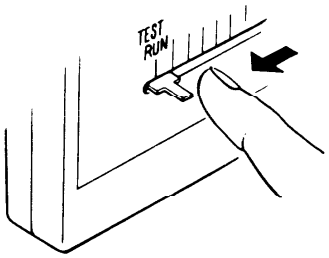

Fig. 17

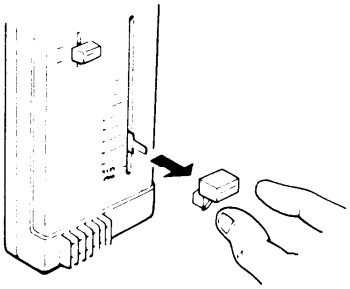

Fig. 18

SAP243TL

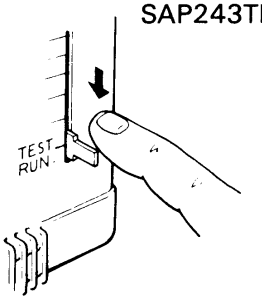

Fig. 19

Downloaded from www.Manualslib.com manuals search engine

11. REFRIGERANT FLOW DIAGRAM

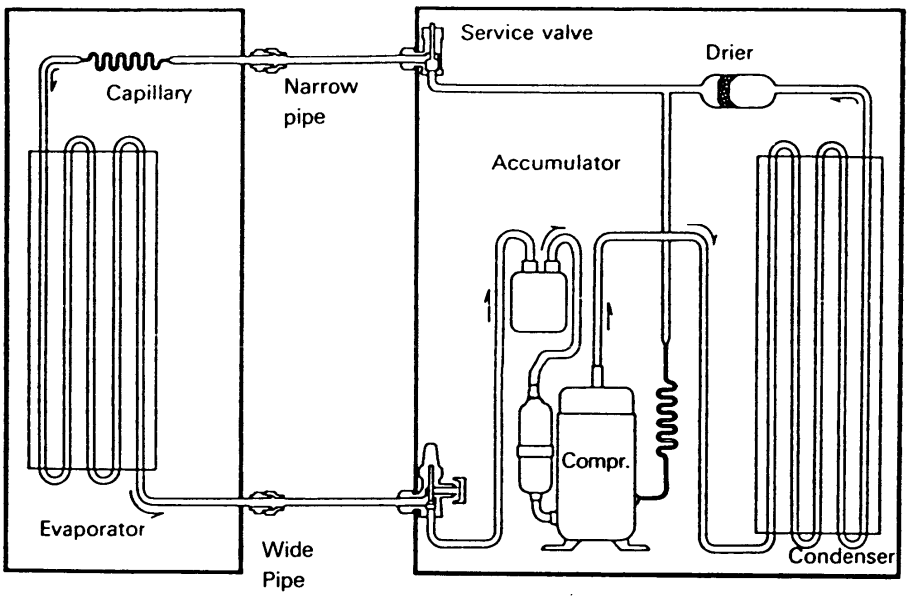

(INDOOR UNIT) (OUTDOOR UNIT)

Downloaded from www.Manualslib.com manuals search engine

12. ELECTRICAL DATA

- Schematic Diagram

24KL12W

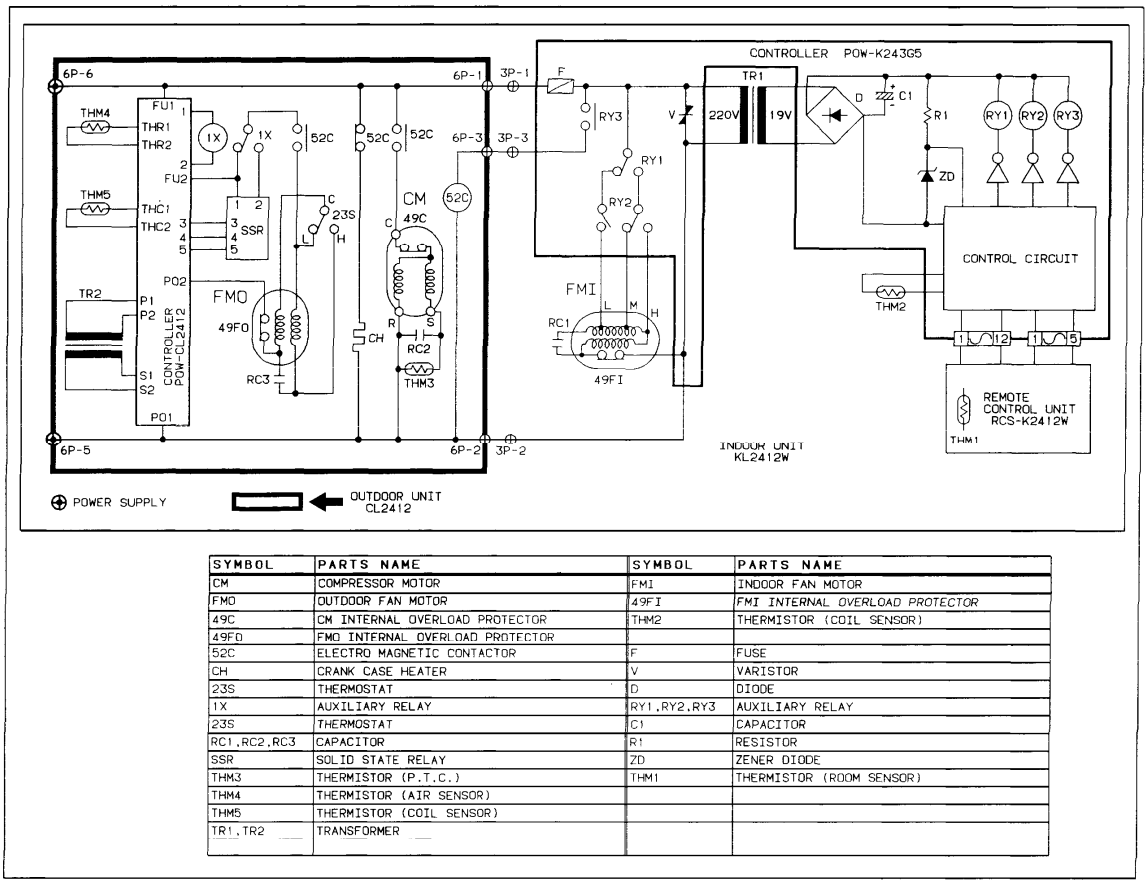

SYMBOL	PARTS NAME	SYMBOL	PARTS NAME
CM	COMPRESSOR MOTOR	FMI	INDOOR FAN MOTOR
FMO	OUTDOOR FAN MOTOR	49FI	FMI INTERNAL OVERLOAD PROTECTOR
49C	CM INTERNAL OVERLOAD PROTECTOR	THM2	THERMISTOR (COIL SENSOR)
49FO	FMO INTERNAL OVERLOAD PROTECTOR		
52C	ELECTRO MAGNETIC CONTACTOR	F	FUSE
CH	CRANK CASE HEATER	V	VARISTOR
23S	THERMOSTAT	D	DIODE
1X	AUXILIARY RELAY	RY1,RY2,RY3	AUXILIARY RELAY
23S	THERMOSTAT	C1	CAPACITOR
RC1,RC2,RC3	CAPACITOR	R1	RESISTOR
SSR	SOLID STATE RELAY	ZD	ZENER DIODE
THM3	THERMISTOR (P.T.C.)	THM1	THERMISTOR (ROOM SENSOR)
THM4	THERMISTOR (AIR SENSOR)		
THM5	THERMISTOR (COIL SENSOR)		
TR1,TR2	TRANSFORMER		

Downloaded from www.Manualslib.com manuals search engine

- Schematic Diagram

SAP243TCL

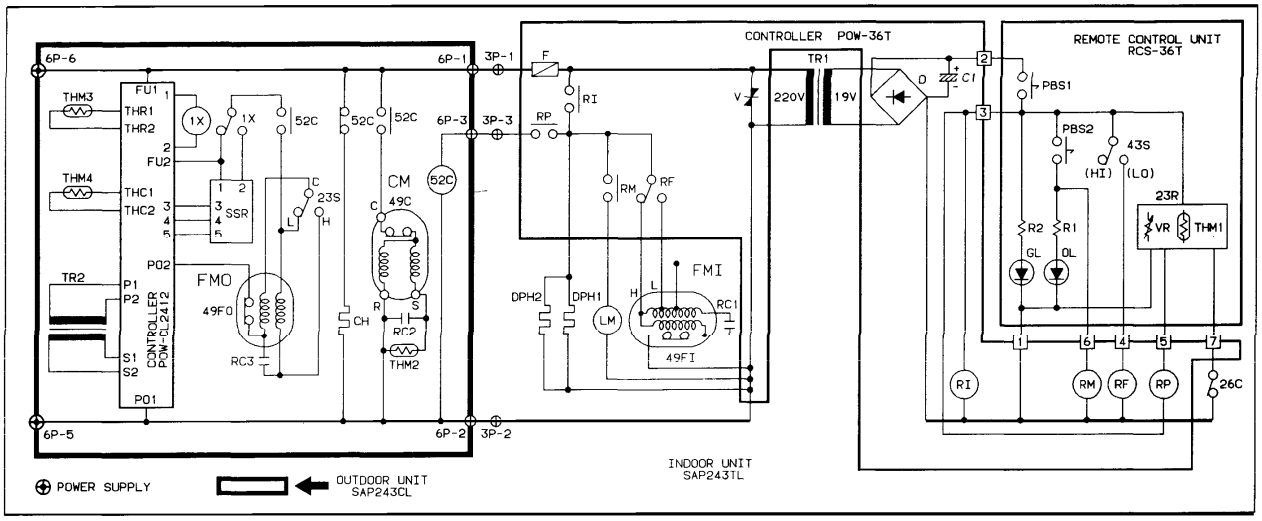

SYMBOL	PARTS NAME	SYMBOL	PARTS NAME
CM	COMPRESSOR MOTOR	FMI	INDOOR FAN MOTOR
FMO	OUTDOOR FAN MOTOR	49FI	FMI INTERNAL OVERLOAD PROTECTOR
49C	CM INTERNAL OVERLOAD PROTECTOR	DPH1,DPH2	DEW PROOF HEATER
49FO	FMO INTERNAL OVERLOAD PROTECTOR	26C	FREEZE PROTECTION THERMOSTAT
52C	ELECTRO MAGNETIC CONTACTOR	F	FUSE
CH	CRANK CASE HEATER	V	VARISTOR
23S	THERMOSTAT	D	DIODE
1X	AUXILIARY RELAY	RI,RM,RF,RP	AUXILIARY RELAY
RC1,RC2,RC3	CAPACITOR	C1	CAPACITOR
SSR	SOLID STATE RELAY	R1,R2	RESISTOR
THM2	THERMISTOR (P.T.C.)	GL,OL	INDICATOR LAMP
THM3	THERMISTOR (AIR SENSOR)	PBS1,PBS2	PUSH BUTTON SWITCH
THM4	THERMISTOR (COIL SENSOR)	43S	FAN SPEED SELECTOR SWITCH
		23R	ROOM THERMOSTAT
TR1,TR2	TRANSFORMER	THM1	THERMISTOR
LM	AUTO DEFLECTOR MOTOR	VR	VARIABLE RESISTOR

Downloaded from www.Manualslib.com manuals search engine

- Schematic Diagram

SAP243RCL

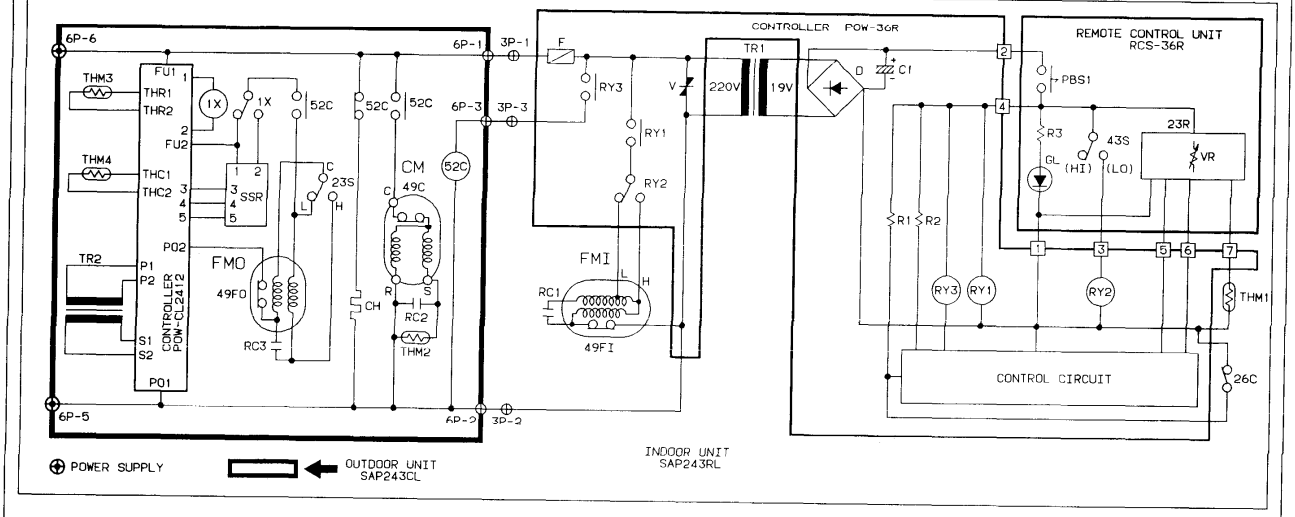

SYMBOL	PARTS NAME	SYMBOL	PARTS NAME
CM	COMPRESSOR MOTOR	FMI	INDOOR FAN MOTOR
FMO	OUTDOOR FAN MOTOR	49FI	FMI INTERNAL OVERLOAD PROTECTOR
49C	CM INTERNAL OVERLOAD PROTECTOR	THM1	THERMISTOR (ROOM SENSOR)
49FO	FMO INTERNAL OVERLOAD PROTECTOR	26C	FREEZE PROTECTION THERMOSTAT
52C	CLECTRO MAGNETIC CONTACTOR	F	FUSE
CH	CRANK CASE HEATER	V	VARISTOR
23S	THERMOSTAT	D	DIODE
1X	AUXILIARY RELAY	RY1,RY2,RY3	AUXILIARY RELAY
RC1,RC2,RC3	CAPACITOR	C1	CAPACITOR
SSR	SOLID STATE RELAY	R1,R2,R3	RESISTOR
THM2	THERMISTOR (P.T.C.)	GL	INDICATOR LAMP
THM3	THERMISTOR (AIR SENSOR)	PBS1	PUSH BUTTON SWITCH
THM4	THERMISTOR (COIL SENSOR)	43S	FAN SPEED SELECTOR SWITCH
TR1,TR2	TRANSFORMER	23R	ROOM THERMOSTAT
		VR	VARIABLE RESISTOR

Downloaded from www.Manualslib.com manuals search engine

Electrical Wiring Diagram (P. C. B. Ass'y) 24KL12W

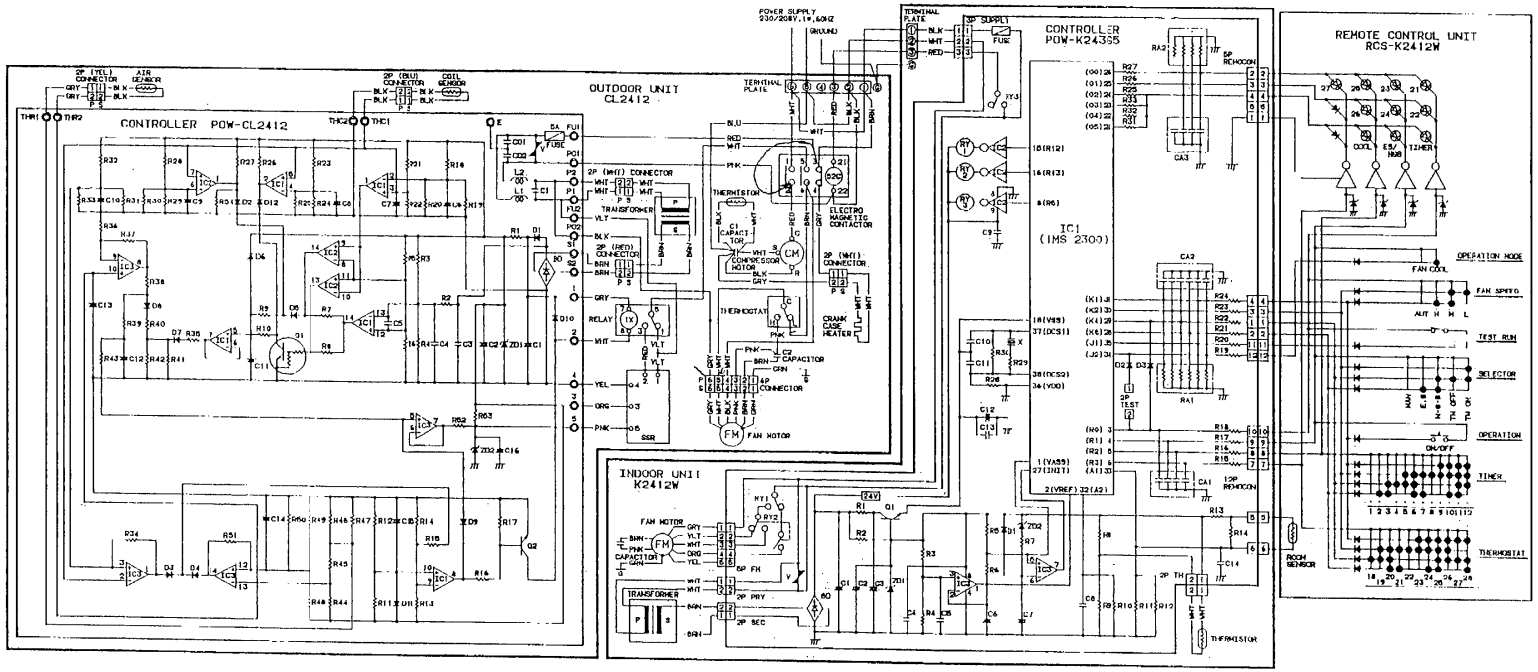

Downloaded from www.Manualslib.com manuals search engine

POW-CL2412

SYMBOLS	DESCRIPTION	SPECIFICATIONS
R1	RESISTOR	240Ω 2W ±5%
R2	RESISTOR	5.6KΩ 1/4W ±5%
R3	RESISTOR	18KΩ 1/4W ±5%
R4	RESISTOR	3.3KΩ 1/4W ±5%
R5	RESISTOR	22KΩ 1/4W ±5%
R6	RESISTOR	5.1KΩ 1/4W ±5%
R7	RESISTOR	22KΩ 1/4W ±5%
R8	RESISTOR	10KΩ 1/4W ±5%
R9	RESISTOR	910KΩ 1/4W ±5%
R10	RESISTOR	510KΩ 1/4W ±5%
R11	RESISTOR	150KΩ 1/4W ±5%
R12	RESISTOR	300KΩ 1/4W ±5%
R13	RESISTOR	5.6KΩ 1/4W ±5%
R14	RESISTOR	7.5KΩ 1/4W ±5%
R15	RESISTOR	1.2KΩ 1/4W ±5%
R16	RESISTOR	7.5KΩ 1/4W ±5%
R17	RESISTOR	2.2KΩ 1/4W ±5%
R18	RESISTOR	27KΩ 1/4W ±1%
R19	RESISTOR	3.6KΩ 1/4W ±1%
R20	RESISTOR	180KΩ 1/4W ±5%
R21	RESISTOR	22KΩ 1/4W ±1%
R22	RESISTOR	100KΩ 1/4W ±1%
R23	RESISTOR	27KΩ 1/4W ±1%
R24	RESISTOR	3KΩ 1/4W ±1%
R25	RESISTOR	39KΩ 1/4W ±5%
R26	RESISTOR	13KΩ 1/4W ±5%
R27	RESISTOR	13KΩ 1/4W ±5%
R28	RESISTOR	27KΩ 1/4W ±1%
R29	RESISTOR	4.7KΩ 1/4W ±1%
R30	RESISTOR	120KΩ 1/4W ±5%
R31	RESISTOR	1.5KΩ 1/4W ±1%
R32	RESISTOR	27KΩ 1/4W ±1%
R33	RESISTOR	36KΩ 1/4W ±5%
R34	RESISTOR	120KΩ 1/4W ±5%
R35	RESISTOR	560Ω 1/4W ±1%
R36	RESISTOR	6.1KΩ 1/4W ±1%
R37	RESISTOR	36KΩ 1/4W ±1%
R38	RESISTOR	1.5KΩ 1/4W ±1%
R39	RESISTOR	75KΩ 1/4W ±5%
R40	RESISTOR	750Ω 1/4W ±1%
R41	RESISTOR	300Ω 1/4W ±1%
R43	RESISTOR	100Ω 1/4W ±5%
R44	RESISTOR	15KΩ 1/4W ±1%
R45	RESISTOR	1.6KΩ 1/4W ±1%
R47	JUMPER	
R48	RESISTOR	5.6KΩ 1/4W ±1%
R49	RESISTOR	510Ω 1/4W ±1%
R50	RESISTOR	12KΩ 1/4W ±5%
R51	RESISTOR	200KΩ 1/4W ±5%
R52	RESISTOR	200Ω 1/4W ±5%

POW-CL2412

SYMBOLS	DESCRIPTION	SPECIFICATIONS
R53	RESISTOR	4.7KΩ 1/4W ±5%
R54	RESISTOR	75KΩ 1/4W ±5%
C1	CAPACITOR	470μF 50V
C2	CAPACITOR	22μF 25V
C3	CAPACITOR	473Z
C4	CAPACITOR	473Z
C5	CAPACITOR	223Z
C6	CAPACITOR	22μF 25V
C7	CAPACITOR	22μF 25V
C8	CAPACITOR	22μF 25V
C9	CAPACITOR	22μF 25V
C10	CAPACITOR	22μF 25V
C11	CAPACITOR	470MF 16V
C12	CAPACITOR	100μF 16V
C13	CAPACITOR	22μF 25V
C14	CAPACITOR	22μF 25V
C15	CAPACITOR	22μF 16V
C16	CAPACITOR	22μF 25V
CI	CAPACITOR	0.22μF 630V
CO1	CAPACITOR	3300PF 630V
CO2	CAPACITOR	3300PF 630V
D1	DIODE	DFS10C
D2	DIODE	DS446
D3	DIODE	DS446
D4	DIODE	DS446
D5	DIODE	DS446
D6	DIODE	DS446
D7	DIODE	DS446
D8	DIODE	DS446
D9	DIODE	DS446
D10	DIODE	DS446
D11	DIODE	DS446
BD	BRIDGE DIODE	DBA10C
ZD1	ZENER DIODE	GZB-12C
ZD2	ZENER DIODE	GZA6.2X
Q1	TRANSISTOR	2SC 3400
Q2	TRANSISTOR	2SC 2274 E
IC1	IC	NJM2902N
IC2	IC	LA6339
IC3	IC	NJM2902N
L1	FILTER COIL	SN12-500N
L2	FILTER COIL	SN12-500N
FUSE	FUSE	250V 5A
V	VARISTOR	SNR-14A420K

POW-K243G5

SYMBOLS	DESCRIPTION	SPECIFICATIONS
R1	RESISTOR	100Ω 1W ±5%
R2	RESISTOR	1.5KΩ 1W ±5%
R3	RESISTOR	30KΩ 1/4W ±1%
R4	RESISTOR	56KΩ 1/4W ±1%
R5	RESISTOR	1.5KΩ 1/4W ±1%
R6	RESISTOR	1.3KΩ 1/4W ±1%
R7	RESISTOR	56KΩ 1/4W ±5%
R8	RESISTOR	110KΩ 1/4W ±1%
R9	RESISTOR	200KΩ 1/4W ±1%
R10	RESISTOR	510KΩ 1/4W ±1%
R11	RESISTOR	15KΩ 1/4W ±1%
R12	RESISTOR	22KΩ 1/4W ±1%
R13	RESISTOR	180Ω 1/4W ±1%
R14	RESISTOR	7.5KΩ 1/4W ±5%
R15	RESISTOR	240Ω 1/4W ±5%
R16	RESISTOR	240Ω 1/4W ±5%
R17	RESISTOR	240Ω 1/4W ±5%
R18	RESISTOR	240Ω 1/4W ±5%
R19	RESISTOR	470Ω 1/4W ±5%
R20	RESISTOR	470Ω 1/4W ±5%
R21	RESISTOR	470Ω 1/4W ±5%
R22	RESISTOR	470Ω 1/4W ±5%
R23	RESISTOR	470Ω 1/4W ±5%
R24	RESISTOR	470Ω 1/4W ±5%
R25	RESISTOR	390Ω 1/4W ±5%
R26	RESISTOR	270Ω 1/2W ±5%
R27	RESISTOR	270Ω 1/2W ±5%
R28	RESISTOR	3.3KΩ 1/4W ±1%
R29	RESISTOR	100Ω 1/4W ±1%
R30	RESISTOR	56KΩ 1/4W ±1%
R31	RESISTOR	390Ω 1/4W ±5%
R32	RESISTOR	390Ω 1/4W ±5%
R33	RESISTOR	390Ω 1/4W ±5%
C1	CAPACITOR	470μF 50V
C2	CAPACITOR	10μF 50V
C3	CAPACITOR	22μF 50V
C4	CAPACITOR	223 50V
C5	CAPACITOR	223 50V
C6	CAPACITOR	1μF 50V
C7	CAPACITOR	10μF 50V
C8	CAPACITOR	223 50V
C9	CAPACITOR	223 50V
C10	CAPACITOR	270PF±10% 50V
C11	CAPACITOR	100PF±10% 50V
C12	CAPACITOR	22μF 16V
C13	CAPACITOR	472 50V
C14	CAPACITOR	104 50V

POW-K243G5

SYMBOLS	DESCRIPTION	SPECIFICATIONS
RA1	RESISTOR ARREY	56K 8BIT
RA2	RESISTOR ARREY	10K 4BIT
CA1	CAPACITOR ARRAY	472 4BIT
CA2	CAPACITOR ARRAY	472 6BIT
CA3	CAPACITOR ARRAY	102 4BIT
BD	BRIDGE DIODE	GBA10C
ZD1	ZENER DIODE	GZB9.1B
ZD2	ZENER DIODE	GZA2.4X
D1	DIODE	DS-442X
D2	DIODE	DS-442X
D3	DIODE	DS-442X
IC1	IC	THS2300 H52074
IC2	IC	LB 1234
IC3	IC	LA 6458D
Q1	TRANSISTOR	2SD313EF
RY1	RELAY	LZG-24HE
RY2	RELAY	VB-24TBU
RY3	RELAY	LZG-24HE
FUSE	FUSE	250V 3A
V	VARISTOR	SNRA420K-UL
X	OSCILLATOR	

POW-K243G5

SYMBOLS	DESCRIPTION	SPECIFICATIONS
12P REMOCON	CONNECTOR	SMK W-P5012#51
5P REMOCON	CONNECTOR	SMK W-P5005#51
3P SUPPLY	CONNECTOR	2-173270-3
2P PRY	CONNECTOR	8-173270-2
2P SEC	CONNECTOR	5273-02A
2P TH	CONNECTOR	5273-02-RE
5P FM	CONNECTOR	2-173270-5
2P TEST	CONNECTOR	171825-2

Downloaded from www.Manualslib.com manuals search engine

· Electrical Wiring Diagram (P. C. B. Ass'y) SAP243TCL

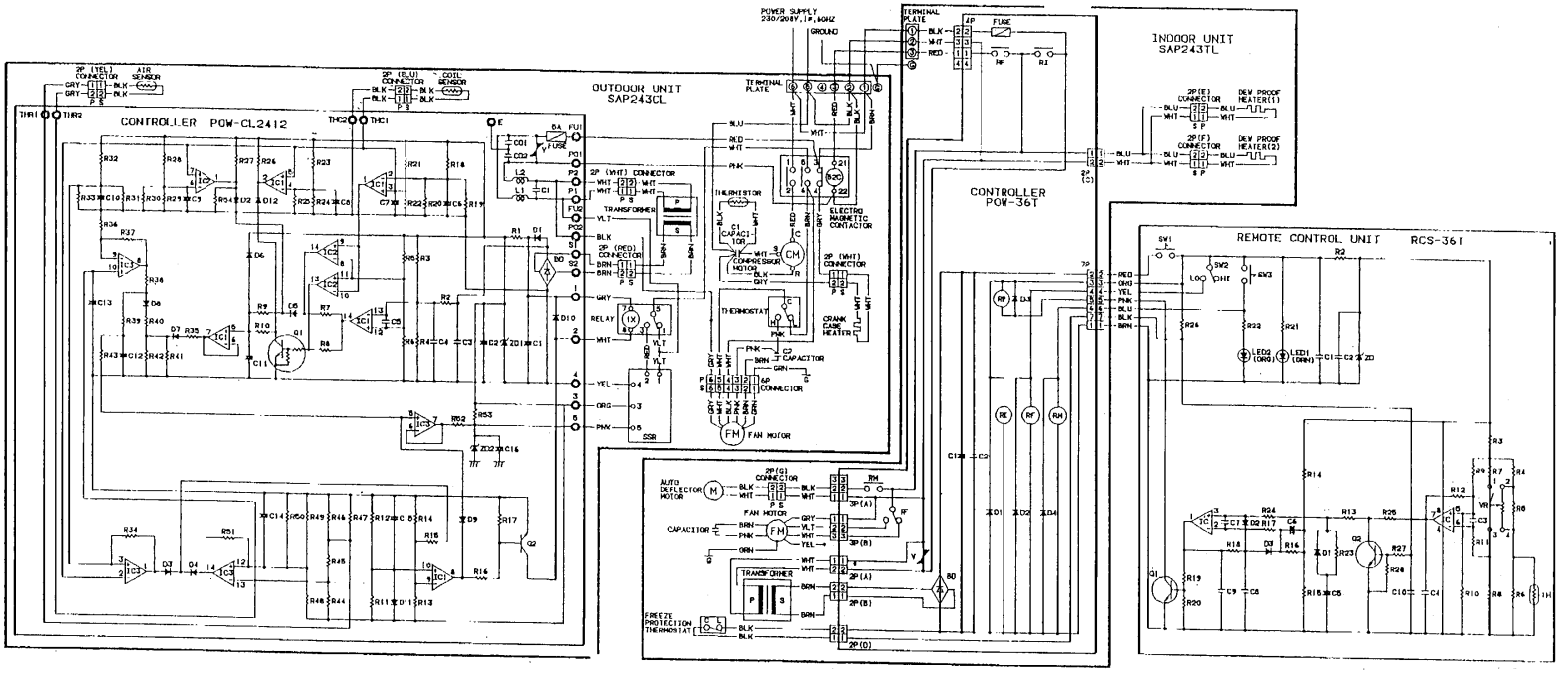

Downloaded from www.Manualslib.com manuals search engine

POW-CL2412

SYMBOLS	DESCRIPTION	SPECIFICATIONS
R1	RESISTOR	240Ω 2W ±5%
R2	RESISTOR	5.6KΩ 1/4W ±5%
R3	RESISTOR	18KΩ 1/4W ±5%
R4	RESISTOR	3.3KΩ 1/4W ±5%
R5	RESISTOR	22KΩ 1/4W ±5%
R6	RESISTOR	6.1KΩ 1/4W ±5%
R7	RESISTOR	22KΩ 1/4W ±5%
R8	RESISTOR	10KΩ 1/4W ±5%
R9	RESISTOR	910KΩ 1/4W ±5%
R10	RESISTOR	510KΩ 1/4W ±5%
R11	RESISTOR	150KΩ 1/4W ±5%
R12	RESISTOR	300KΩ 1/4W ±5%
R13	RESISTOR	5.6KΩ 1/4W ±5%
R14	RESISTOR	7.5KΩ 1/4W ±5%
R15	RESISTOR	1.2KΩ 1/4W ±5%
R16	RESISTOR	7.5KΩ 1/4W ±5%
R17	RESISTOR	2.2KΩ 1/4W ±5%
R18	RESISTOR	27KΩ 1/4W ±1%
R19	RESISTOR	3.6KΩ 1/4W ±1%
R20	RESISTOR	180KΩ 1/4W ±5%
R21	RESISTOR	22KΩ 1/4W ±1%
R22	RESISTOR	100KΩ 1/4W ±1%
R23	RESISTOR	27KΩ 1/4W ±1%
R24	RESISTOR	3KΩ 1/4W ±1%
R25	RESISTOR	39KΩ 1/4W ±5%
R26	RESISTOR	13KΩ 1/4W ±5%
R27	RESISTOR	13KΩ 1/4W ±5%
R28	RESISTOR	27KΩ 1/4W ±1%
R29	RESISTOR	4.7KΩ 1/4W ±1%
R30	RESISTOR	120KΩ 1/4W ±5%
R31	RESISTOR	1.5KΩ 1/4W ±1%
R32	RESISTOR	27KΩ 1/4W ±1%
R33	RESISTOR	36KΩ 1/4W ±5%
R34	RESISTOR	120KΩ 1/4W ±5%
R35	RESISTOR	560Ω 1/4W ±1%
R36	RESISTOR	5.1KΩ 1/4W ±1%
R37	RESISTOR	36KΩ 1/4W ±1%
R38	RESISTOR	1.5KΩ 1/4W ±1%
R39	RESISTOR	75KΩ 1/4W ±5%
R40	RESISTOR	750Ω 1/4W ±1%
R41	RESISTOR	300Ω 1/4W ±1%
R43	RESISTOR	100Ω 1/4W ±5%
R44	RESISTOR	15KΩ 1/4W ±1%
R45	RESISTOR	1.6KΩ 1/4W ±1%
R47	JUMPER	
R48	RESISTOR	5.6KΩ 1/4W ±1%
R49	RESISTOR	510Ω 1/4W ±1%
R50	RESISTOR	12KΩ 1/4W ±5%
R51	RESISTOR	200KΩ 1/4W ±5%
R52	RESISTOR	200Ω 1/4W ±5%

POW-CL2412

SYMBOLS	DESCRIPTION	SPECIFICATIONS
R53	RESISTOR	4.7KΩ 1/4W ±5%
R54	RESISTOR	75KΩ 1/4W ±5%
C1	CAPACITOR	470μF 50V
C2	CAPACITOR	22μF 25V
C3	CAPACITOR	473Z
C4	CAPACITOR	473Z
C5	CAPACITOR	223Z
C6	CAPACITOR	22μF 25V
C7	CAPACITOR	22μF 25V
C8	CAPACITOR	22μF 25V
C9	CAPACITOR	22μF 25V
C10	CAPACITOR	22μF 25V
C11	CAPACITOR	470MF 16V
C12	CAPACITOR	100μF 16V
C13	CAPACITOR	22μF 25V
C14	CAPACITOR	22μF 25V
C15	CAPACITOR	22μF 16V
C16	CAPACITOR	22μF 25V
CI	CAPACITOR	0.22μF 630V
CO1	CAPACITOR	3300PF 630V
CO2	CAPACITOR	3300PF 630V
D1	DIODE	DFS10C
D2	DIODE	DS446
D3	DIODE	DS446
D4	DIODE	DS446
D5	DIODE	DS446
D6	DIODE	DS446
D7	DIODE	DS446
D8	DIODE	DS446
D9	DIODE	DS446
D10	DIODE	DS446
D11	DIODE	DS446
BD	BRIDGE DIODE	DBA10C
ZD1	ZENER DIODE	GZB-12C
ZD2	ZENER DIODE	GZA6.2X
Q1	TRANSISTOR	2SC 3400
Q2	TRANSISTOR	2SC 2274 E
IC1	IC	NJM2902N
IC2	IC	LA6339
IC3	IC	NJM2902N
L1	FILTER COIL	SN12-500N
L2	FILTER COIL	SN12-500N
FUSE	FUSE	250V 5A
V	VARISTOR	SNR-14A420K

POW-36T

SYMBOLS	DESCRIPTION	SPECIFICATIONS
BD	BRIDGE DIODE	DBA10C
D1	DIODE	DS-442X
D2	DIODE	DS-442X
D3	DIODE	DS-442X
D4	DIODE	DS-442X
C1	CAPACITOR	470μF 50V
C2	CAPACITOR	0.047μF 50V
RI	RELAY	LZG-24HE DC24V
RF	RELAY	LZG-24HE DC24V
RM	RELAY	LZG-24HE DC24V
RP	RELAY	LZG-24HE DC24V
V	VARISTOR	SNR-A420K
7P	CONNECTOR	PLUG EI
4P	CONNECTOR	PLUG ULTLEX
3P(A)	CONNECTOR	PLUG ULTLEX
3P(B)	CONNECTOR	PLUG ULTLEX
2P(A)	CONNECTOR	PLUG ULTLEX
2P(B)	CONNECTOR	PLUG SL156
2P(C)	CONNECTOR	PLUG ULTLEX
2P(D)	CONNECTOR	5273-02A-BL
F	FUSE	250V-5A

RCS-36T

SYMBOLS	DESCRIPTION	SPECIFICATIONS
R2	RESISTOR	680Ω 2W
R3	RESISTOR	12KΩ 1/4W ±5%
R4	RESISTOR	3.9KΩ 1/4W ±1%
R5	RESISTOR	820Ω 1/4W ±1%
R6	RESISTOR	18KΩ 1/4W ±1%
R7	RESISTOR	10KΩ 1/4W ±5%
R8	RESISTOR	560KΩ 1/4W ±5%
R9	RESISTOR	2.94KΩ 1/4W ±1%
R10	RESISTOR	3KΩ 1/4W ±1%
R11	RESISTOR	10KΩ 1/4W ±1%
R12	RESISTOR	910KΩ 1/4W ±1%
R13	RESISTOR	11KΩ 1/4W ±5%
R14	RESISTOR	10KΩ 1/4W ±5%
R15	RESISTOR	2KΩ 1/4W ±5%
R16	RESISTOR	220KΩ 1/4W ±5%
R17	RESISTOR	10KΩ 1/4W ±5%
R18	RESISTOR	4.3KΩ 1/4W ±5%
R19	RESISTOR	6.8KΩ 1/4W ±5%
R20	RESISTOR	2.2KΩ 1/4W ±5%
R21	RESISTOR	1.2KΩ 1W
R22	RESISTOR	2.4KΩ 1/2W
R23	RESISTOR	12KΩ 1/4W ±5%
R24	RESISTOR	2.2KΩ 1/4W ±5%
R25	RESISTOR	10KΩ 1/4W ±5%
R26	RESISTOR	1.8KΩ 1W
R27	RESISTOR	12KΩ 1/4W ±5%
R28	RESISTOR	2KΩ 1/4W ±5%
C1	CAPACITOR	0.047μF 50V
C2	CAPACITOR	0.022μF 50V
C3	CAPACITOR	0.022μF 50V
C4	CAPACITOR	0.022μF 50V
C5	CAPACITOR	4.7μF 16V
C7	CAPACITOR	0.022μF 50V
C8	CAPACITOR	0.047μF 50V
C9	CAPACITOR	0.022μF 50V
C10	CAPACITOR	0.022μF 50V
ZD1	ZENER DIODE	GZA-12L
D1	DIODE	DS-442X
D2	DIODE	DS-442X
D3	DIODE	DS-442X
Q1	TRANSISTOR	2SC536KNP
Q2	TRANSISTOR	2SC536KNP

RCS-36T

SYMBOLS	DESCRIPTION	SPECIFICATIONS
VR	VARIABLE RESISTOR	S4511-5KBB
SW1	SWITCH	SUH 22V
SW2	SWITCH	SSSB 22003A
SW3	SWITCH	SPUZ 12009A
LED1	LED(GRN)	HLE-G-LTS
LED2	LED(ORG)	HLE-O-LTS
IC	IC	LA6358
TH	THERMISTOR	OCS-5K-2
C6	CAPACITOR	RX-10 330μF10V

Downloaded from www.Manualslib.com manuals search engine

Electrical Wiring Diagram (P. C. B. Ass'y) 34KL12W

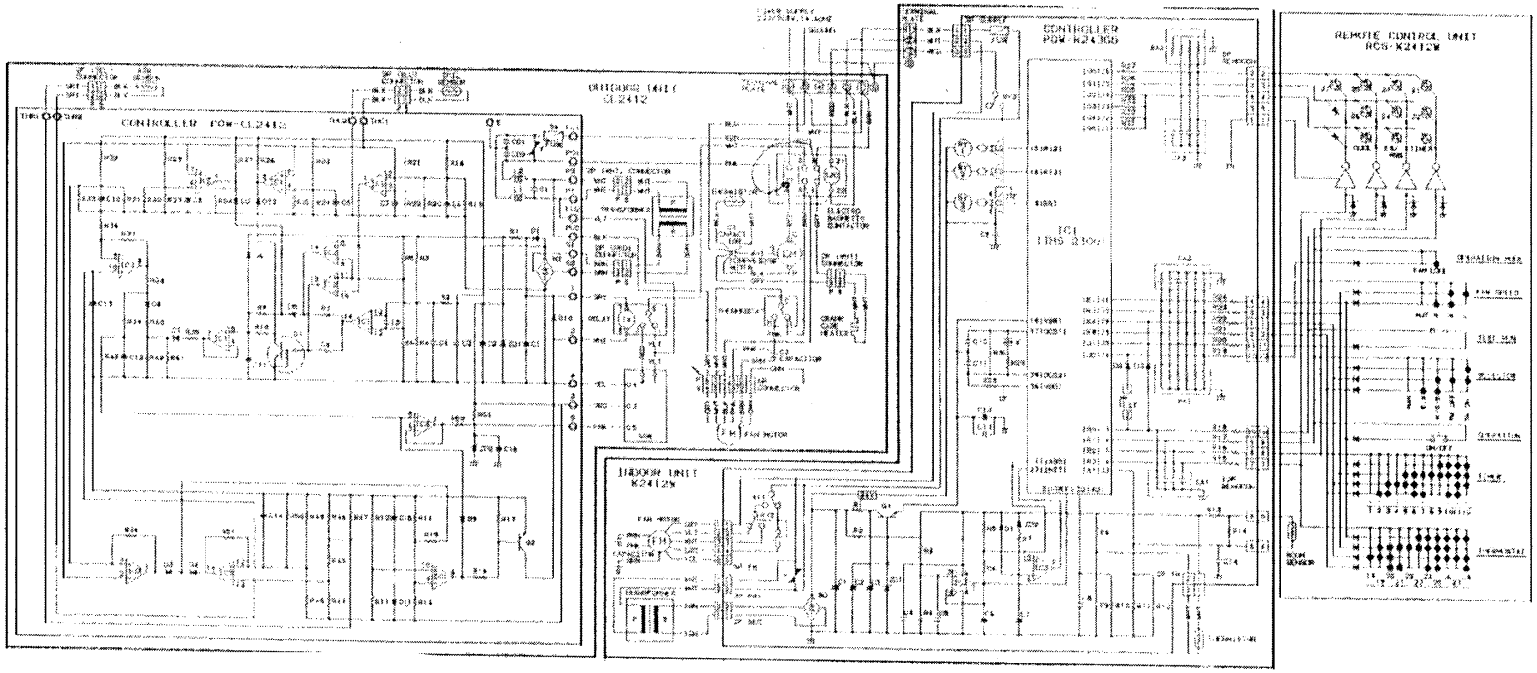

Downloaded from www.Manualslib.com manuals search engine

PWB-D2412

SYMBOLS	DESCRIPTION	SPECIFICATIONS
R1	RESISTOR	24Ω 2W ±5%
R2	RESISTOR	5.6kΩ 1/4W ±5%
R3	RESISTOR	15kΩ 1/4W ±5%
R4	RESISTOR	3.3kΩ 1/4W ±5%
R5	RESISTOR	22kΩ 1/4W ±5%
R6	RESISTOR	5.1kΩ 1/4W ±5%
R7	RESISTOR	22kΩ 1/4W ±5%
R8	RESISTOR	10kΩ 1/4W ±5%
R9	RESISTOR	410kΩ 1/4W ±5%
R10	RESISTOR	510kΩ 1/4W ±5%
R11	RESISTOR	180kΩ 1/4W ±5%
R12	RESISTOR	330kΩ 1/4W ±5%
R13	RESISTOR	5.6kΩ 1/4W ±5%
R14	RESISTOR	7.5kΩ 1/4W ±5%
R15	RESISTOR	1.2kΩ 1/4W ±5%
R16	RESISTOR	7.5kΩ 1/4W ±5%
R17	RESISTOR	2.2kΩ 1/4W ±5%
R18	RESISTOR	27kΩ 1/4W ±1%
R19	RESISTOR	3.6kΩ 1/4W ±1%
R20	RESISTOR	150kΩ 1/4W ±5%
R21	RESISTOR	220Ω 1/4W ±1%
R22	RESISTOR	100kΩ 1/4W ±1%
R23	RESISTOR	270Ω 1/4W ±1%
R24	RESISTOR	8Ω 1/4W ±1%
R25	RESISTOR	39kΩ 1/4W ±5%
R26	RESISTOR	10kΩ 1/4W ±5%
R27	RESISTOR	15kΩ 1/4W ±5%
R28	RESISTOR	27kΩ 1/4W ±1%
R29	RESISTOR	4.7kΩ 1/4W ±1%
R30	RESISTOR	11.3kΩ 1/4W ±5%
R31	RESISTOR	1.5kΩ 1/4W ±1%
R32	RESISTOR	27kΩ 1/4W ±1%
R33	RESISTOR	36kΩ 1/4W ±5%
R34	RESISTOR	120kΩ 1/4W ±5%
R35	RESISTOR	560Ω 1/4W ±1%
R36	RESISTOR	9.1kΩ 1/4W ±1%
R37	RESISTOR	36kΩ 1/4W ±1%
R38	RESISTOR	1.5kΩ 1/4W ±1%
R39	RESISTOR	75kΩ 1/4W ±5%
R40	RESISTOR	750Ω 1/4W ±1%
R41	RESISTOR	330Ω 1/4W ±1%
R42	RESISTOR	100Ω 1/4W ±5%
R43	RESISTOR	10kΩ 1/4W ±1%
R44	RESISTOR	1.8kΩ 1/4W ±1%
R45	RESISTOR	1.8kΩ 1/4W ±1%
R46	RESISTOR	1.8kΩ 1/4W ±1%
R47	[illegible]	
R48	RESISTOR	5.6kΩ 1/4W ±1%
R49	RESISTOR	5.6kΩ 1/4W ±1%
R50	RESISTOR	10kΩ 1/4W ±5%
R51	RESISTOR	220kΩ 1/4W ±5%
R52	RESISTOR	1.2kΩ 1/4W ±5%

PWB-D2412

SYMBOLS	DESCRIPTION	SPECIFICATIONS
R53	RESISTOR	4.7kΩ 1/4W ±5%
R54	RESISTOR	750Ω 1/4W ±5%
C1	CAPACITOR	470μF 50V
C2	CAPACITOR	22μF 25V
C3	CAPACITOR	47μF
C4	CAPACITOR	47μF
C5	CAPACITOR	22μF
C6	CAPACITOR	22μF 25V
C7	CAPACITOR	22μF 25V
C8	CAPACITOR	22μF 25V
C9	CAPACITOR	22μF 25V
C10	CAPACITOR	22μF 25V
C11	CAPACITOR	470μF 10V
C12	CAPACITOR	100μF 16V
C13	CAPACITOR	22μF 25V
C14	CAPACITOR	22μF 25V
C15	CAPACITOR	33μF 16V
C16	CAPACITOR	22μF 25V
C1	CAPACITOR	0.22μF 630V
C21	CAPACITOR	3300PF 630V
C22	CAPACITOR	3300PF 630V
D1	DIODE	1N4005
D2	DIODE	1S446
D3	DIODE	1S446
D4	DIODE	1S446
D5	DIODE	1S446
D6	DIODE	1S446
D7	DIODE	1S446
D8	DIODE	1S446
D9	DIODE	1S446
D10	DIODE	1S446
D11	DIODE	1S446
BD	BRIDGE DIODE	1S010C
ZD1	ZENER DIODE	RD6-12B
ZD2	ZENER DIODE	RD6.8V
Q1	TRANSISTOR	2SB 1408
Q2	TRANSISTOR	2SD 2274
IC1	IC	MB82P20N
IC2	IC	LA5159
IC3	IC	MB82P20N
L1	FILTER COIL	SMD-500mH
L2	FILTER COIL	SMD-560mH
FUSE	FUSE	250V 5A
V	VARISTOR	SNR-11A440K

PWB-R2435

SYMBOLS	DESCRIPTION	SPECIFICATIONS
R1	RESISTOR	100Ω 1W ±5%
R2	RESISTOR	1.5kΩ 1W ±5%
R3	RESISTOR	30kΩ 1/4W ±1%
R4	RESISTOR	56kΩ 1/4W ±1%
R5	RESISTOR	1.8kΩ 1/4W ±1%
R6	RESISTOR	1.3kΩ 1/4W ±1%
R7	RESISTOR	51kΩ 1/4W ±5%
R8	RESISTOR	110kΩ 1/4W ±1%
R9	RESISTOR	200kΩ 1/4W ±1%
R10	RESISTOR	510kΩ 1/4W ±1%
R11	RESISTOR	15kΩ 1/4W ±1%
R12	RESISTOR	200kΩ 1/4W ±1%
R13	RESISTOR	15kΩ 1/4W ±1%
R14	RESISTOR	7.5kΩ 1/4W ±5%
R15	RESISTOR	24kΩ 1/4W ±5%
R16	RESISTOR	240Ω 1/4W ±5%
R17	RESISTOR	240Ω 1/4W ±5%
R18	RESISTOR	240Ω 1/4W ±5%
R19	RESISTOR	470Ω 1/4W ±5%
R20	RESISTOR	470Ω 1/4W ±5%
R21	RESISTOR	470Ω 1/4W ±5%
R22	RESISTOR	470Ω 1/4W ±5%
R23	RESISTOR	470Ω 1/4W ±5%
R24	RESISTOR	470Ω 1/4W ±5%
R25	RESISTOR	390Ω 1/4W ±5%
R26	RESISTOR	270Ω 1/2W ±5%
R27	RESISTOR	270Ω 1/2W ±5%
R28	RESISTOR	3.3kΩ 1/4W ±1%
R29	RESISTOR	180Ω 1/4W ±1%
R30	RESISTOR	56kΩ 1/4W ±1%
R31	RESISTOR	390Ω 1/4W ±5%
R32	RESISTOR	390Ω 1/4W ±5%
R33	RESISTOR	390Ω 1/4W ±5%
C1	CAPACITOR	470μF 50V
C2	CAPACITOR	10μF 50V
C3	CAPACITOR	22μF 50V
C4	CAPACITOR	220 50V
C5	CAPACITOR	220 50V
C6	CAPACITOR	1μF 50V
C7	CAPACITOR	10μF 50V
C8	CAPACITOR	220 50V
C9	CAPACITOR	221 50V
C10	CAPACITOR	2700PF ±10% 50V
C11	CAPACITOR	1000PF ±10% 50V
C12	CAPACITOR	22μF 16V
C13	CAPACITOR	470 50V
C14	CAPACITOR	104 50V

PWB-R2435

SYMBOLS	DESCRIPTION	SPECIFICATIONS
RA1	RESISTOR ARRAY	56K 4811
RA2	RESISTOR ARRAY	10K 4811
CA1	CAPACITOR ARRAY	472 4811
CA2	CAPACITOR ARRAY	472 4811
CA3	CAPACITOR ARRAY	102 4811
BD	BRIDGE DIODE	GBA10C
ZD1	ZENER DIODE	GZ09.1B
ZD2	ZENER DIODE	GZ4.3 1K
D1	DIODE	DS-4424
D2	DIODE	DS-4424
D3	DIODE	DS-4424
IC1	IC	MB82301 MB2074
IC2	IC	LB 1234
IC3	IC	LA 6450
Q1	TRANSISTOR	2SD213-F
RY1	RELAY	TQ2-24HE
RY2	RELAY	VB-24HU
RY3	RELAY	LZC-24HE
FUSE	FUSE	250V 3A
V	VARISTOR	SNR-A10K UL
X	OSCILLATOR	

PWB-R2435

SYMBOLS	DESCRIPTION	SPECIFICATIONS
CP REMOCON	CONNECTOR	SMK 4-P5012-451
CP REMOCON	CONNECTOR	SMK 4-P5012-451
CP SUPPLY	CONNECTOR	2-173278-3
CP PRI	CONNECTOR	8-173278-2
CP SEC	CONNECTOR	5273-02A
CP TH	CONNECTOR	5273-02-HS
CP FM	CONNECTOR	2-173278-5
CP HOT	CONNECTOR	171825-2

Downloaded from www.Manualslib.com manuals search engine

- P.C.B. Ass'y (Printed Pattern)

POW-K243G

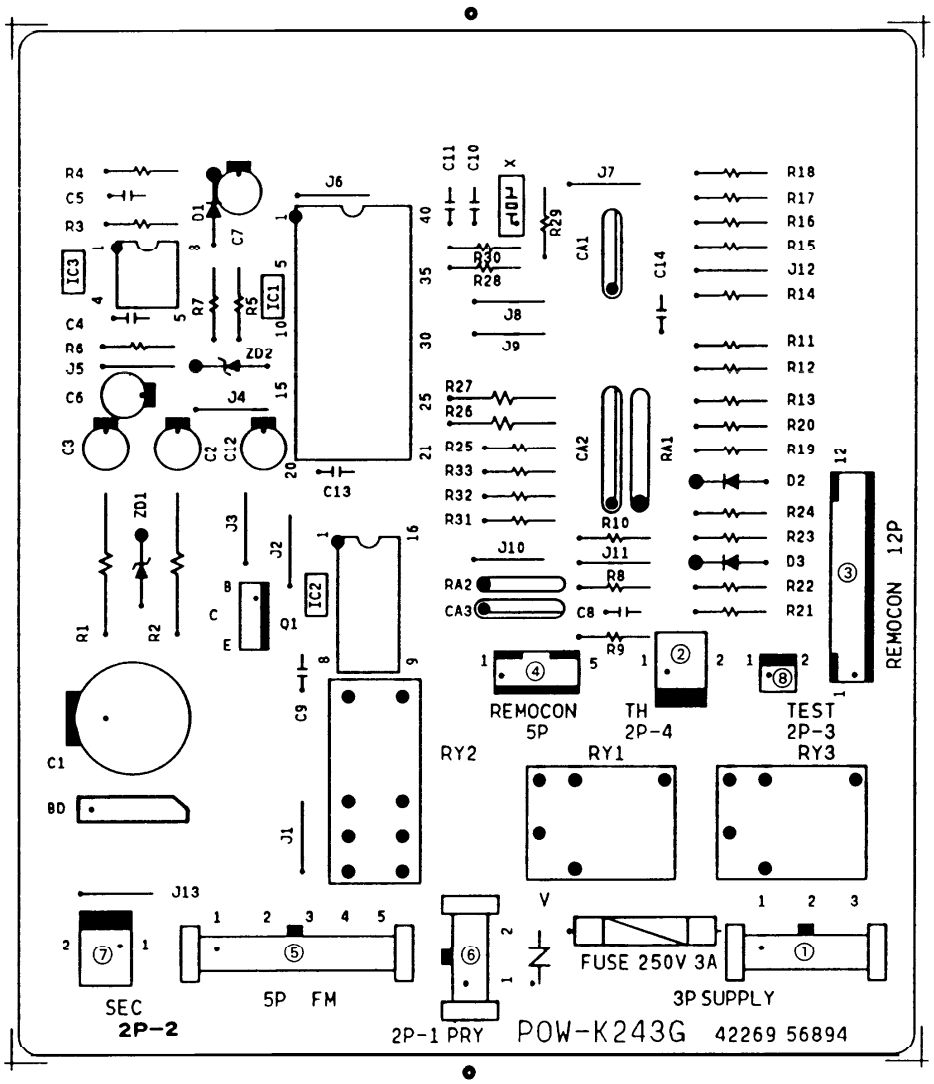

① Connector, Power Supply to P.C.B.*
② Connector, Thermistor, 9 V.D.C.
③ Connector, Remote Control Unit (12p), 9 V.D.C.
④ Connector, Remote Control Unit (5p), 9 V.D.C.
⑤ Connector, Fan Motor*
⑥ Connector, Transformer (Primary*)
⑦ Connector, Transformer (Secondary, 19 V.A.C.)
⑧ Connector, Test, 9 V.D.C.
* The asterisk "*" indicates that line voltage is applied.

Downloaded from www.Manualslib.com manuals search engine

- P.C.B. Ass'y (Printed Pattern)

POW-36T

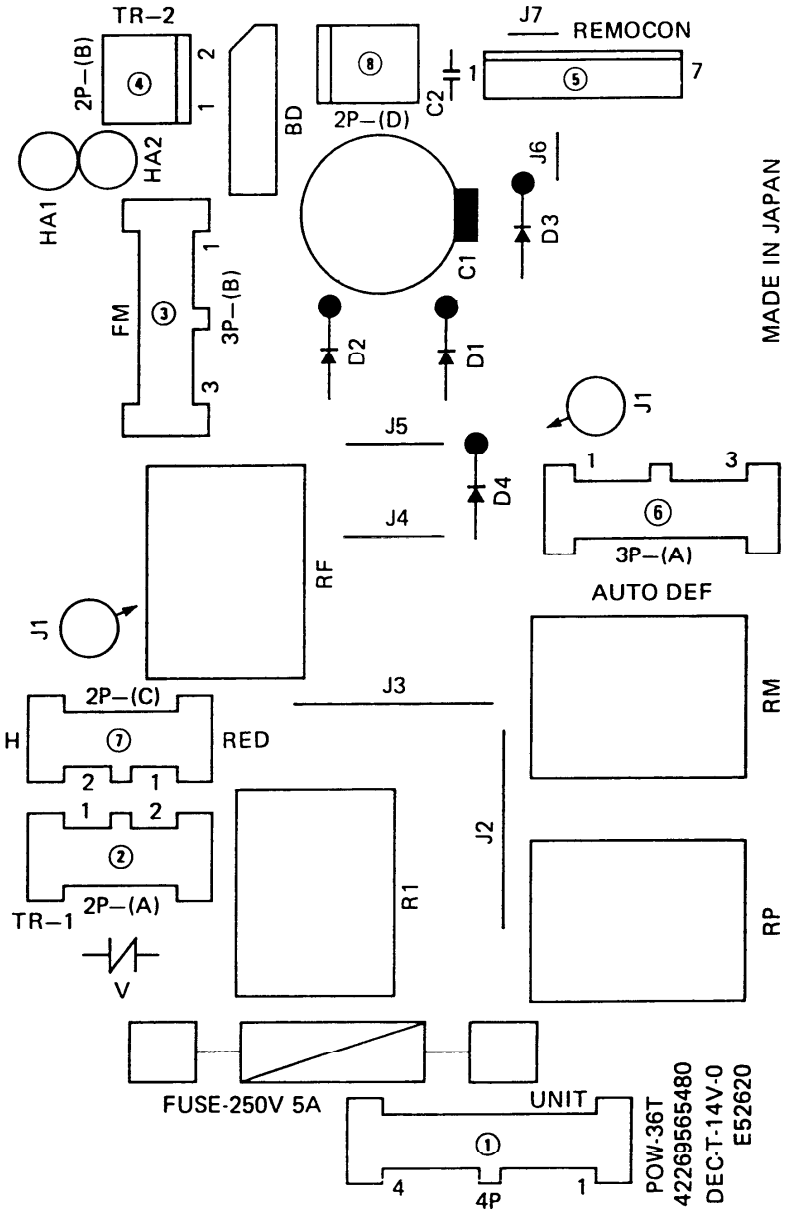

① Connector, Inter Unit Power Line: 24 V. D.C.
② Connector, Transformer (Primary: *)
③ Connector, Fan Motor*
④ Connector, Transformer
(Secondary: 19 V. A.C.)
⑤ Connector, Remote Control Unit: 24 V. D.C.
⑥ Connector, Auto Deflector*
⑦ Connector, Dew Proof Warmer*
⑧ Connector, Freeze Protection
Thermostat: 24 V. D.C.

The asterisk "*" indicates that line voltage is applied.

Downloaded from www.Manualslib.com manuals search engine

- P.C.B. Ass'y (Printed Pattern)

POW-36R

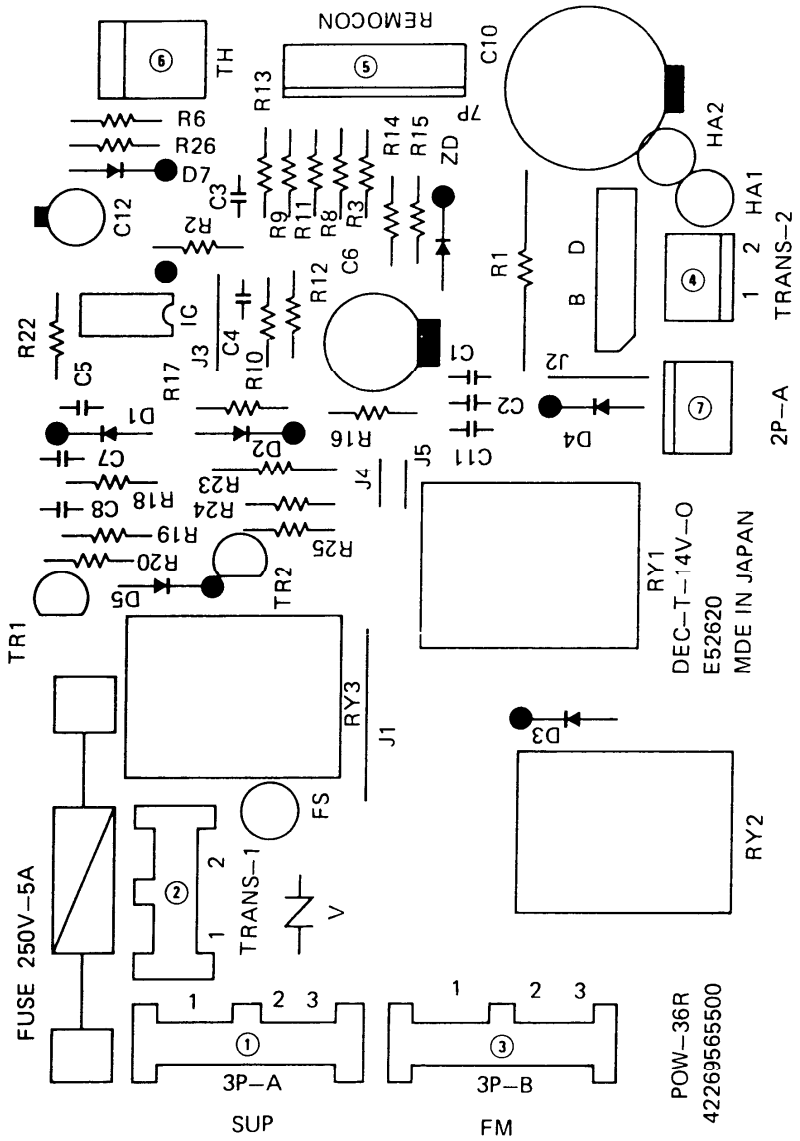

1. Connector, Power Supply to PCB *
2. Connector, Transformer (Primary: *)
3. Connector, Fan Motor *
4. Connector, Transformer (Secondary: 19V)
5. Connector, Remote Control Unit 24VDC
6. Connector, Thermistor Sensor 24VDC
7. Connector, Freeze Protection Thermostat 24VDC

* Line Voltage (High)

Downloaded from www.Manualslib.com manuals search engine

Electrical Characteristics

24KL12W

Performance at 230/208V - 1 ϕ - 60Hz		Indoor Unit	Outdoor Unit		Complete Unit
		Fan Motor	Fan Motor	Compressor	
Rated Conditions	A	0.40/0.40	1.20/1.20	8.9/9.8	10.5/11.4
	W	30/70	250/230	2,070/2,050	2,400/2,350
Locked Rotor Amperes	A	0.46/0.42	2.34/2.29	72	-

SAP243TCL

Performance at 230/208V - 1 ϕ - 60Hz		Indoor Unit	Outdoor Unit		Complete Unit
		Fan Motor	Fan Motor	Compressor	
Rated Conditions	A	0.60/0.60	1.20/1.20	9.3/10.1	11.1/11.9
	W	135/120	250/230	2,060/2,050	2,520/2,450
Locked Rotor Amperes	A	0.85/0.77	2.34/2.29	72	-

SAP243RCL

Performance at 230/208V - 1 ϕ - 60Hz		Indoor Unit	Outdoor Unit		Complete Unit
		Fan Motor	Fan Motor	Compressor	
Rated Conditions	A	0.80/0.80	1.20/1.20	9.3/10.1	11.3/12.1
	W	135/165	250/230	2,130/2,070	2,570/2,480
Locked Rotor Amperes	A	1.1/0.98	2.34/2.29	72	-

Remarks: Rated Conditions : Outdoor unit entering air temperature 95°F D.B./75°F W.B.
Indoor unit entering air temperature 80°F D.B./67°F W.B.

Downloaded from www.Manualslib.com manuals search engine

13. TROUBLESHOOTING

— Quick Access Index —

Page

1. Check before and after "TROUBLESHOOTING" 71

2. Air conditioner does not operate 72
 (1) Circuit breaker trips (or fuse blows) 72
  a) When circuit breaker is set to ON, it is tripped soon (Resetting is not possible) 72
  b) Circuit breaker trips when the operation button is depressed 75
 (2) Neither indoor unit nor outdoor unit runs 76

3. Some part of air conditioner does not operate 77
 (1) Only indoor fan does not run 77
 (2) Neither outdoor fan nor compressor runs 78
 (3) Only outdoor fan does not run 79
 (4) Only compressor does not run 81
 (5) Compressor frequently repeats ON and OFF 82

4. Air conditioner operates, but abnormalities are observed 83
 (1) Poor cooling 83
 (2) Excessive cooling 84

5. If some sensor is defective 85
 (1) Indoor (heat exchanger) coil temp. sensor is defective 85
 (2) Room temp. sensor is defective 85

Downloaded from www.Manualslib.com manuals search engine

1. Check before and after "TROUBLESHOOTING"

(1) Check power supply conductors
- Check if power supply conductors are connected to terminals No. 5 and No. 6 at terminal plate in the outdoor units.

Refer to page 51 WIRING SYSTEM DIAGRAM.

(2) Check interunit power line.
- Check interunit power wires are connected properly from outdoor unit to indoor unit.

Refer to page 51 WIRING SYSTEM DIAGRAM.

(3) Check power supply.
- Is voltage in specified range (±10% of the rating) ?

Refer to Unit Specifications

- Be sure whether power is presented.
  If checking of following Troubleshooting must be done in conditions that power is supplied, an uninsulated live part that can cause ELECTRIC SHOCK shall be taken care so that protection against unintentional contact is provided.

(4) Check lead wires and connectors in indoor and outdoor units.
- Check if insulation of lead wires are damaged.
- Check if lead wires and connectors are connected firmly.
- Check if wiring is correct.

Downloaded from www.Manualslib.com manuals search engine

2. Air conditioner does not operate

(1) Circuit breaker trips (or fuse blows).

a) When circuit breaker is set to ON, it is tripped soon.
(Resetting is not possible.)

- There is a possibility of ground fault.
- Check insulation resistance.
  If resistance value is 1MΩ or less, it is a defect of insulation (NO).

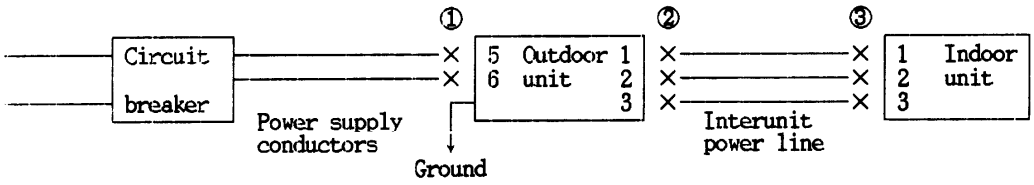

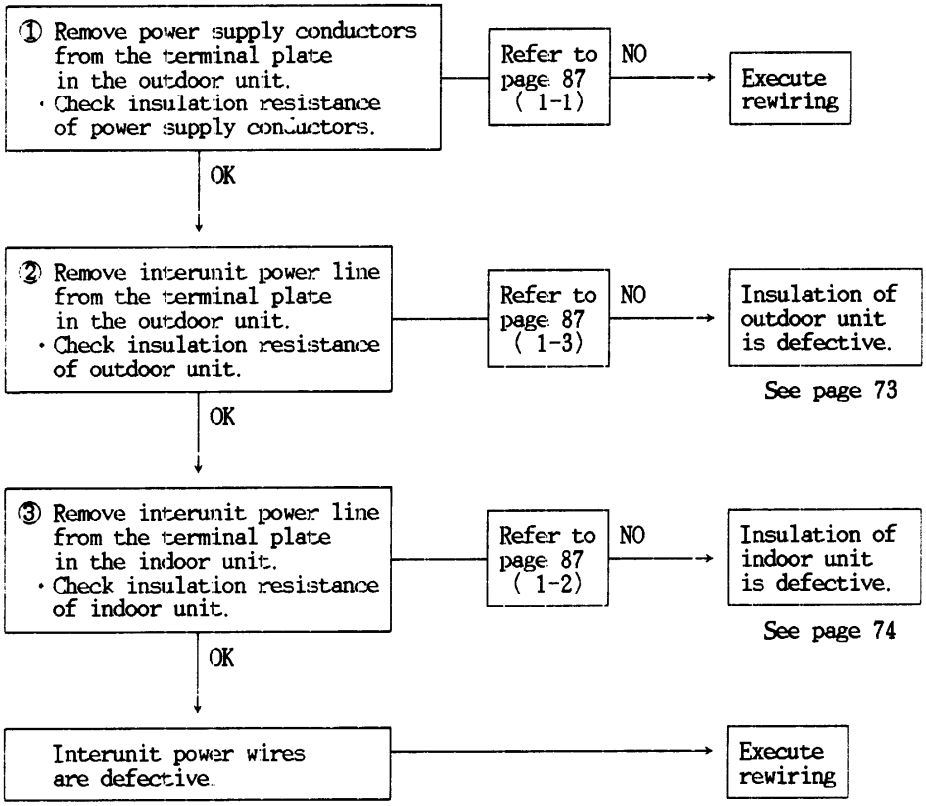

Downloaded from www.Manualslib.com manuals search engine

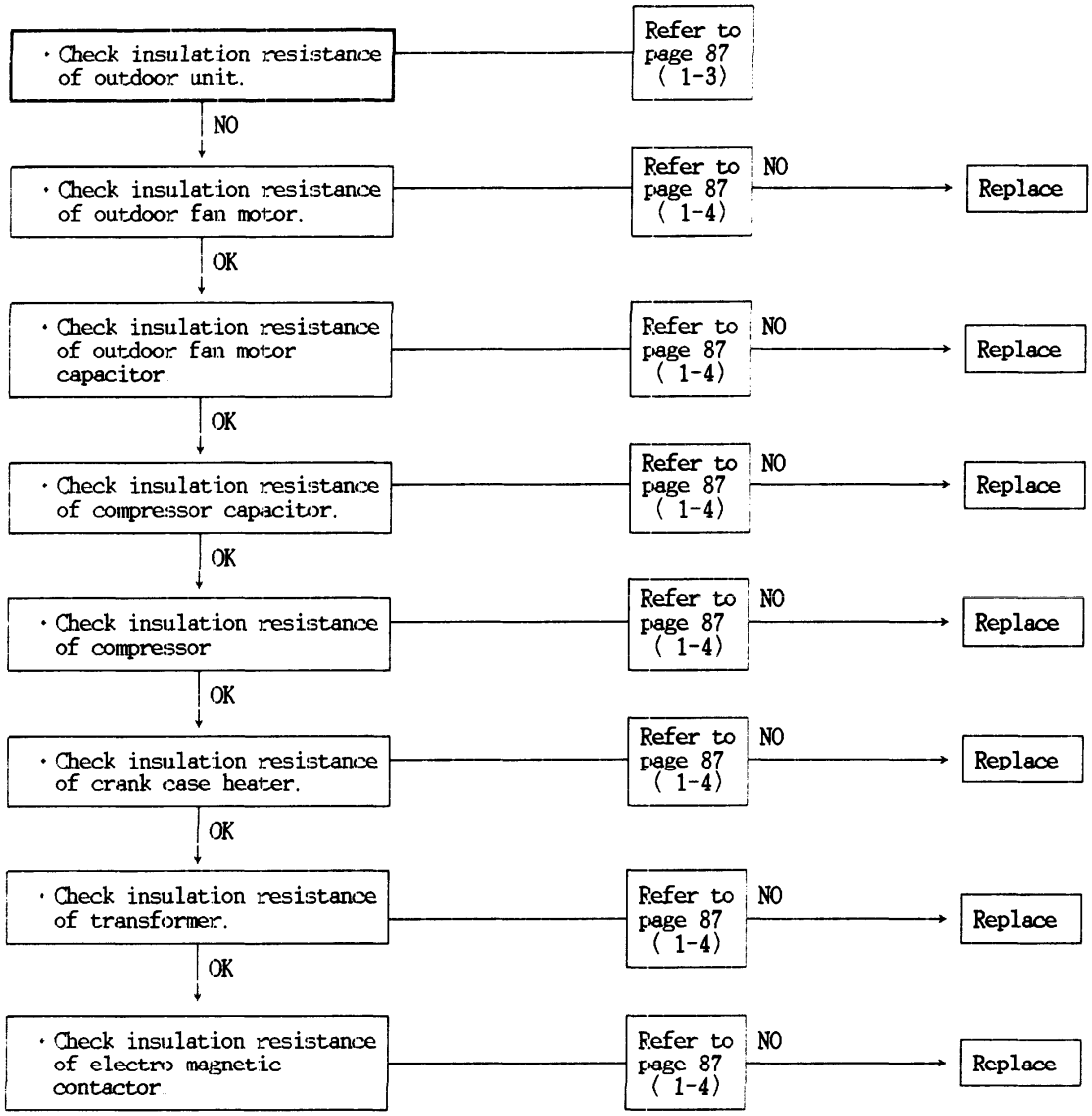

Downloaded from www.Manualslib.com manuals search engine

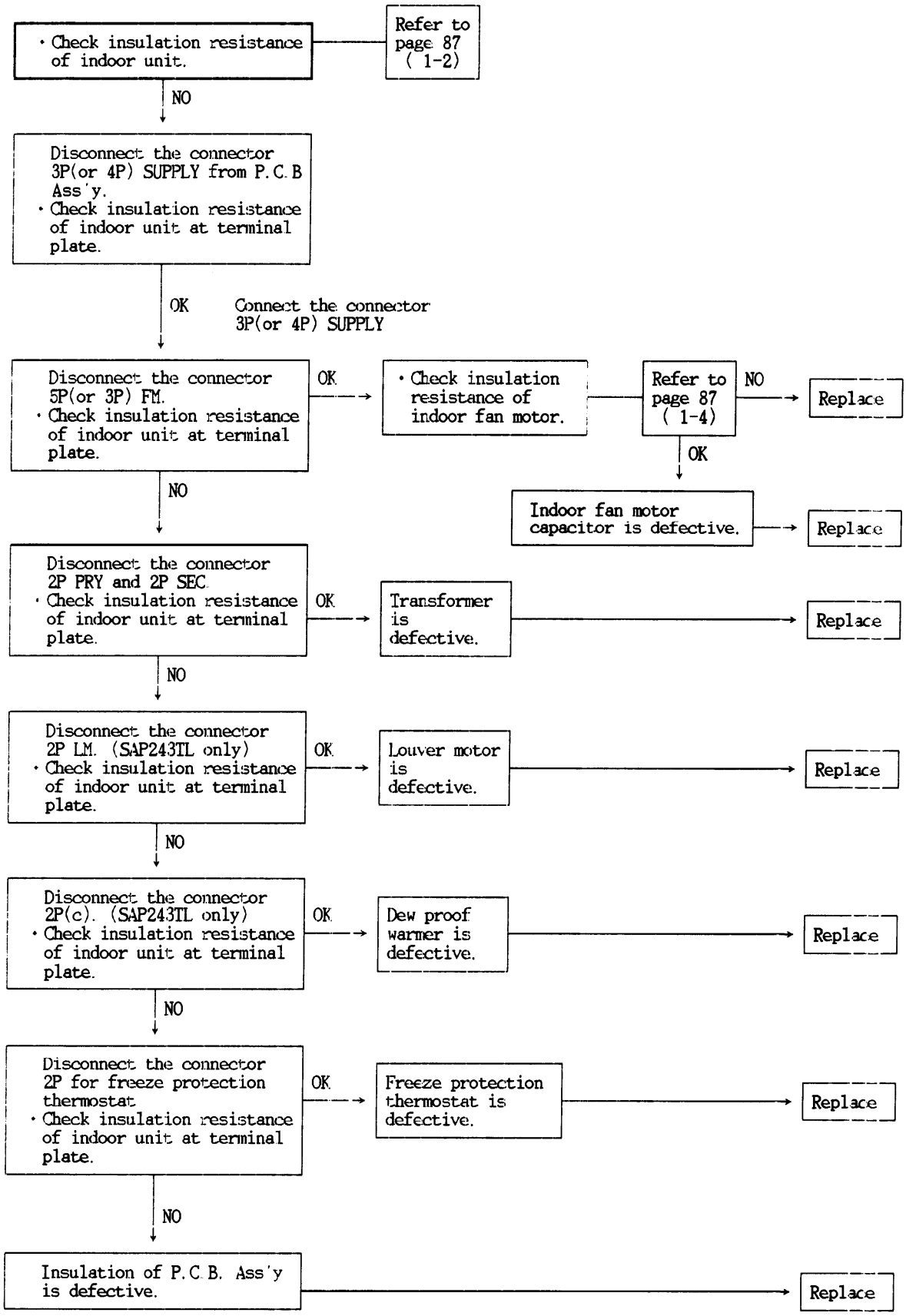

Downloaded from www.Manualslib.com manuals search engine

b) Circuit breaker trips when the operation button is depressed.

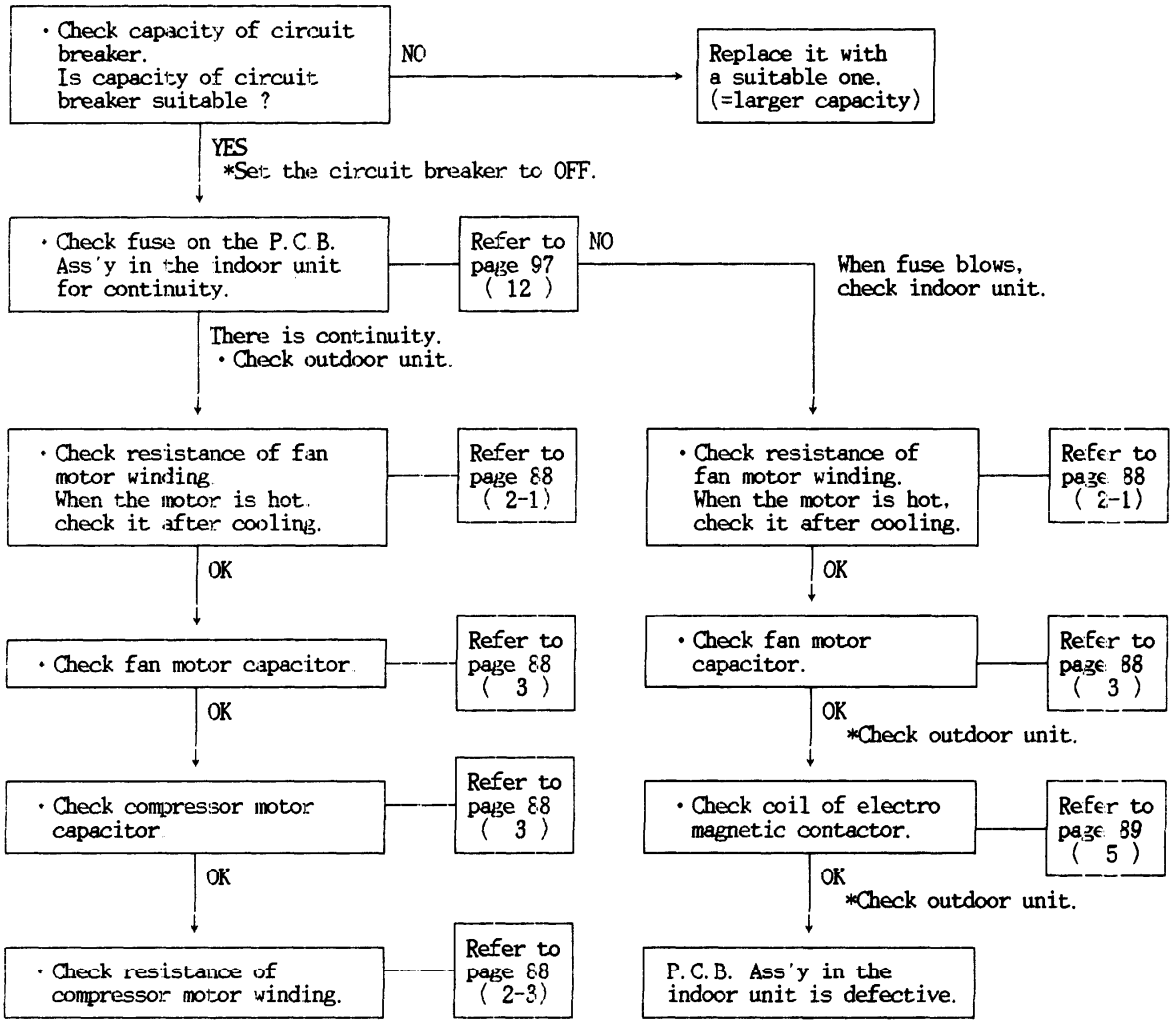

NOTE ;
In case of defect,
replace the respective part.

Downloaded from www.Manualslib.com manuals search engine

(2) Neither indoor unit nor outdoor unit runs.

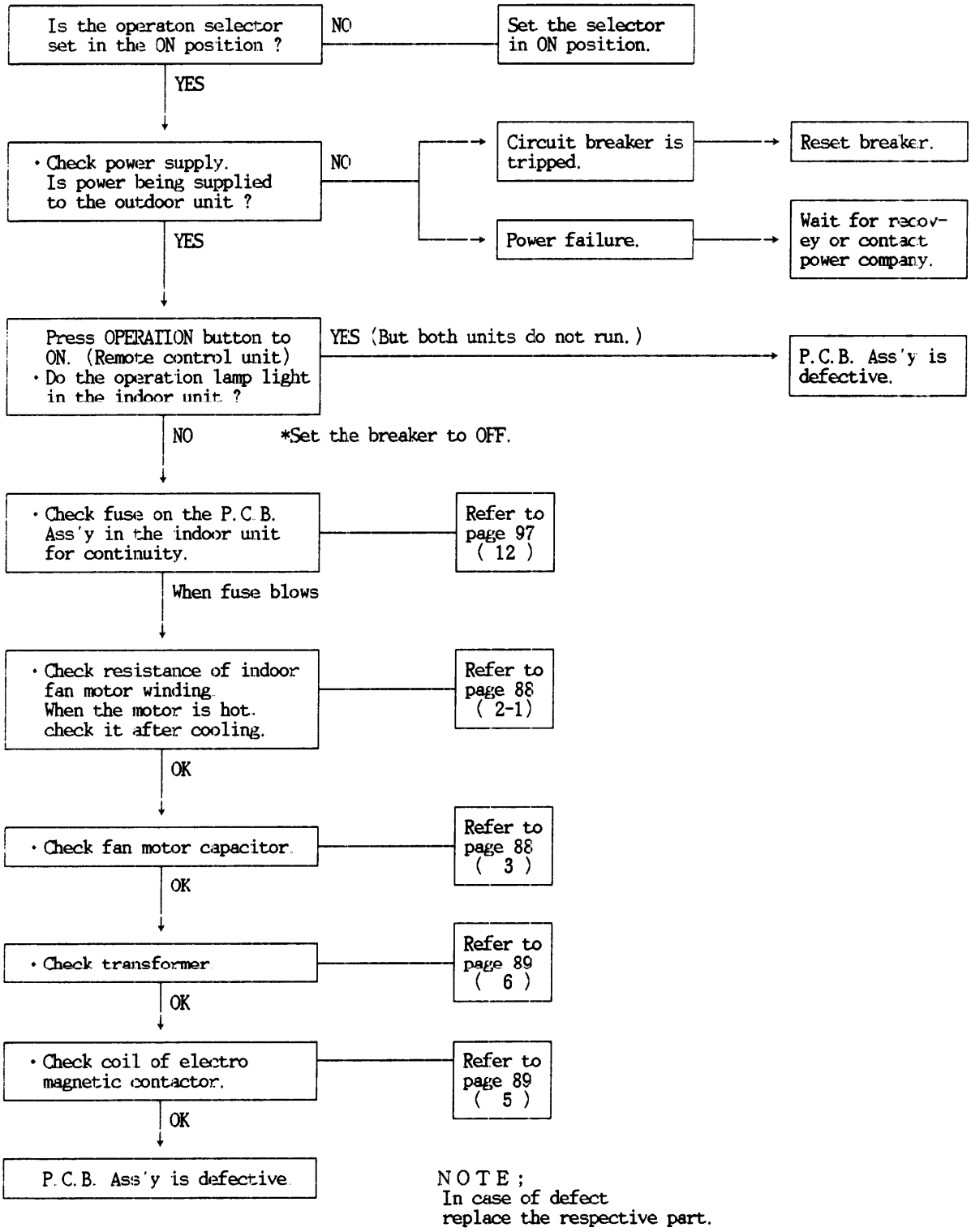

Downloaded from www.Manualslib.com manuals search engine

3. Some part of air conditioner does not operate.

(1) Only indoor fan does not run.

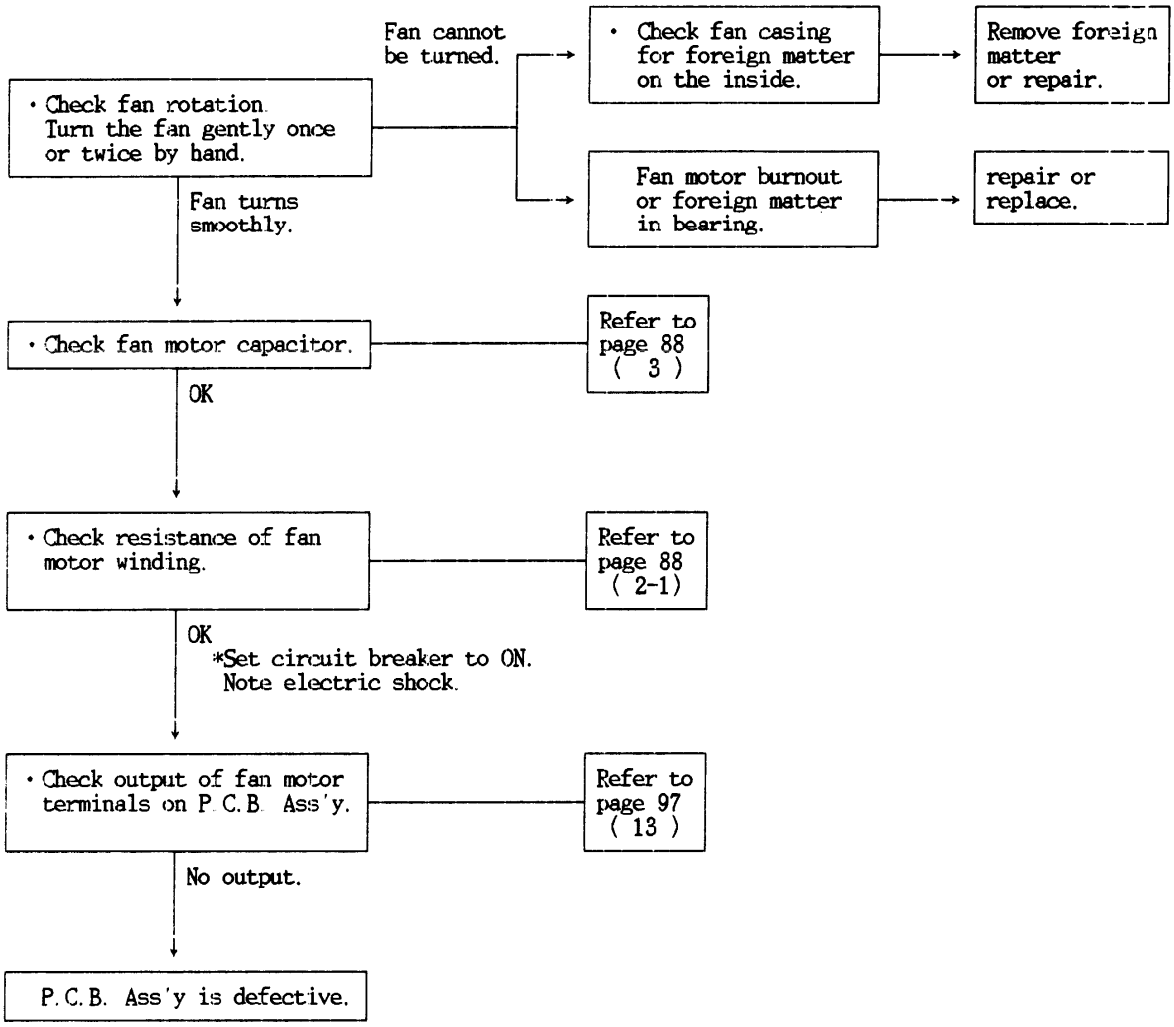

NOTE;
In case of defect,
replace the respective part.

Downloaded from www.Manualslib.com manuals search engine

(2) Neither outdoor fan nor compressor runs.

N o t e : Check following points at first;
1. Is thermostat setting suitable ?
2. Has 3 minutes timer operated ? (No operation for 3 minutes after power ON.)
3. Does freeze prevention thermostat operate ? (Wait for about 6 minutes.)

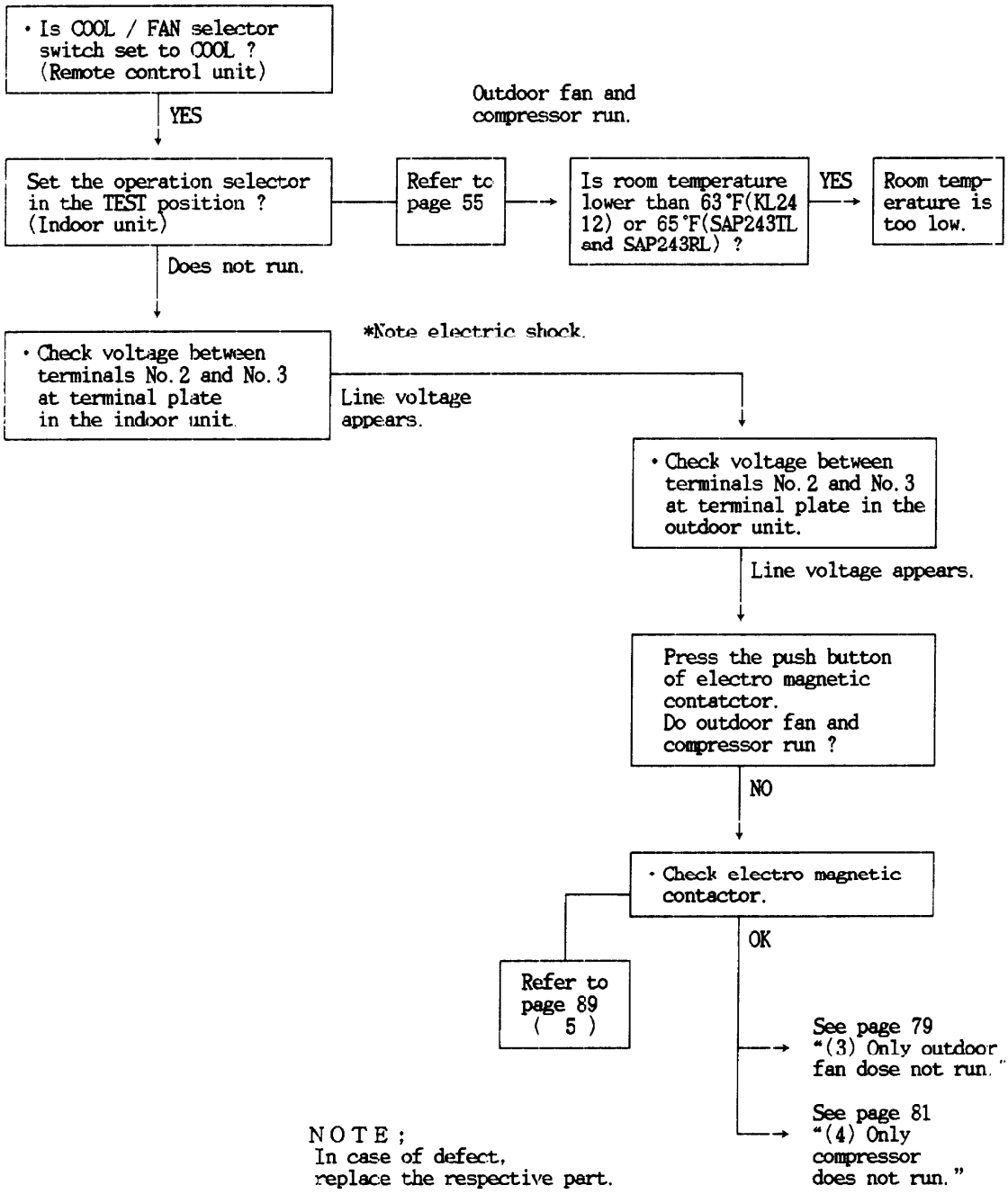

Downloaded from www.Manualslib.com manuals search engine

(3) Only outdoor fan does not run

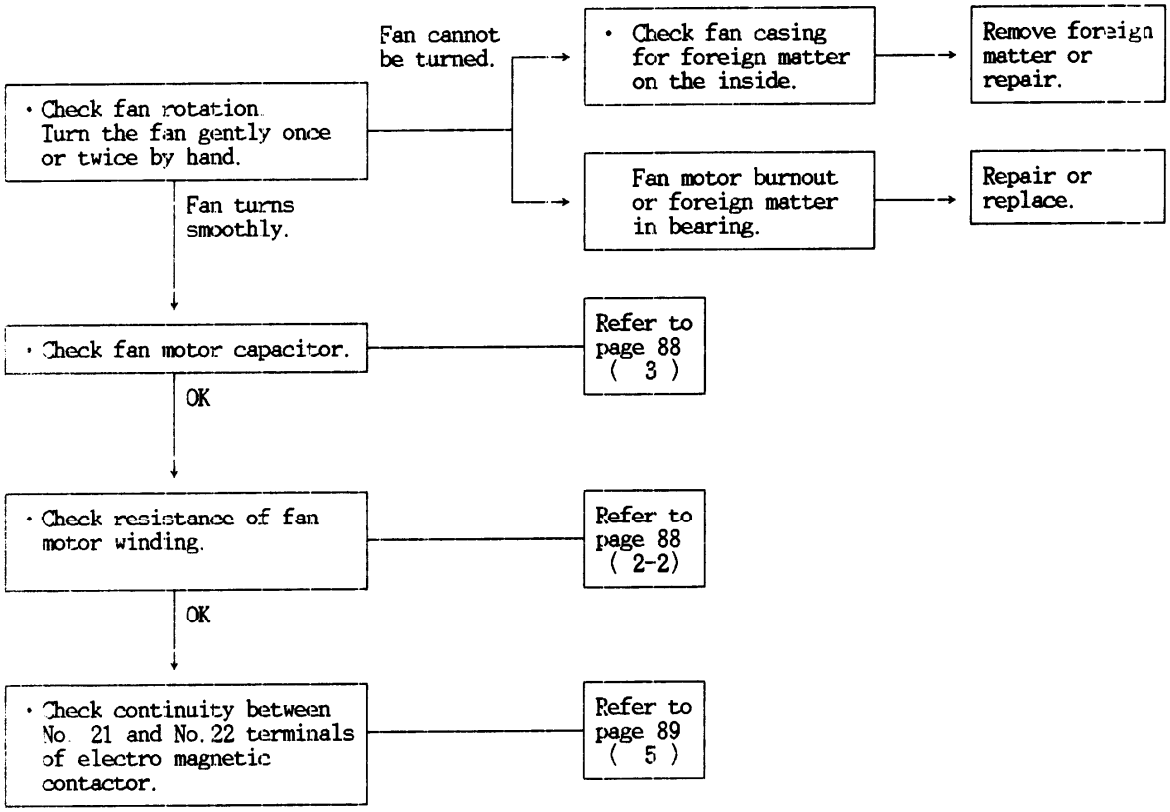

NOTE;
In case of defect,
replace the respective part.

Downloaded from www.Manualslib.com manuals search engine

The compressor start to run, at the same time the fan motor runs. But the fan motor stops about 20 seconds later.

Possibility of IC(SSR) defect	Refer to page 98 (14)

The compressor start to run, but the fan dose not run.

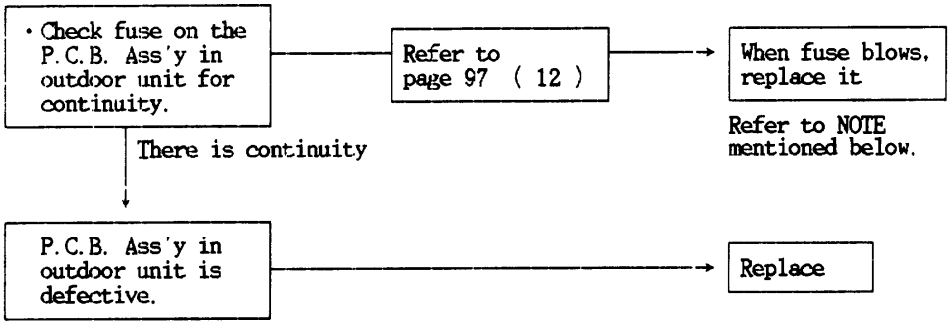

NOTE: If fuse blows again, check the following item.

• Check transforme in outdoor unit.	Replace in case of defect.

Downloaded from www.Manualslib.com manuals search engine

(4) Only compressor does not run.

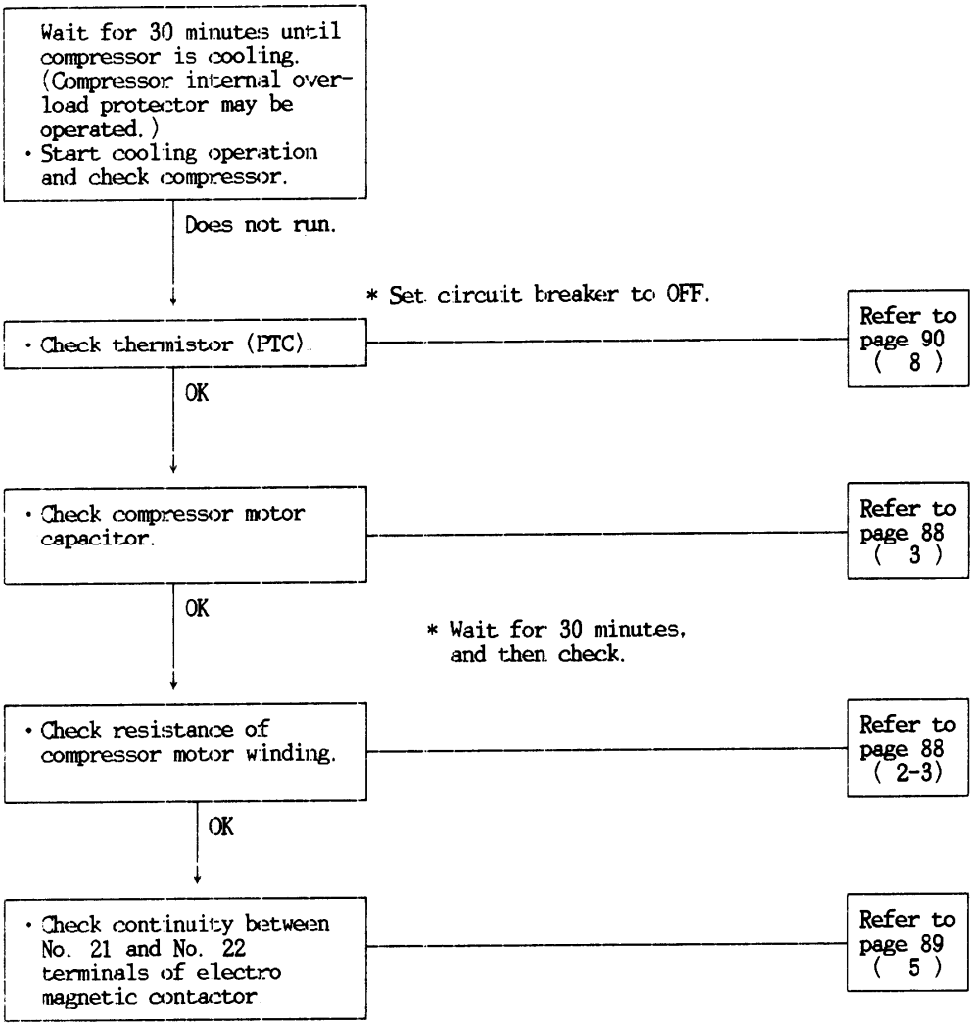

NOTE;
In case of defect,
replace the respective part.

Downloaded from www.Manualslib.com manuals search engine

(5) Compressor frequently repeats ON and OFF.

(Only compressor repeats ON and OFF, while indoor unit and outdoor fan run without fail.)

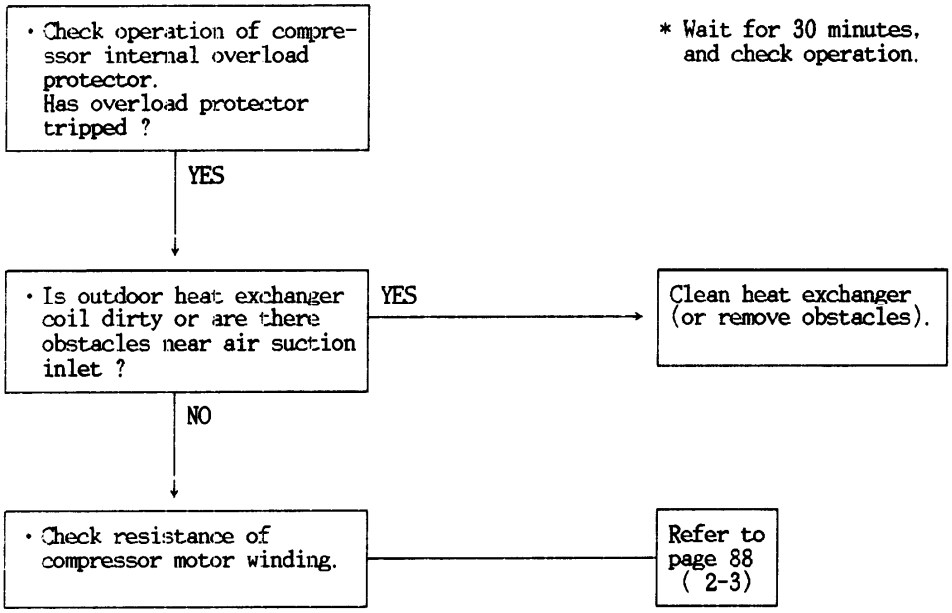

NOTE;
In case of defect, replace the respective part.

Downloaded from www.Manualslib.com manuals search engine

4. Air conditioner operates, but abnormalities are observed.

(1) Poor cooling

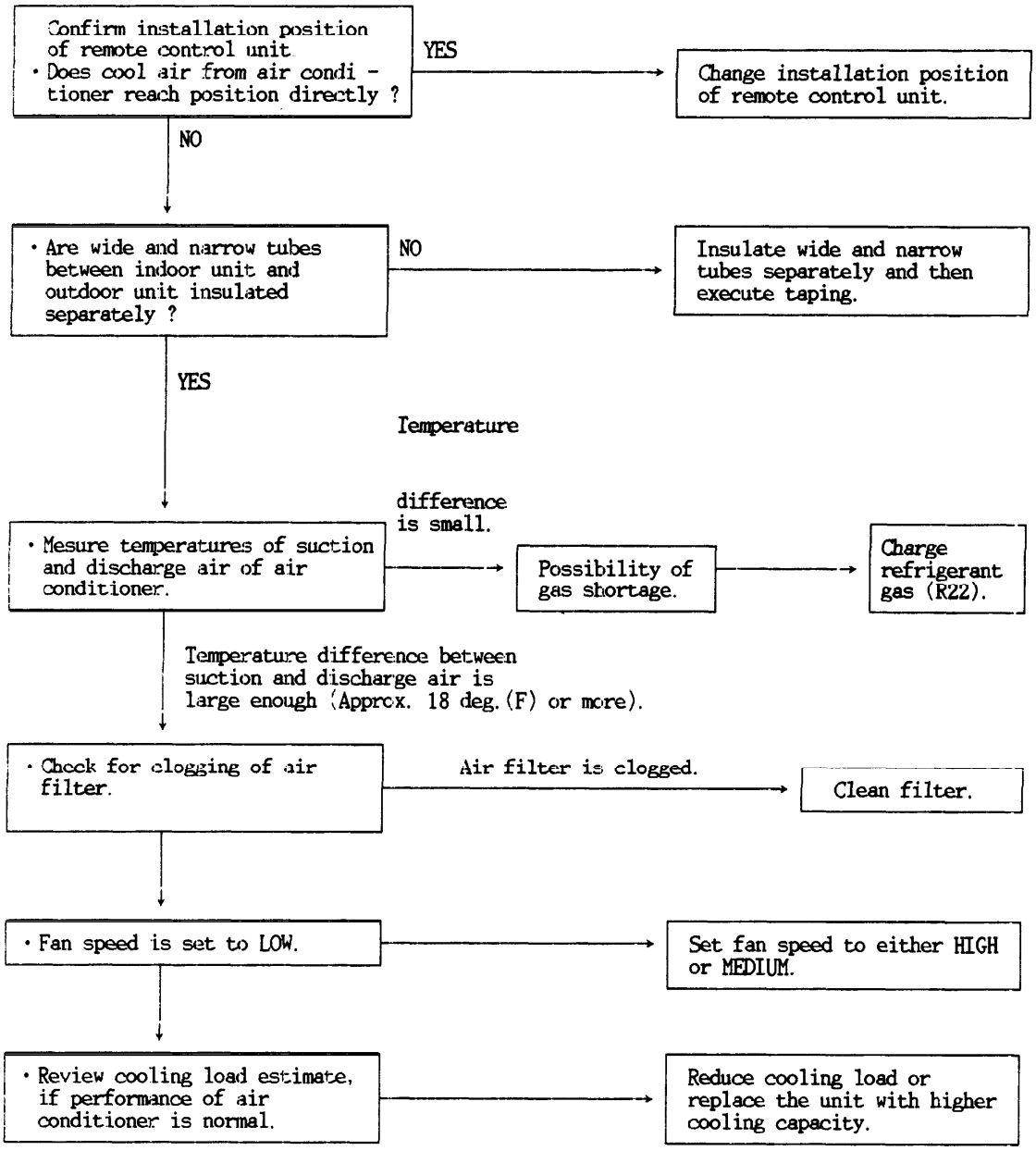

Downloaded from www.Manualslib.com manuals search engine

(2) Excessive cooling

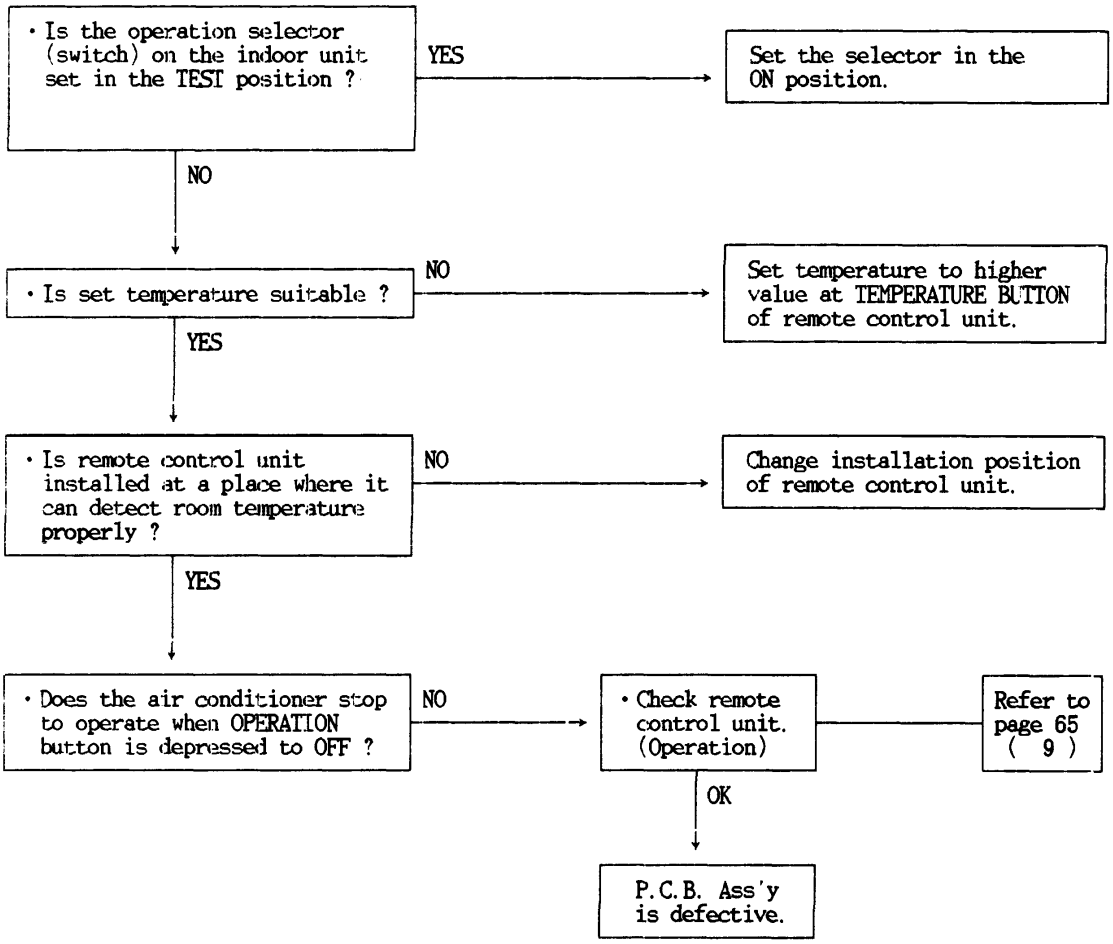

NOTE;
In case of defect,
replace the respective part.

Downloaded from www.Manualslib.com manuals search engine

5. If some sensor is defective

(1) Indoor (heat exchanger) coil temp. sensor is defective.

1) Open
Even the air conditioner does not Thermo. OFF, compressor and outdoor fan repeat ON for 10 minutes and OFF for 6 minutes.

2) Shortage
When the water be dehumidified is frozen in the indoor coil, "Freeze prevention" does not operate.

(2) Room temp. sensor (in remote control unit) is defective.

1) Open (= Always Thermo. OFF)
Neither outdoor fan nor compressor runs.

2) Shortage (= Always Thermo. ON)
Outdoor fan and compressor does not stop. - Excessive cooling.

Downloaded from www.Manualslib.com manuals search engine

14. CHECKING AND REPLACING ELECTRICAL COMPONENTS

— Quick Access Index —

		Page
1.	Measurement of Insulation Resistance	87
2.	Checking of the Motor Winding	88
3.	Checking of the Motor Capacitor	88
4.	Checking of the Relay	89
5.	Checking of the Electro Magnetic Contactor	89
6.	Checking of the Transformer	89
7.	Checking of the Thermistor	89
8.	Checking of the Thermistor (PTC)	90
9.	Checking of the Remote Control Unit Proper - KL2412	91
10.	Checking of the Remote Control Unit Proper - SAP243TL	93
11.	Checking of the Remote Control Unit Proper - SAP243RL	95
12.	Checking of the Continuity of Fuse on the P.C.B. Ass'y	97
13.	Checking of the Output of the P.C.B. Ass'y for Fan Motor Terminals	97
14.	Checking of the IC (Solid State Relay)	98

Downloaded from www.Manualslib.com manuals search engine

1. Measurement of Insulation Resistance

- The insulation is in good condition if the resistance exceeds 1 MΩ

1-1 Power Supply Cords

Clamp the ground line of the Power Supply Cord with a lead clip of the insulation resistance tester and measure the resistance by placing a probe on either of the two power lines.
Then also measure the resistance between the ground line and the other power line. (Fig. 1)

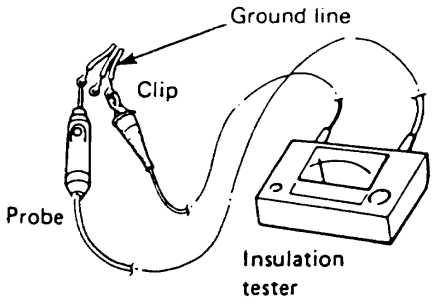

Fig. 1

1-2 Indoor Unit

Clamp the aluminum plate fin or copper tube with a lead clip of the insulation resistance tester and measure the resistance by placing a probe on ① , and then ② on the terminal plate. (Fig. 2)

1-3 Outdoor Unit

Clamp the metallic part of the unit with a lead clip of the insulation resistance tester and measure the resistance by placing a probe on ①, and then ② on the terminal plate. (Fig. 2)

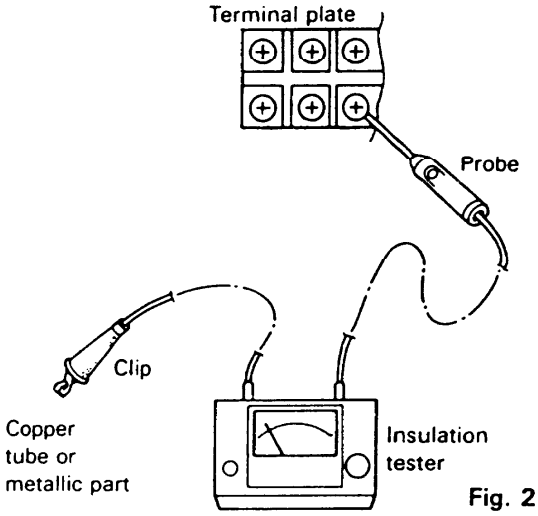

Fig. 2

1-4 Measurement of Insulation Resistance for Electric Parts.

Disconnect the lead wires of electric part from terminal plate, P.C.B. Ass'y or capacitor etc. Like remote the connector.
Then measure the insulation resistance by method of Fig. 1~4.
Refer to Electric Wiring Diagram.

Note:
If the probe does not enter the pole because the hole is too narrow then use a probe with a thinner pin.

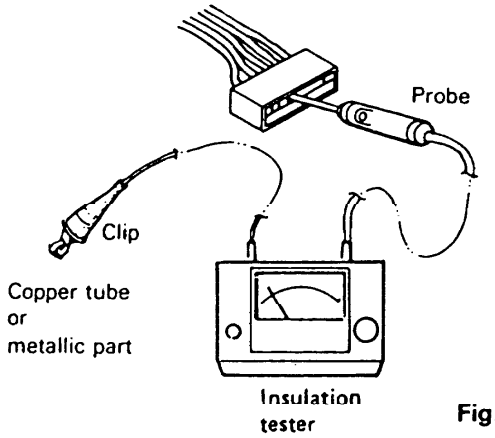

Fig. 3

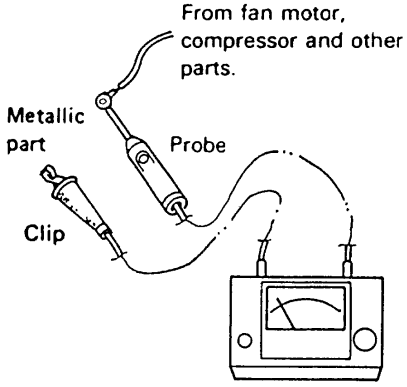

Fig. 4

Downloaded from www.Manualslib.com manuals search engine

2. Checking of the Motor Winding

Refer to Major Component Specifications (Coil resistance)

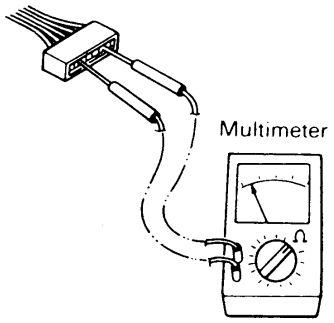

Fig. 5

2-1 Indoor Fan Motor

See page 4,5,6

2-2 Outdoor Fan Motor

See page 4,5,6

2-3 Compressor Motor

Remove the terminal cover of the compressor motor, set the resistance measuring range of the multimeter to "X1Ω" and check the continuity between each pair out of the 3 terminals as indicated in Fig. 6

See page 4,5,6

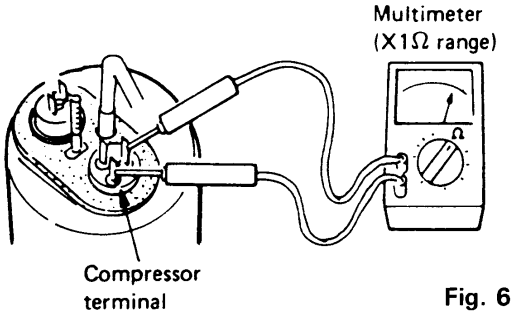

Fig. 6

2-4 Synchronous Motor (Louver Motor)

See page 7 (SAP243TL only)

3. Checking of the Motor Capacitor

Checking of any of the indoor fan motor capacitor, outdoor fan motor capacitor and compressor motor capacitor can be done by the same method.

Remove both the lead wire terminals connected to the capacitor, place the probe on the capacitor terminals as shown in the Fig. 7 and observe the deflection of the pointer, setting the resistance measuring range of the multimeter to the maximum value.

For good condition of the capacitor the pointer bounces to a great extent and then gradually returns to its original position.

The range of deflection and deflection time differ according to the capacity of the capacitor.

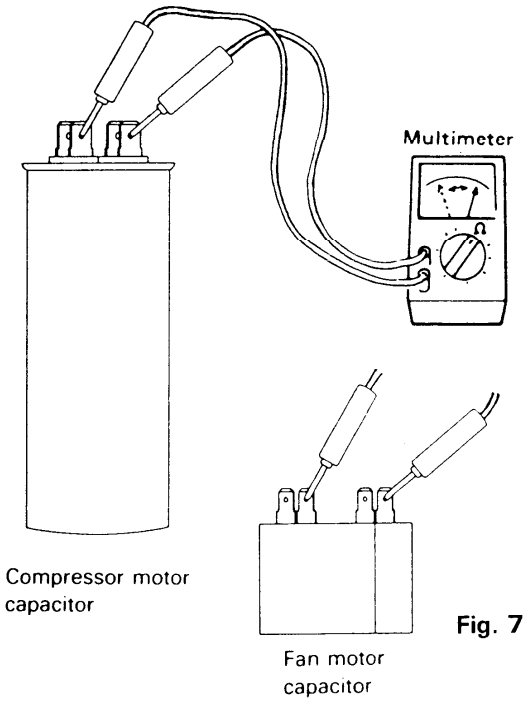

Fig. 7

Downloaded from www.Manualslib.com manuals search engine

4. Checking of the Relay

- Refer to Other Component Specifications.

See page 8

MY2F-T1-USTS

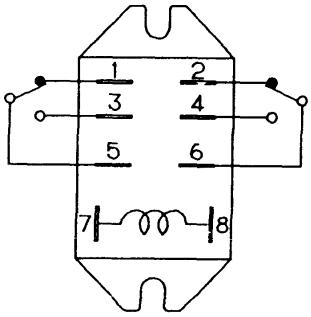

Fig. 8

5. Checking of the Electro Magnetic Contactor

- Refer to Other Component Specifications. P. 8.

5-1 Coil

Measure the resistance between No. 21 and No. 22
Refer to Fig. 9.

5-2 Continuity

- Fig. 9. (b) shows the coil is not excited condition.
- When the push button is depressed, the coil become excited condition.

CLK-16E3-21

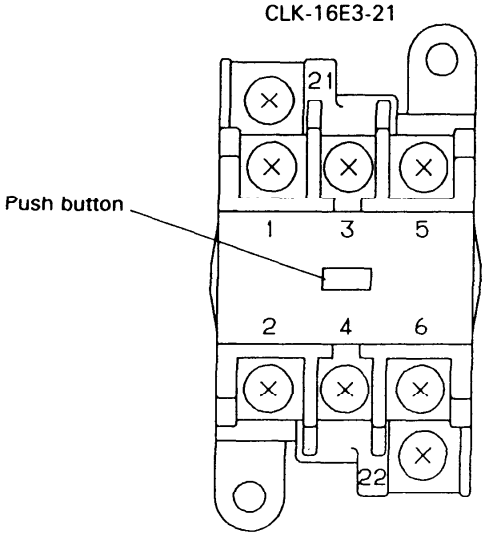

Fig. 9 (a)

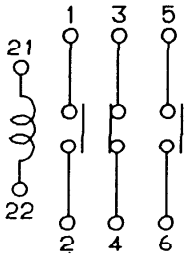

Fig. 9 (b)

6. Checking of the Transformer

- Refer to Other Component Specifications
  See page 7.

7. Checking of the Thermistor (Indoor coil temp. sensor)

- Refer to Other Component Specifications.
  See page 7.

Downloaded from www.Manualslib.com manuals search engine

8. Checking of the Thermistor (PTC)

Measure the resistance.
Refer to Other Component Specifications. P. 8.

TDK 101YV

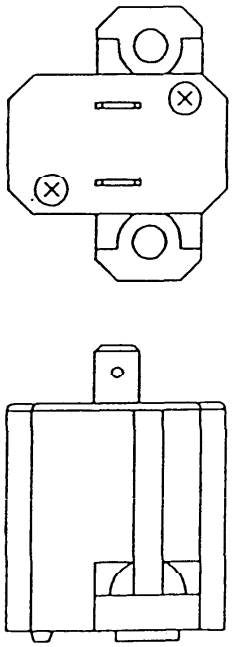

Fig. 10

Downloaded from www.Manualslib.com manuals search engine

9. Checking of the Remore Control Unit Proper

(Check each item, referring to the P.C.B. Ass'y and the circuit diagrams)

A. Caution: Use of the Test Switch
(RUN/TEST RUN)
"TEST RUN" shows the position to run the air conditioner for the test at the installment.

If this operation is continued for a long time, there would be a bad effect on the air conditioner because of overcooling. Therefore, use this switch only for checking, and in any case, **DO NOT KEEP ON COOLING FOR MORE THAN 15 MIN. UNDER TEST RUN MODE.**

When the checking is over, **TURN THE SWITCH BACK TO ITS ORIGINAL POSITION (= RUN) WITHOUT FAIL.**

B. Checking of the Items of the Remote Control Unit

At first, pull out the connector (12P) of the remote control unit from the P.C.B. ass'y of the unit.

(1) Checking of the Room Temperature Sensor
Measure the resistance between No. 5 and No. 6 connector.

NOTE:
If the probe does not enter the pole because the hole is too narrow then use a probe with a thinner pin.

(For an ambient temperature of 77°F, the resistance is about 5kΩ).

(2) Fan Speed Selector
Check the continuity of the connector No. 3 and No. 4 against No. 10 (place the positive (+) probe on No. 10 and negative (—) probe on No. 3 and then No. 4).

Checking points	Position of the selector			
	High	Med.	Low	Auto
10 — 3	NO	YES	YES	NO
10 — 4	YES	YES	NO	NO

NOTE: YES ..... Continuity
NO ..... Discontinuity

Table 1

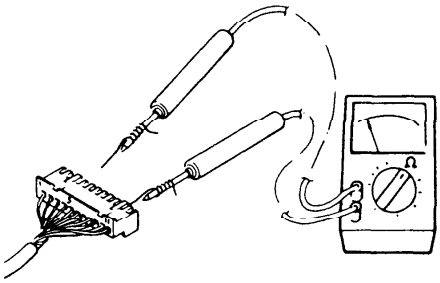

Fig. 11

Downloaded from www.Manualslib.com manuals search engine

(3) Checking of the Selector

Check the continuity of the connectors No. 1, 2 and 3 (placing the negative (-) probe) against No. 9 (placing the positive (+) probe).

Connector No.	Position of the Selector				
	MANUAL	ENERGY SAVER	NIGHT SETBACK	TIMER	
				ON	OFF
9 — 3	NO	NO	NO	YES	NO
9 — 1	NO	NO	YES	YES	YES
9 — 2	NO	YES	YES	NO	NO

NOTE
YES ..... Continuity
NO ..... Discontinuity

Table 2

(4) Checking of the Operation Pushbutton

The operating switch is in good working condition if there is continuity between No. 4 (placing the negative (—) probe and No. 9 (placing positive (+) probe) while the pushbutton is pressed.

(5) Checking of the Timer

Measure the continuity between No. 1, 2, 3, 4, and No. 8 (placing the positive (+) probe).

Connector No.	Position of the Selector											
	1	2	3	4	5	6	7	8	9	10	11	12
8 — 4	—	—	—	—	—	—	—	—	Y	Y	Y	Y
8 — 3	—	—	—	—	Y	Y	Y	Y	Y	Y	Y	Y
8 — 1	—	—	Y	Y	Y	Y	—	—	—	—	Y	Y
8 — 2	—	Y	Y	—	—	Y	Y	—	—	Y	Y	—

Y for YES = There is continuity.

Table 3

(6) Checking of the Thermostat

Measure the continuity between No. 1, 2, 3, 4, and No. 7 (placing the positive (+) probe).

Connector No.	Position of the Selector										
	63	65	67	69	71	73	75	77	79	81	83
7 — 4	—	—	—	—	—	Y	Y	Y	Y	Y	Y
7 — 3	—	Y	Y	Y	Y	Y	Y	Y	Y	—	—
7 — 1	Y	Y	Y	—	—	—	—	Y	Y	Y	Y
7 — 2	—	—	Y	Y	—	—	Y	Y	—	—	Y

Y for YES = There is continuity.

Table 4

If there is abnormality during checking at any of the above step from (1) to (6), replace the remote control unit as it is.

CAUTION:

Do not disassemble the Remote Control Unit.

It is supplied as a complete assembly and is carefully adjusted in the factory by skillful workmanship. Inexperienced disassembly will cause trouble and malfunction in the unit.

Downloaded from www.Manualslib.com manuals search engine

10. Checking of the Remote Control Unit Proper

1) CAUTION Use of the Test Switch (TEST RUN)

The position of the switch which is used to operate the air conditioner for a room temperature below 65°F (18.3°C) is the position of the switch for this TEST RUN.
If this operation is continued for a long time, there would be a bad effect on the air conditioner because of over-cooling. Therefore, use this switch only for checking, and in any case, **DO NOT KEEP ON COOLING FOR MORE THAN 15 MIN. UNDER TEST RUN MODE.**

When the checking is over, **TURN THE SWITCH BACK TO ITS ORIGINAL POSITION (=RUN) WITHOUT FAIL.**

REFERENCE TEST RUN
Check that all tubing and wiring have been completed correctly. Check again that wide and narrow tube service valves are fully opened. Turn on power and run the unit.

Downloaded from www.Manualslib.com manuals search engine

NOTE

If the room temperature is too low, cooling operation may not be possible even if the thermostat knob is set at the lowest position.
In this event, perform test run as follows:

① Pull off the thermostat knob. Fig. 8
② Set the thermostat lever to the lowest position. (The central position of the lever becomes the TEST RUN position.) Fig. 9
③ Press OPERATION "ON" button to start the air conditioner.
④ After completion of test run, press "OFF" button to stop the unit.
⑤ Reinstall the thermostat knob. (The stopper position facing down.)

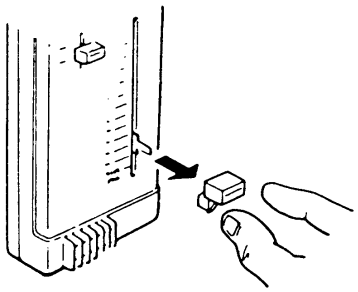

Fig. 8

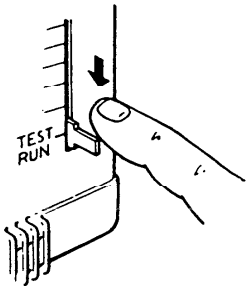

Fig. 9

2) Checking of the Items of the Remote Control Unit

At first, pull out the connector (7P) of the remote control unit from the controller PCB of the unit Fig. 10.

① Fan Speed Selector
Check the continuity of the connector No. 3 against No. 4 (placing the negative (–) probe on No. 4 and positive (+) probe on No. 3.) Table-5

Checking points	Position of the selector	
	High	Low
3 — 4	NO	YES

Table

NOTE YES.....Continuity
NO.....Discontinuity

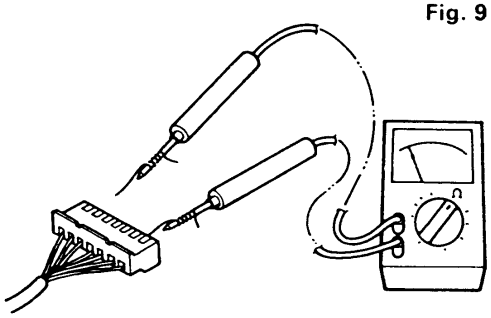

Fig. 10

② Auto Deflector Motor

Checking points	ON	OFF
3 — 6	YES	NO

Table 6

③ Checking of the Operation Pushbutton
The operating switch is in good working condition if there is continuity between No. 2 (placing the negative (–) probe) and No. 3 (placing positive (+) probe) while the pushbutton is pressed.

CAUTION Do not disassemble the Remote Control Unit.
It is supplied as a complete assembly and is carefully adjusted in the factory by skillful workmanship. Inexperienced disassembly will cause trouble and malfunction in the unit.

Downloaded from www.Manualslib.com manuals search engine

11. Checking of the Remote Control Unit Proper

A. Caution: Use of the Test Switch
(TEST RUN)

The position of the switch which is used to operate the air conditioner for a room temperature below 69°F (21°C) is the position of the switch for this TEST RUN.

If this operation is continued for a long time, there would be a bad effect on the air conditioner because of over-cooling. Therefore, use this switch only for checking, and in any case, **DO NOT KEEP ON COOLING FOR MORE THAN 15 MIN. UNDER TEST RUN MODE.**

When the checking is over, **TURN THE SWITCH BACK TO ITS ORIGINAL POSITION (= RUN) WITHOUT FAIL.**

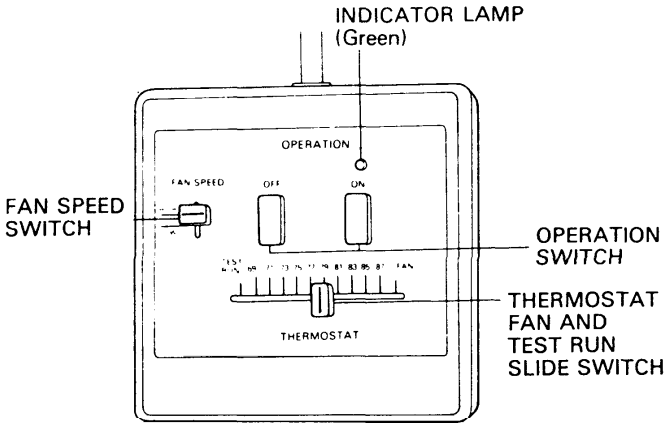

Fig. 11

REFERENCE TEST RUN

Check that all tubing and wiring have been completed correctly. Check again that wide and narrow tube service valves are fully opened. Turn on power and run the unit.

NOTE :

If the room temperature is too low, cooling operation may not be possible even if the thermostat knob is set at the lowest position.
In this event, perform test run as follows:

a) Pull off the thermostat knob. Fig. 12.
b) Set the thermostat lever to the lowest position. (The central position of the lever becomes the TEST RUN position.) Fig. 13.
c) Press OPERATION "ON" button to start the air conditioner.
d) After completion of test run, press "OFF" button to stop the unit.
e) Reinstall the thermostat knob. (The stopper position facing down.)

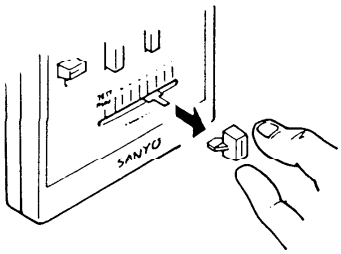

Fig. 12

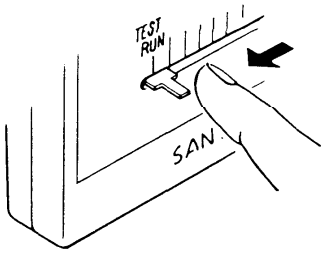

Fig. 13

Downloaded from www.Manualslib.com manuals search engine

B. Checking of the Items of the Remote Control Unit

At first, pull out the connector (7P) of the remote control unit from the controller PCB of the unit (refer to Fig. 14).

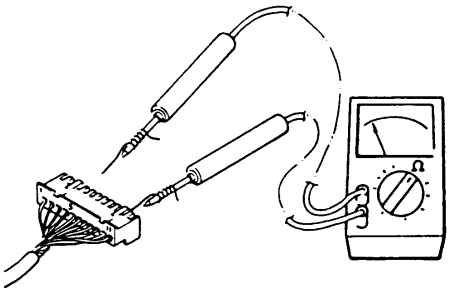

Fig. 14

(1) Fan Speed Selector
Check the continuity of the connector No. 3 against No. 4 (place the negative (−) probe on No. 4 and positive (+) probe on No. 3.

Checking points	Position of the selector	
	High	Low
3-4	NO	YES

Table 7

NOTE: YES . . . . . .Continuity
NO . . . . . Discontinuity

(2) Checking of the Operation Pushbutton
The operating switch is in good working condition if there is continuity between No. 2 (placing the negative (−) prove and No. 3 (placing positive (+) probe) while the pushbutton is pressed.

CAUTION:
Do not disassemble the Remote Control Unit.
It is supplied as a complete assembly and is carefully adjusted in the factory by skillful workmanship. Inexperienced disassembly will cause trouble and malfunction in the unit.

Downloaded from www.Manualslib.com manuals search engine

12. Checking of the Continuity of Fuse on the P.C.B. Ass'y

Check the continuity by the multimeter as shown in Fig. 15.

If it is difficult to check in this way, remove the lamp board ass'y connector and then check it.

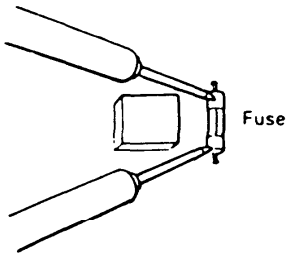

Fig. 15

NOTE **Method to Replace Fuse on the P.C.B. Ass'y**

1. Remove the P.C.B. ass'y.
2. Pull out the fuse at the metal clasp by a pair of pliers while heating the soldered leads on the back side of the P.C.B. ass'y with a soldering iron (30W or 60W). Fig. 16.
3. Remove the fuse ends one by one. For replacement, insert a fuse of the same rating and solder it.
   (Allow time to radiate heat during soldering so that the fuse does not melt).

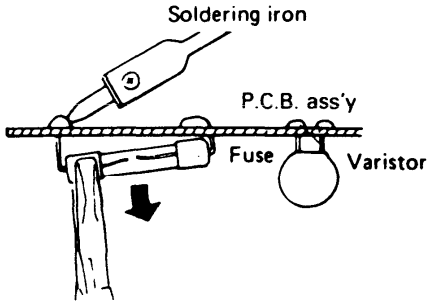

Fig. 16

CAUTION Be sure to replace the varistor adjacent to the fuse when the fuse is blown.

13. Checking of the Output of the P.C.B. Ass'y for Fan Motor Terminals

Take out the fan motor connector from P.C.B. Ass'y and be sure that there is no danger of short circuit in other parts before supplying electricity to the unit. After that, supply electricity to the unit and set the selector to "MANUAL". Then, turn on the operation switch.
Now measure the voltage between these pins by the multimeter. The P.C.B. Ass'y is in good working condition if the voltage output becomes same as those shown in the below tables.

SAP243TL/SAP243RL

Pair of Pins	FAN	
	Low	High
1 - 2	*	0
1 - 3	0	*

* Line voltage

Table 8

KL2412

Pair of Pins	FAN		
	Low	Med.	High
1 — 4	*	0	0
1 — 2	0	*	0
1 — 3	0	0	*

* Line voltage

Table 9

Downloaded from www.Manualslib.com manuals search engine

14. Checking of the IC (Solid State Relay)

When circuit breaker is set to OFF, checking of the IC is difficult.

Is output (between No. 3 and No. 4 or between No. 5 and No. 4) of PCB Ass'y normal? Fig. 17.
Is output of LOAD side normal? (The voltage between terminal No. 1 of IC and terminal plate No. 2 is line voltage.)

G3L-205TL-TS1

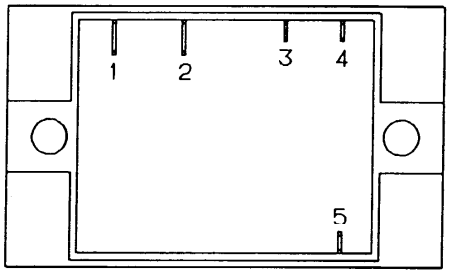

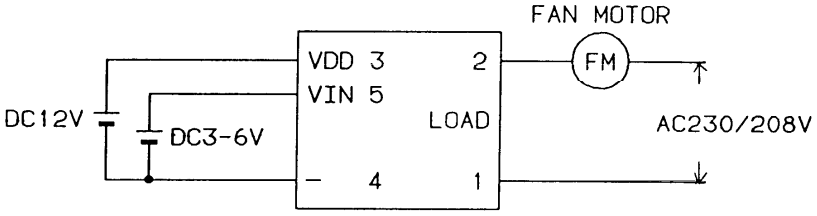

Fig. 17

Downloaded from www.Manualslib.com manuals search engine

15. DISASSEMBLY PROCEDURES

— Quick Access Index —

INDOOR UNIT 24KL12

1. Casing - Removal 100
2. Electrical Component Box 100
   - Access and Removal -
3. Evaporator (Indoor Heat Exchenger) - Removal 101
4. Fan and Fan Motor - Removal 102

INDOOR UNIT SAP243TCL

1. Side Panel - Removal 103
2. Suction Grille - Removal 103
3. Electrical Component Box - Removal 103
4. Drain Pan - Removal 105
5. Fan - Removal 106
6. Fan Motor - Removal 107

INDOOR UNIT SAP243RCL

1. Electrical Component Box 109
   - Access and Removal -
2. Ceiling Panel - Removal 110
3. Fan and Fan Motor - Removal 110
4. Control Switch Unit - Removal 112

OUTDOOR UNIT CL2412/SAP243CL

1. Cabinet - Removal 113
2. Fan and Fan Motor - Removal 113
3. Electrical Component Box - Removal 114
4. Compressor Cover - Removal 114
5. Compressor - Removal 115

Downloaded from www.Manualslib.com manuals search engine

INDOOR UNIT

1. Casing — Removal

KL2412W

1) Remove three screws holding the casing to the indoor unit.
2) Pull up the casing by hand, press down on tabs on top, then withdraw the casing by pulling it back straight. Fig. 1.

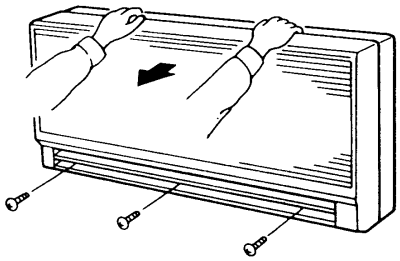

Fig. 1

2. Electrical Component Box — Access and Removal

1) Remove casing.

CAUTION : Before accessing inside the electrical component box, be sure to check that power to the unit is disconnected.

2) In case of KL2412W, remove the cover plates Ⓐ and Ⓑ by unfastening a screw.
3) Disconnect the interunit wires from the terminal plate.
4) Remove or loosen the connector socket and lead wires.

CAUTION

Do not apply an excessive force when removing the connector socket or lead wires.

5) Unfasten the screws in accordance with Fig. 2.

The electrical component box can be pulled out.

KL2412W

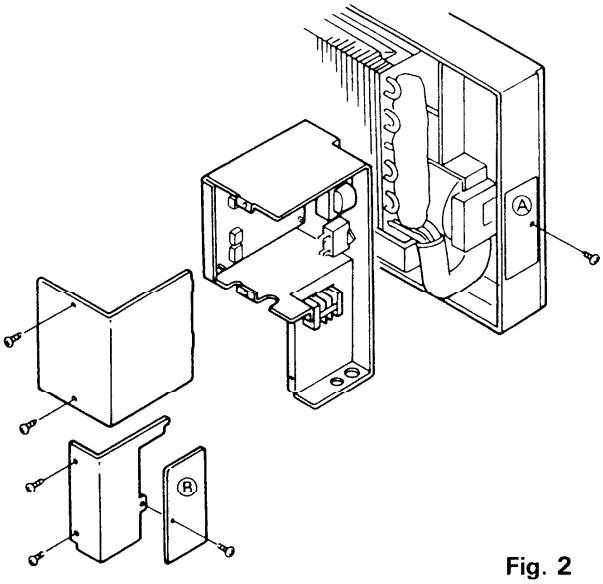

Fig. 2

Downloaded from www.Manualslib.com manuals search engine

3. Evaporator (Indoor Heat Exchanger) and Drain Pan—Removal

KL2412W

1) Remove the electrical component box.
2) Remove the refrigerant piping holder Ⓐ.
3) The drain pan can be pulled out after removing the screws shown in Fig. 3.
4) Loosen the fixing screws of the evaporator mounting plates Ⓑ and Ⓒ, and remove them respectively.
5) Lift up the evaporator with both hand, then withdraw the evaporator together with the piping.

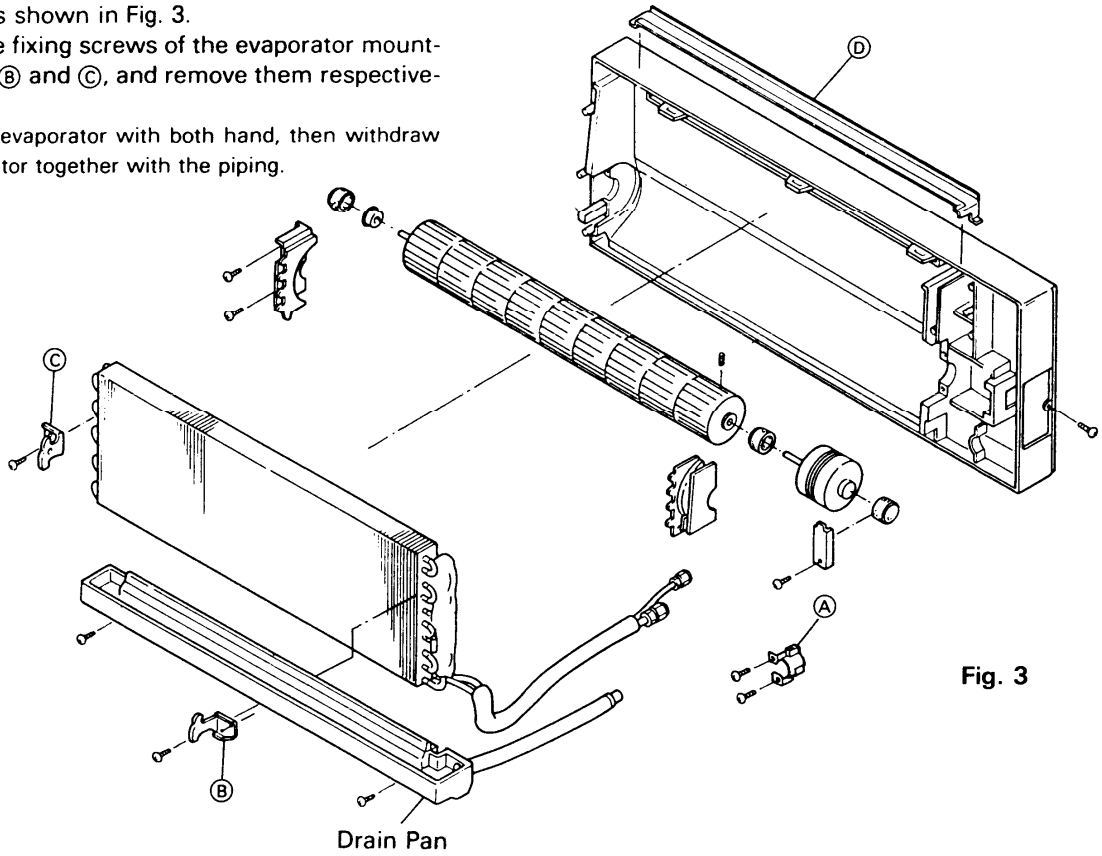

Fig. 3

Downloaded from www.Manualslib.com manuals search engine

4. Fan and Fan Motor—Removal

KL2412W

1) As shown in Fig. 4. loosen the screws of the plastic mounting plates Ⓐ, Ⓑ and Ⓒ which secure the fan, then remove the fan and fan motor.
2) When withdrawing the fan from the motor, first loosen the fan fixing bolts using a hexagonal key.
3) Withdraw the Bearing Ass'y Ⓓ retaining the left side of the fan, by hand, then pull the fan to the left and withdraw it from the motor shaft.

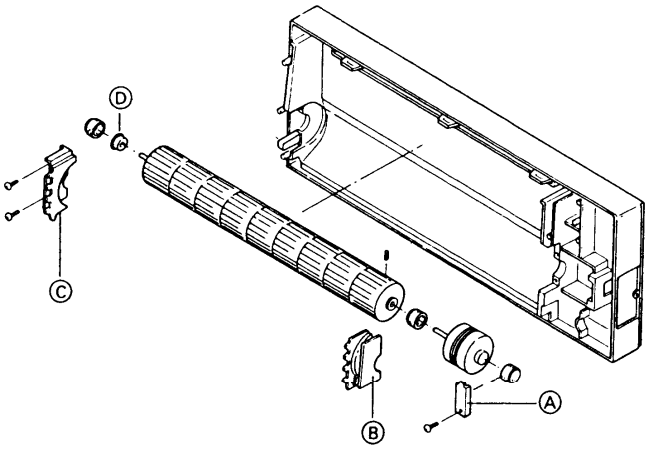

Fig. 4

Downloaded from www.Manualslib.com manuals search engine

INDOOR UNIT SAP243TL

1. Side Panel — Removal

(1) Remove the four screws (a) of the cover plate on the underside.
(2) Slide the side panels on both sides towards the front (b) of the unit in order to remove them. Fig 1

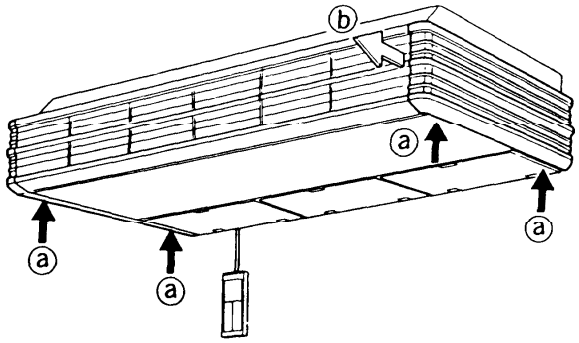

Fig. 1

2. Suction Grille — Removal

(1) The suction grille opens when the tab (a) of the suction grille is pulled.
(2) Raise the suction grille lightly and shift it in the direction of the arrows (b) to remove it from the hooks. Fig.2

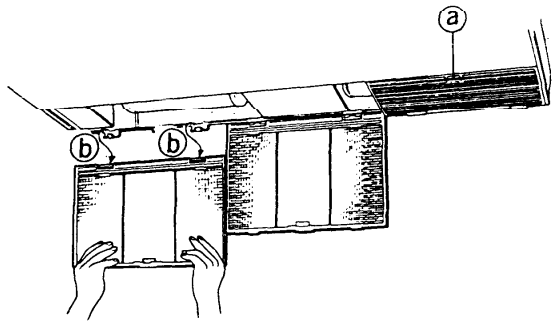

Fig. 2

3. Electrical Component Box — Removal

(1) Remove the two screws (a) of the electrical component box, and remove the cover plate.
(2) When the three screws (b) are removed, the electrical component box can be pulled out to the lower side of the unit. (The one other screw (b) is at the rear between box and casing) Fig.3

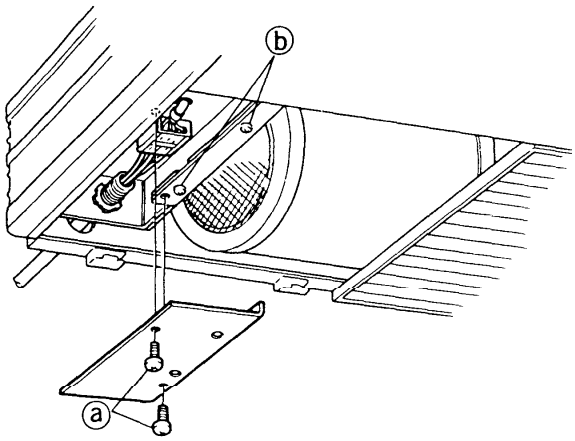

Fig. 3

Downloaded from www.Manualslib.com manuals search engine

(3) Remove the four screws (a) holding the wiring.
(4) Cut the wire bundling plastic tie (b) without damaging the wires.

NOTE

After the disassembly, use vinyl tape instead of the plastic to bundle the wires at the same place.

(5) When the two fixing screws (c) are removed, the electric protection cover can be removed. Fig.4

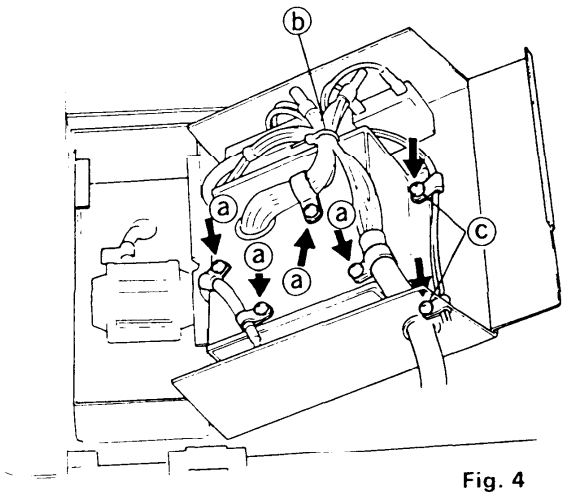

Fig. 4

(6) The electrical components in the electrical component box all can be checked in this condition. Fig. 5

NOTE

For checking of the electrical components, refer to "CHECKING AND REPLACING ELECTRICAL COMPONENTS, page 86"

① Terminal base
② Fixed capacitor
③ Transformer assembly
④ Controller

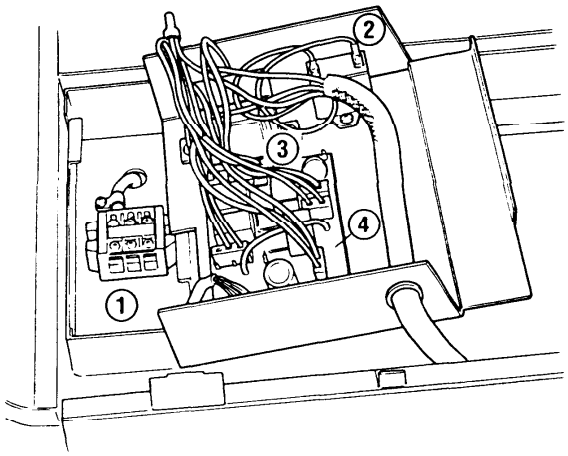

Fig. 5

Downloaded from www.Manualslib.com manuals search engine

4. Drain Pan — Removal

(1) Remove the drain pipe.
(2) Remove the suction grille from the unit body.
(3) Remove the four screws (a) fixing the fan motor cover. Fig. 6

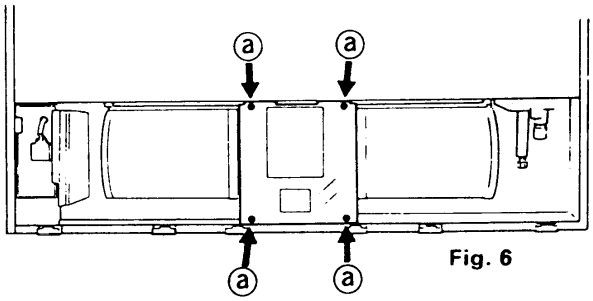

Fig. 6

(4) Slide the discharge grille at the unit front about 0.38" to the side, remove it, and remove the screw (black color) at the center on the inside.
(5) Remove the four screws (a) at the lower part on both sides. Fig. 7

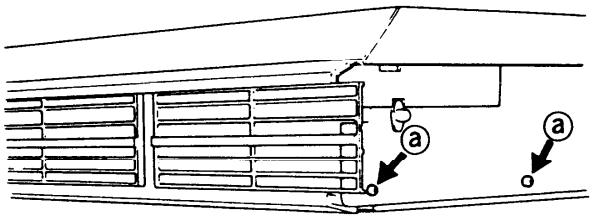

Fig. 7

(6) Remove the five screws (a) fixing the bottom plate and the partition plate.
(7) Remove the drain pan in this condition.
(8) Remove the two screws (b) to remove the rear panel (A). Fig. 8

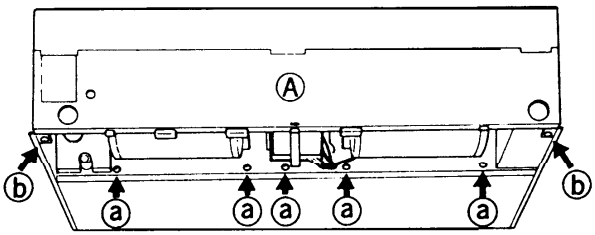

Fig. 8

Downloaded from www.Manualslib.com manuals search engine

(9) As the drain pan is made of foamed styrene, take care not to damage the inside.
Damage becomes the cause for water leakage.
Fig. 9

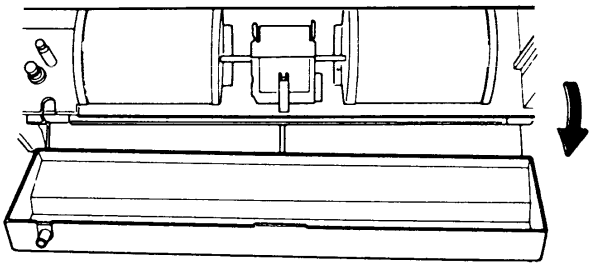

Fig. 9

5. Fan — Removal

(1) Remove the four screws (a) fixing the fan casing.
(2) Rotate the fan casing for 90° in the direction of the arrows (b). Fig. 10

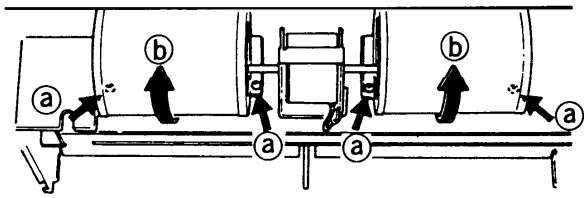

Fig.10

(3) Loosen the screw (a) fixing the fan boss on the motor shaft with a screwdriver.
(4) In this condition, slide the fan and the fan casing together to the side for removal from the motor shaft.
Fig. 11

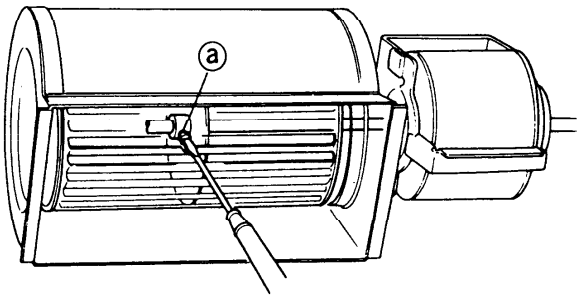

Fig. 11

Downloaded from www.Manualslib.com manuals search engine

(5) The fan can be removed as shown in the figure when the four screws (a) fixing the back plate of the fan casing are removed. Fig. 12

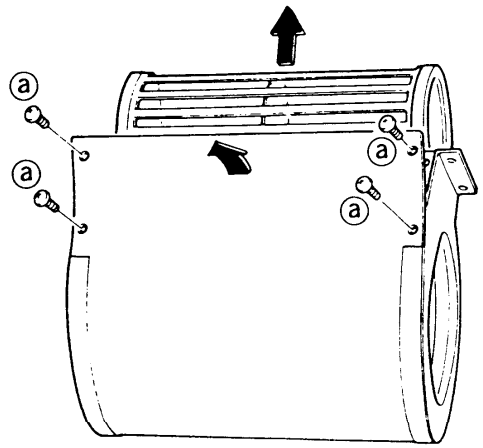

Fig. 12

6. Fan Motor — Removal

(1) Remove the four nuts (a) fixing the motor stand. Fig. 13

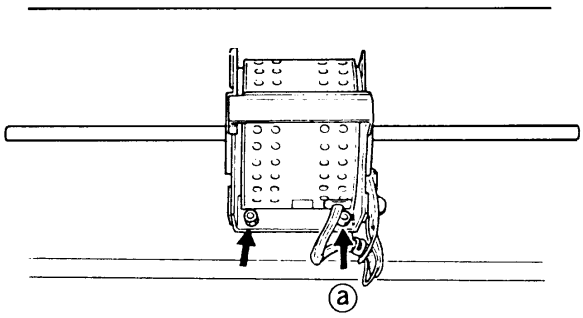

Fig. 13

(2) The fan motor stand is taken out as shown in the figure. Fig. 14

NOTE

Take care not to apply a strong force onto the motor wiring.

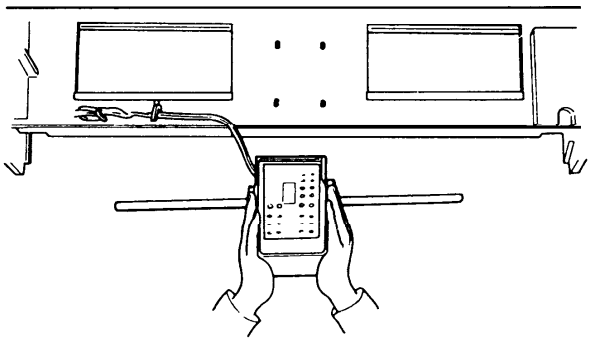

Fig. 14

Downloaded from www.Manualslib.com manuals search engine

(3) Remove the four screws (a) fixing the motor. Fig. 15

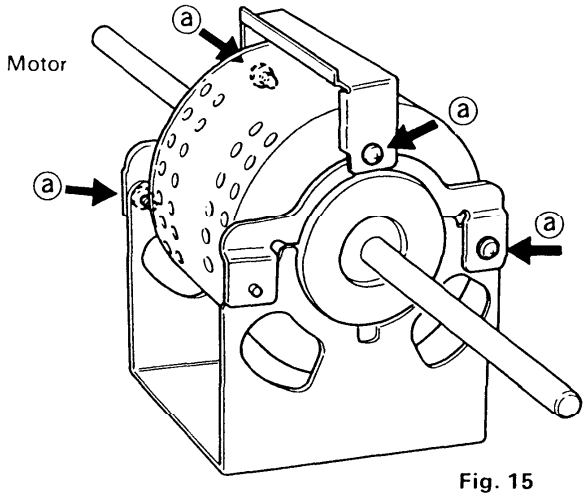

Fig. 15

(4) Open the fixing arms as shown in the figure.
Then the fan motor can be removed from the fan motor stand. Fig.16

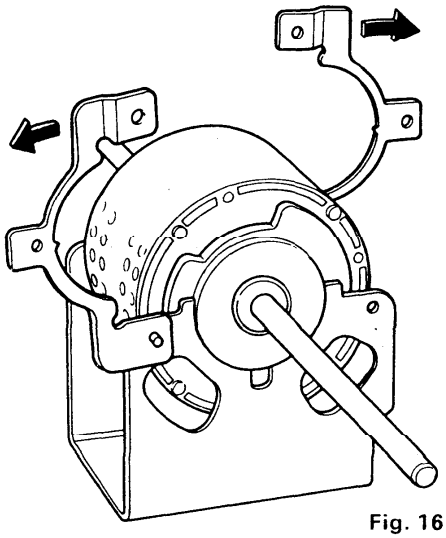

Fig. 16

Downloaded from www.Manualslib.com manuals search engine

INDOOR UNIT SAP243RL

1. Electrical Component Box — Access and Removal

① Lift the air intake panel slightly upward and then slide it in the direction shown by arrow (A).
② To remove the air filter, grasp the filter tabs and pull them downwards (arrow (B). Fig.1

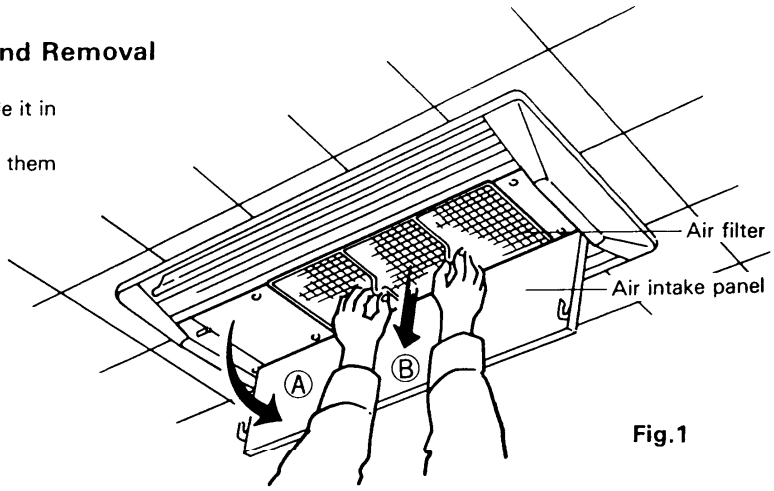

Fig.1

③ The electrical component box becomes accessible when the cover (A) (black color) is removed. Fig.2

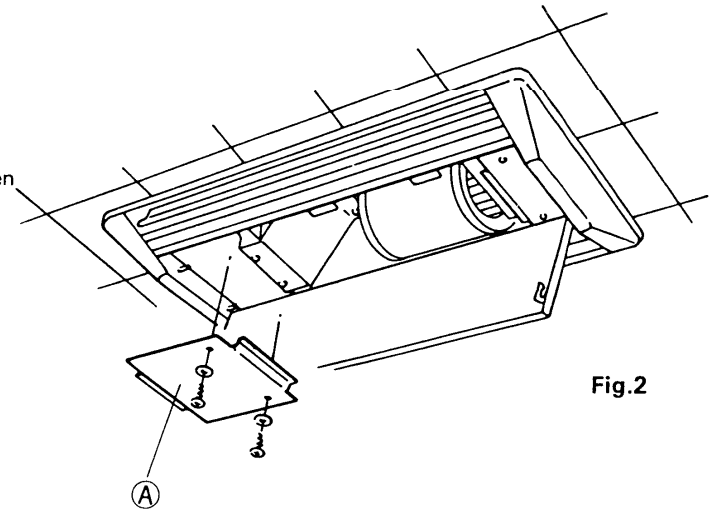

Fig.2

④ Remove the cover plates ① and ② of the electrical component box. Fig.3

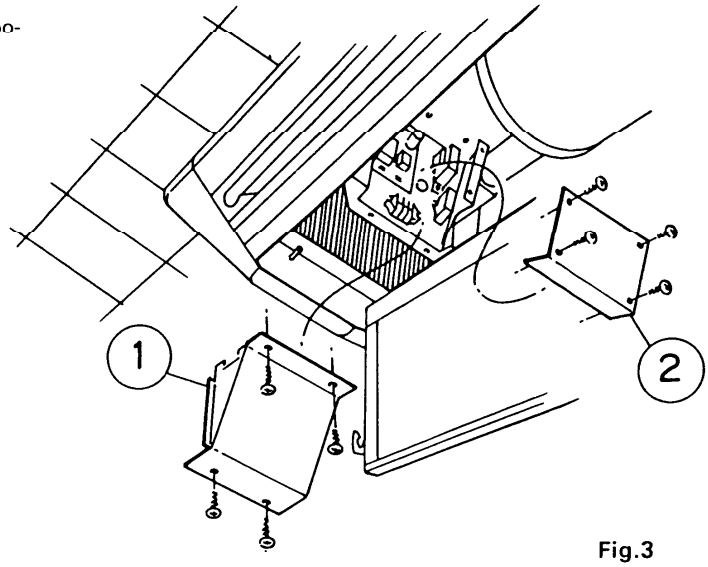

Fig.3

Downloaded from www.Manualslib.com manuals search engine

⑤ The electrical components can be checked in this condition.
⑥ For removal of the electrical component box, remove the four screws shown by the arrows. (A) Fig.4.

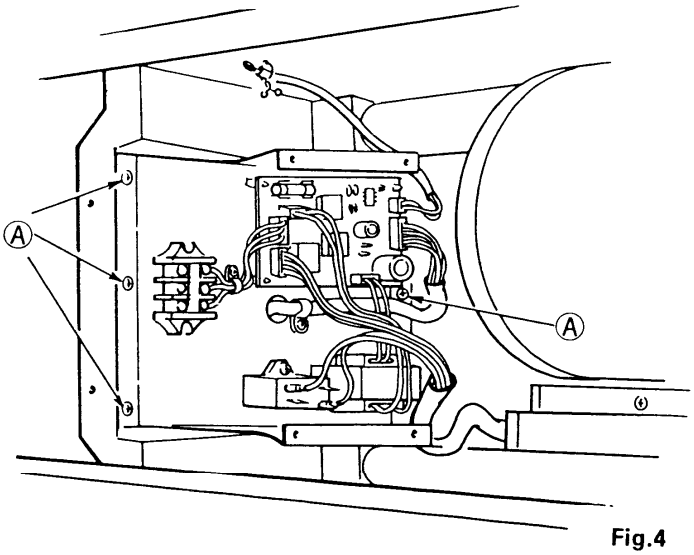

Fig.4

[CAUTION]
Do not use excessive force for removal of connector sockets or lead wires.

2. Ceiling Panel — Removal

① Loosen the four screws (C) (black color).
② The ceiling panel screw heads have a special shape as shown in the figure.
Slide the entire ceiling panel to the side. The ceiling panel can be removed when the screw heads have moved from (A) to (B). Fig 5.

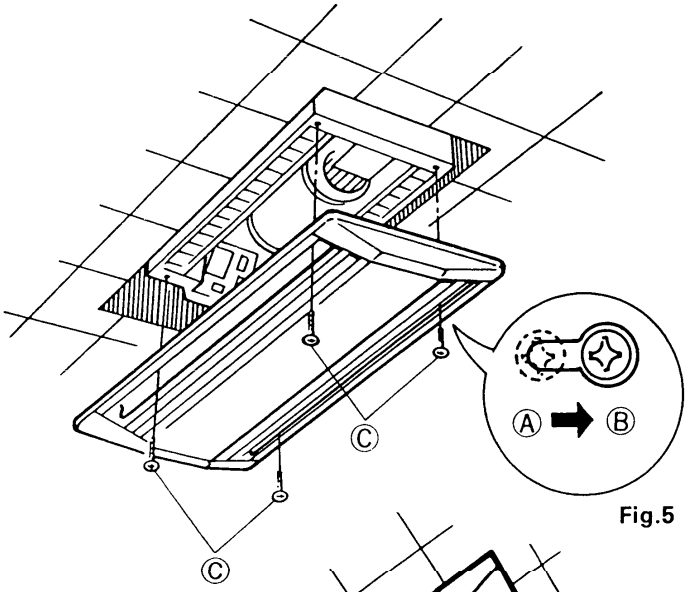

Fig.5

[CAUTION]
Support the ceiling panel at the time of removal, so that it will not drop down.

3. Fan and Fan Motor — Removal

① Remove the cover (A), (B), and (C). Fig. 6

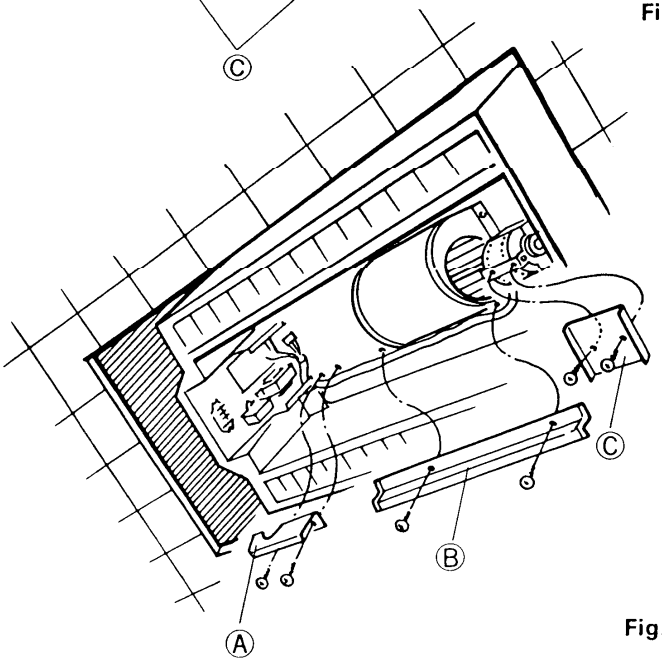

Fig. 6

Downloaded from www.Manualslib.com manuals search engine

② Remove the four screws (A) fixing the fan casing.
③ When the four nuts (B) fixing the fan motor installation base are removed, removal is possible as shown in the figure. Fig. 7.

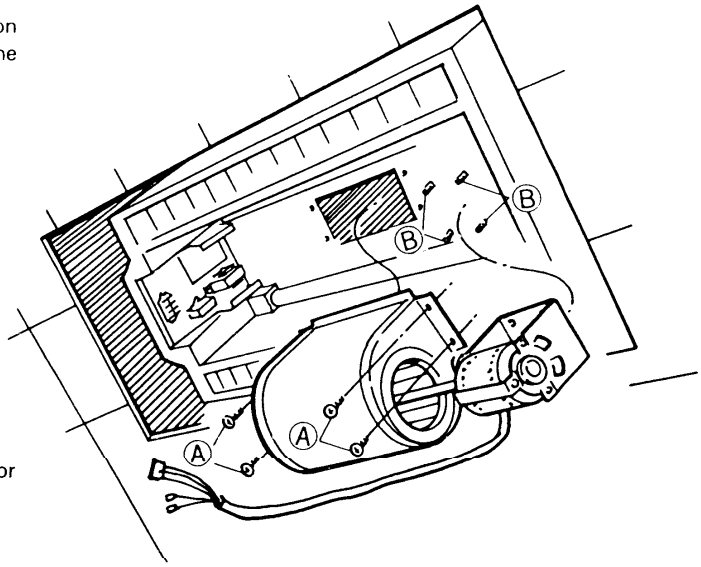

Fig.7

[CAUTION]
At the time of removal, take care not to drop the fan motor etc.

④ Loosen the bolt (A) fixing the fan boss on the motor shaft.
⑤ Pull the motor shaft from the fan. Fig.8.

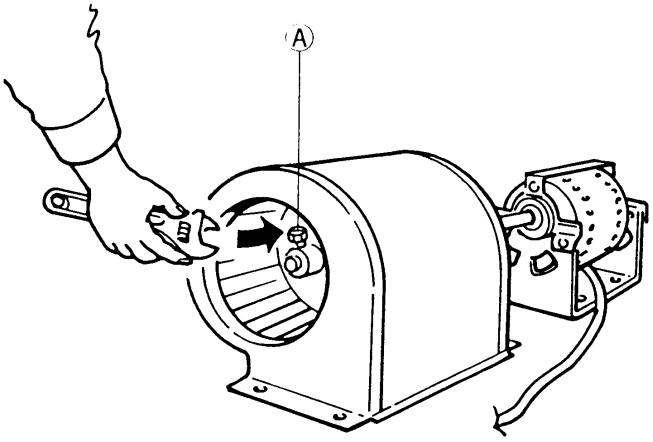

Fig.8

⑥ When the four screws (A) around the nozzel circumference are removed as shown in the figure, the fan can be removed. Fig.9

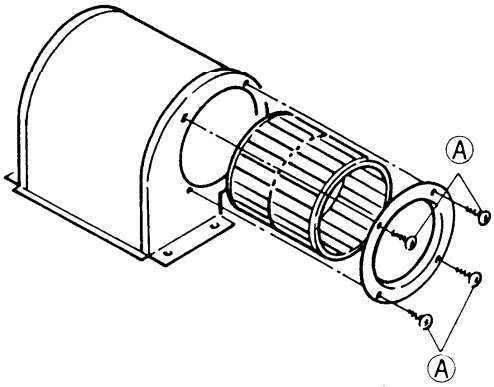

Fig.9

Downloaded from www.Manualslib.com manuals search engine

⑦ When the four screws (A) are removed as shown in the figure, the fan motor can be removed. Fig. 10.

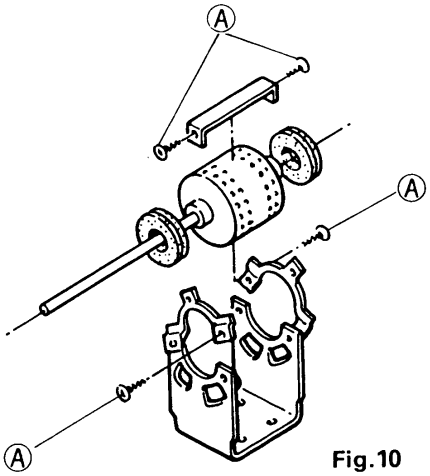

Fig.10

4. Control Switch Unit — Removal

① Remove the two knobs ①.
② When the screwdriver ② is inserted for about 1/8" into the notch of the control name plate ③ and raised to the front, the name plate can be removed.

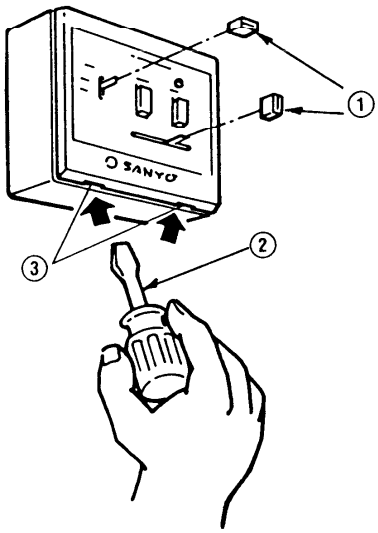

Fig. 11

③ When the four screws ④ are removed, the cover plate ⑧ and the control switch PCB assebly ⑤ can be separated from the box.
The control switch unit can be checked in this condition.
④ For removal of the control switch PCB assembly ⑤, removed the connection of the lead wires ⑥ and remove the four screws ⑦. Fig.12.

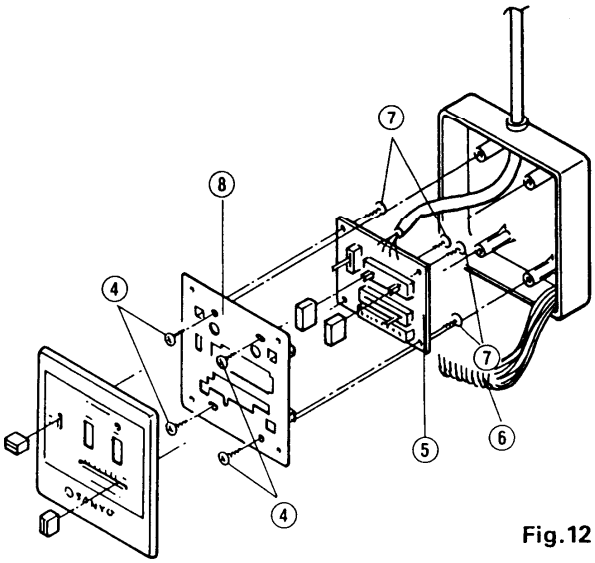

Fig.12

Downloaded from www.Manualslib.com manuals search engine

OUTDOOR UNIT CL2412/SAP243CL

1. Cabinet-Removal

1) Remove the outer panels in the order of front panel, side panel Ⓐ, and side panel Ⓑ.
2) Remove the cover plates Ⓒ and Ⓓ.
3) Remove the mounting plate. Fig. 1.

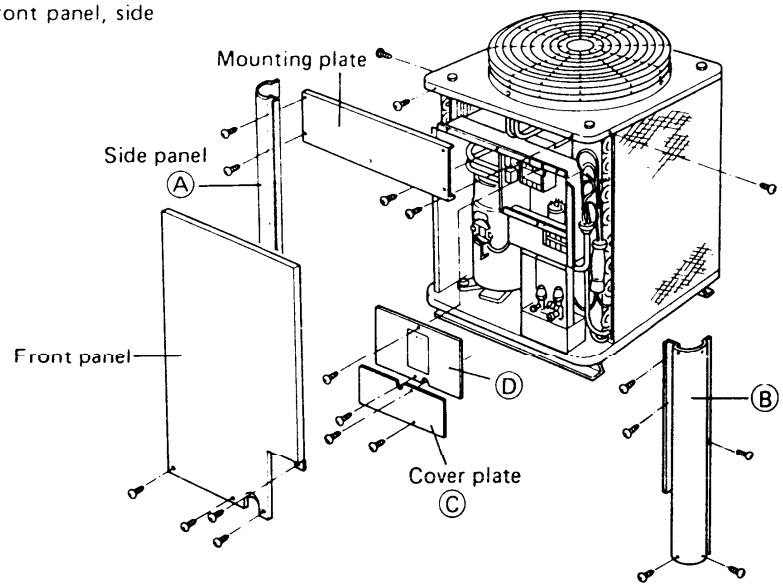

Fig. 1

2. Fan and Motor-Removal

1) Remove the guard first, and then remove two bolts ⓐ of the propeller fan to remove the propeller fan by lifting it up.
2) Remove the fan motor wire from the electrical component box, and remove the top cover with the fan motor fixed to the top cover. Fig. 2.

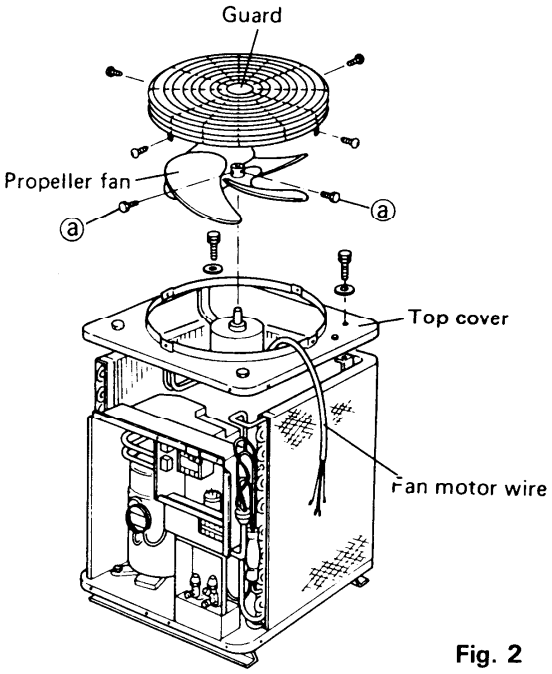

Fig. 2

Downloaded from www.Manualslib.com manuals search engine

3. Electrical Component Box-Removal

(1) Disconnect the following wires from the electrical component box.
   1. Compressor wire
   2. Crankcase heater wire

(2) Remove the cover plate Ⓐ and the sensor Ⓑ.

(3) The electrical compoent box can now be removed by unscrewing one screw Ⓒ. Fig. 3.

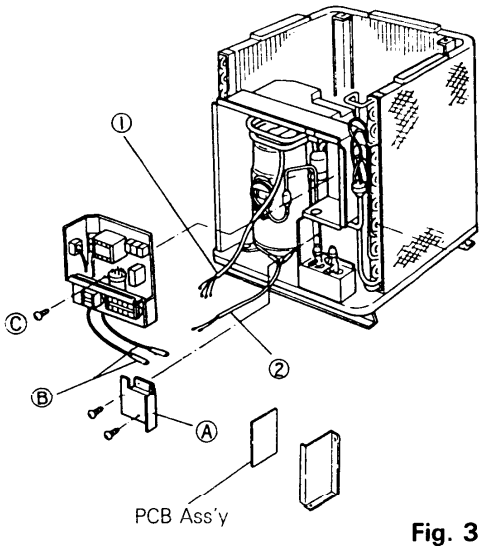

Fig. 3

4. Compressor Cover-Removal

Unfasten four screws fixing the cover Ⓐ. The cover can be removed by lifting it upward. Fig. 4.

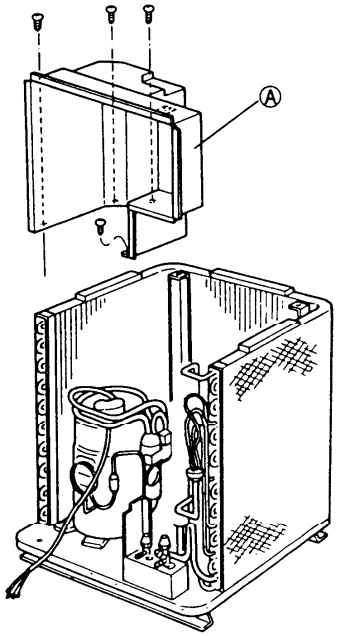

Fig. 4

Downloaded from www.Manualslib.com manuals search engine

5. Compressor-Removal

Take apart three joints Ⓐ, Ⓑ and Ⓒ brazed to the compressor by brazing torch Fig. 5.

CAUTION

1) Many wires have to be removed. When removing wires, carefully check the electric diagram on the rear side of the cover plate Ⓓ Fig. 9.
   Reconnect the wires correctly after replacing the compressor.
2) Three sections of the replacement compressor Ⓐ, Ⓑ and Ⓒ are sealed to avoid entry of dust and water. Remove this seals, then connect to the unit tubing when replacing the compressor Fig. 6.

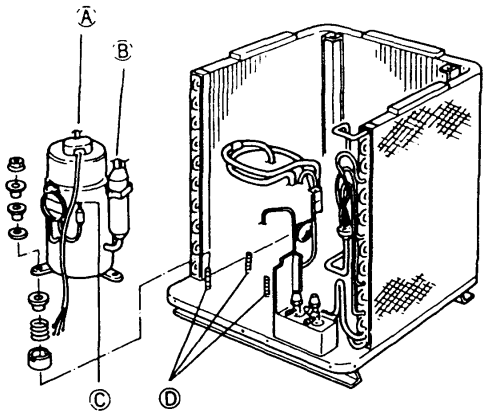

Fig. 5

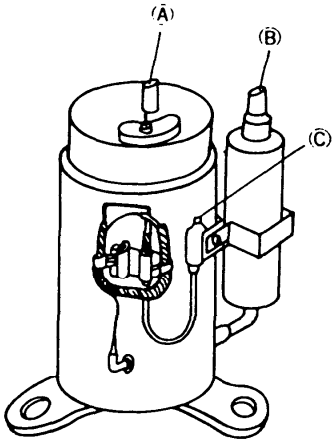

Fig. 6

Downloaded from www.Manualslib.com manuals search engine

16. PARTS LIST

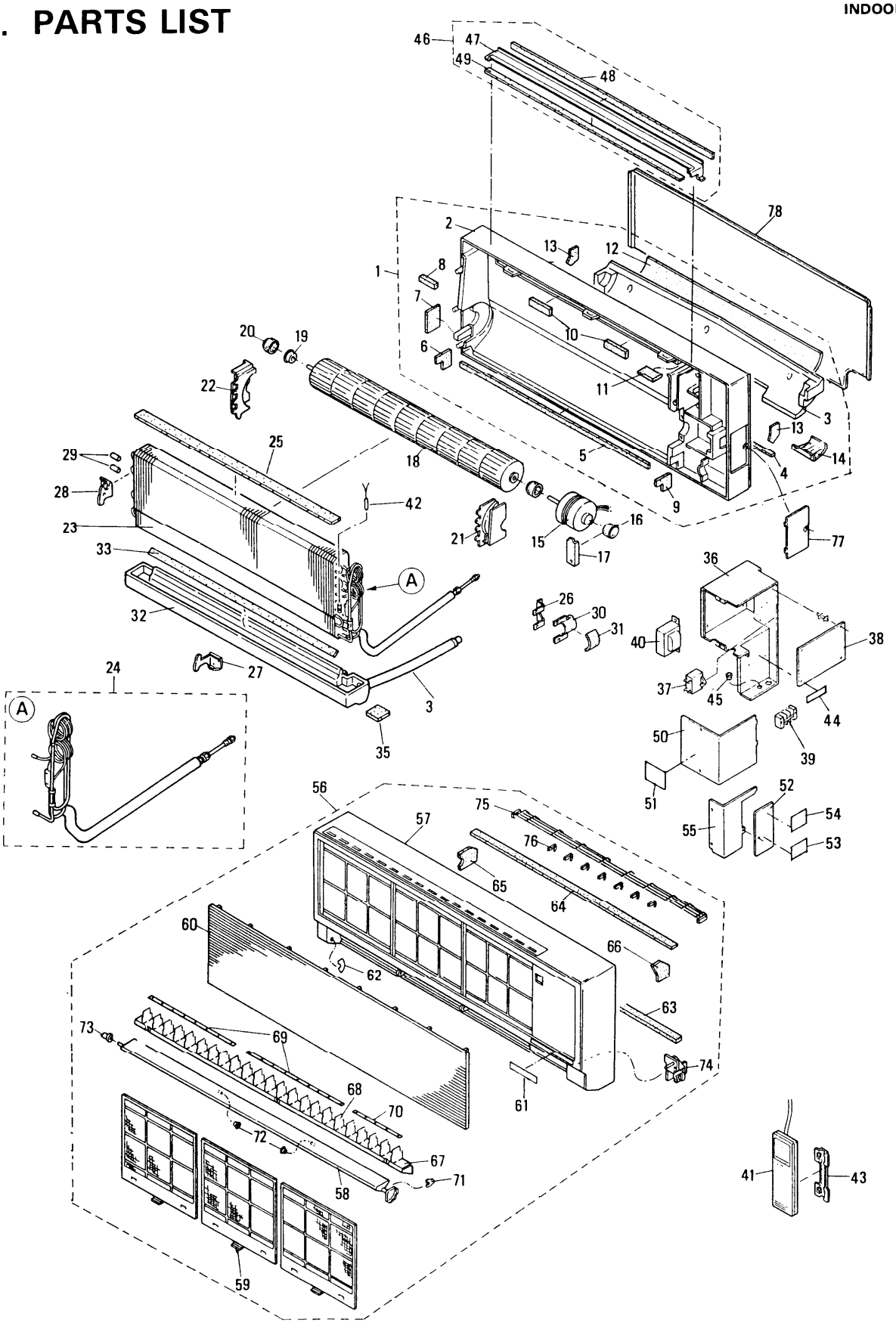

Downloaded from www.Manualslib.com manuals search engine

ATTENTION !

To ensure correct parts supply, please let us know followings, when you make service parts order:

1. Part No. 2. Description 3. Q'ty 4. Volts-Hz-Ph 5. Product Model No.

Key No.	Part No.	Description	Q'ty	Reference No.
1	623 096 8592	Frame Ass'y (incl. No. 2~14)	1	854-2-2250-101H5
2	623 108 1139	Frame Ass'y	1	854-2-2250-10130
3	623 108 1146	Insulation, Rear Cover	1	854-2-1406-34710
4	623 108 1153	Insulation	1	854-2-1403-14010
5	623 108 1160	Insulation	1	854-2-1403-14110
6	623 108 1177	Insulation	1	854-2-1403-14210
7	623 108 1184	Insulation	1	854-2-1403-14310
8	623 108 1191	Insulation	1	854-2-1403-14410
9	623 108 1207	Insulation	1	854-2-1403-14510
10	623 108 1214	Insulation	2	854-2-1403-14610
11	623 108 1221	Insulation	1	854-2-1403-14710
12	623 096 8608	Insulation, Rear Cover	1	854-2-1406-35210
13	623 108 1238	Insulation	2	854-2-1403-14810
14	623 050 5995	Mounting Plate	2	852-2-2309-38801
15	623 107 5206	Fan Motor KFH4Q-31A6P	1	525-0-0000-31806
16	623 092 9463	Cushion Rubber	2	854-2-2534-14000
17	623 096 4600	Mounting Plate, Fan Motor	1	854-2-2513-18110
18	623 092 9487	Cross-Flow Fan Ass'y	1	854-0-2501-19700
19	623 042 0069	Bearing Housing Ass'y	1	852-0-2510-11900
20	623 053 2182	Cushion Rubber, Fan Motor	1	852-2-2511-13600
21	623 096 4617	Cover Plate	1	854-2-2342-33310
22	623 096 4624	Cover Plate	1	854-2-2342-33410
23	623 096 4631	Evaporator Ass'y	1	854-0-4118-58600
24	623 108 8985	Tube Ass'y	1	854-0-4204-97700
25	623 096 8950	Insulation, Evaporator	1	854-2-2404-22210
26	623 092 9531	Mounting Plate	1	854-2-4134-36301
27	623 050 5636	Mounting Plate	1	852-2-2309-32701
28	623 050 5704	Mounting Plate	1	852-2-2309-33701
29	623 096 8967	Sleeve	2	854-2-2344-11000
30	623 092 9548	Mounting Plate	1	854-2-4134-36201
31	623 096 8974	Packing	1	854-2-2336-89910
32	623 096 4662	Drain Pan Ass'y (incl. No. 33)	1	854-0-2301-359H2
33	623 093 8120	Insulation	1	854-2-2401-67510
34	623 096 3931	Drain Pipe Ass'y	1	854-0-4297-13000
35	623 096 8981	Packing	1	854-2-2336-55810
36	623 096 4679	Elec. Component Box Ass'y	1	854-0-5301-40301
37	623 001 2066	Fixed Capacitor 440V 1.8MFD	1	4-2239-56255
38	623 092 9579	P.C.B. Ass'y POW-K243C5	1	851-0-5158-47100
39	623 096 3979	Terminal Base JTU20-3	1	4-2379-56227
40	623 096 4457	Transformer ATR-J122U	1	4-2519-56186
41	623 096 4037	Remote Control Switch RCS-K2412W	1	851-0-0051-36100
42	407 109 3800	Thermistor PTC-51H-S3	1	DHP-T-C-51-H-S3N
43	623 038 4095	Mounting Plate	1	851-2-5378-01001
44	623 060 3561	Label	1	852-6-4729-17300
45	623 038 3395	Bushing	1	851-2-5370-00500
46	623 096 4716	Partition Plate Ass'y (incl. No. 47~49)	1	854-2-2314-227H2
47	623 108 1290	Partition Plate	1	854-2-2314-22701
48	623 108 1306	Insulation Partition	1	854-2-2403-50110
49	623 108 1313	Insulation Partition	1	854-2-2403-50210
50	623 096 4723	Cover Plate	1	854-2-5304-32101

NOTE: Metal and plastic parts will be supplied basically with necessary heat insulation pads or packing.

Downloaded from www.Manualslib.com manuals search engine

ATTENTION !

To ensure correct parts supply, please let us know followings, when you make service parts order:

1. Part No. 2. Description 3. Q'ty 4. Volts-Hz-Ph 5. Product Model No.

Key No.	Part No.	Description	Q'ty	Reference No.
51	623 096 4730	Elec. Wiring Diagram	1	851-2-5251-68801
52	623 096 4747	Cover Terminal Ass'y (incl. No. 53, 54)	1	854-2-5305-124H1
53	623 084 8269	Label	1	854-6-4729-71600
54	623 074 1782	Label	1	854-2-1358-46700
55	623 096 4754	Cover Plate Ass'y	1	854-2-5304-322H1
56	623 096 6840	Grille Ass'y (incl. No. 57~76)	1	854-2-1150-101H5
57	623 108 8992	Grille Ass'y	1	854-2-1150-10110
58	623 096 8615	Flap	1	854-2-1515-10110
59	623 096 6871	Air Filter Ass'y	3	854-0-1302-14410
60	623 096 8622	Ornamental Plate	1	854-2-1308-25010
61	623 092 9081	Badge	1	854-2-1354-19701
62	623 093 5747	Label	1	854-2-1358-50801
63	623 108 1375	Insulation	1	854-2-1401-77110
64	623 108 1382	Insulation	1	854-2-1401-77210
65	623 108 1399	Insulation	1	854-2-1401-77310
66	623 108 1405	Insulation	1	854-2-1401-77410
67	623 096 4761	Ornamental Plate Ass'y (incl. No. 68-70)	1	854-2-1308-251H4
68	623 096 8639	Blade Air Guid	23	854-2-1520-14710
69	623 096 8646	Fastener Blade	4	854-2-1521-11710
70	623 096 8653	Fastener Blade	2	854-2-1521-11810
71	623 092 9647	Fastener Blade	1	854-2-1521-11601
72	623 096 3337	Mounting	2	852-2-1514-32502
73	623 049 1472	Mounting	1	852-2-1514-26802
74	623 096 4778	Mounting Plate, Blade	1	854-2-2524-10710
75	623 096 4785	Guard Ass'y	1	854-0-1113-14701
76	623 096 4792	Mounting Plate	7	852-2-1122-15301
77	623 096 4808	Cover Plate	1	854-2-1133-23010
78	623 092 9685	Hook Plate	1	854-2-1130-15101
•	623 109 2395	Installation Instructions	1	854-6-4139-75000
•	623 097 0014	Operation Manual	1	852-6-4119-85300

NOTE: Metal and plastic parts will be supplied basically with necessary heat insulation pads or packing.

Downloaded from www.Manualslib.com manuals search engine

CL2412
OUTDOOR UNIT

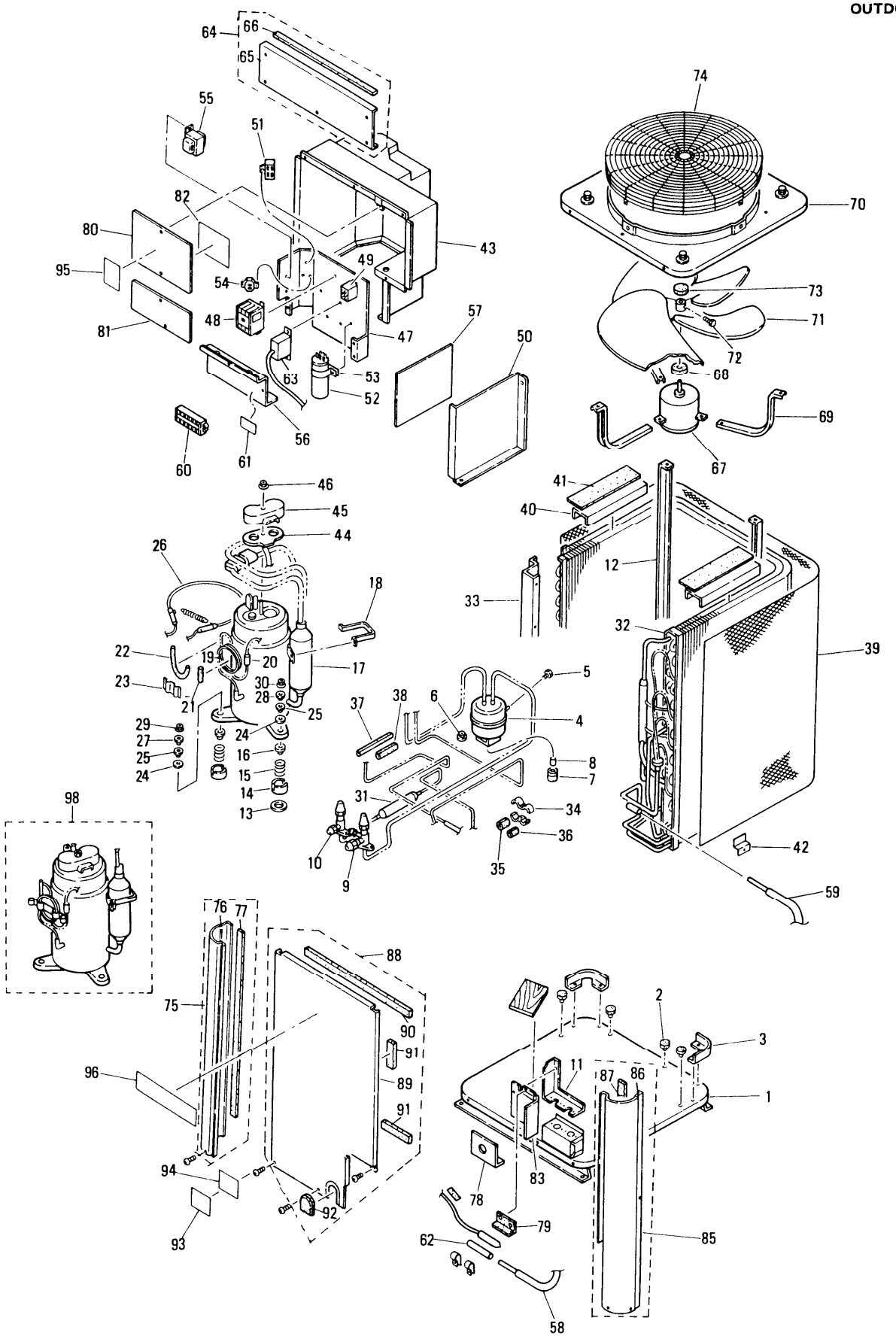

Downloaded from www.Manualslib.com manuals search engine

ATTENTION !

To ensure correct parts supply, please let us know followings, when you make service parts order:

1. Part No. 2. Description 3. Q'ty 4. Volts-Hz-Ph 5. Product Model No.

Key No.	Part No.	Description	Q'ty	Reference No.
1	623 067 4189	Bottom Plate Ass'y	1	854-0-2204-36101
2	623 073 3831	Sheet Rubber	4	854-2-1353-11000
3	623 078 5205	Mounting Plate	2	854-2-2360-19100
4	623 070 8495	Accumulator Ass'y	1	854-0-4517-19201
5	623 081 4554	Fusible Plug	1	854-2-4306-10600
6	623 029 6534	Nut Special Ass'y	1	851-0-2395-10501
7	623 077 2373	Cushion Rubber	1	854-2-2318-10600
8	624 081 8054	Sleeve	1	831-2-4307-10100
9	623 070 6156	Valve Ass'y 5/8 in.	1	854-0-4506-17900
10	623 070 9256	Valve Ass'y 1/4 in.	1	854-0-4521-12700
11	623 072 2798	Cover Plate	1	854-2-1133-17501
12	623 067 4936	Frame Ass'y	2	854-0-2206-18100
13	623 093 6423	Washer	1	3-9021-04100
14	623 035 0144	Cushion Rubber	3	851-2-2390-14000
15	623 034 5836	Spring	3	851-2-2330-13201
16	623 078 4819	Protection Rubber	3	854-2-2356-10500
17	623 070 8488	Accumulator Ass'y	1	854-0-4517-19100
18	623 034 9452	Band Mounting	1	851-2-2356-16901
19	623 096 9018	Capillary Tube	1	854-2-4231-31600
20	623 043 4059	Strainer Ass'y	1	852-0-4506-14000
21	623 051 0128	Packing	1	852-2-2353-19500
22	623 065 2422	Mounting Rubber, Capillary	1	853-2-4310-10300
23	623 050 5742	Mounting Plate	1	852-2-2309-34101
24	623 078 4826	Protection Rubber	3	854-2-2356-10600
25	623 078 4376	Spacer	3	854-2-2349-12201
26	623 003 6772	Heater CH5700 230V 30W	1	4-2459-56195
27	623 078 4802	Protection Rubber	2	854-2-2356-10400
28	623 078 4833	Protection Rubber	1	854-2-2356-10700
29	623 068 1125	Nut Special Ass'y	2	854-0-2321-10201
30	623 029 6558	Nut Special Ass'y	1	851-0-2395-10702
31	623 043 3588	Dehydrater Ass'y	1	852-0-4505-13600
32	623 068 9848	Condenser Ass'y (incl. No. 33)	1	854-0-4106-19300
33	623 080 3435	Mounting Plate	1	854-2-4134-32100
34	623 081 5940	Mounting Plate, Tube	2	854-2-4316-12600
35	623 081 5834	Mounting Rubber, Tube	1	854-2-4315-15600
36	623 081 5605	Mounting Rubber, Tube	1	854-2-4315-13200
37	623 081 5582	Mounting Rubber, Tube	1	854-2-4315-12400
38	623 081 5810	Mounting Rubber, Tube	1	854-2-4315-15400
39	623 071 9910	Guard	1	854-2-1113-12400
40	623 078 5182	Mounting Plate Ass'y	2	854-2-2360-189H0
41	623 108 2136	Packing	2	854-2-1351-88700
42	623 078 5281	Mounting Plate	3	854-2-2360-21111
43	623 068 2771	Cover Ass'y	1	854-0-2325-16900
44	626 040 0338	Gasket Terminal	1	801-2-5303-13100
45	626 040 0673	Cover Terminal	1	801-2-6194-12100
46	626 040 0956	Nut, Compressor	1	819-2-6919-10100
47	623 071 0733	Elec. Component Box Ass'y	1	854-0-5301-33001
48	623 002 4779	Relay CLK-16E3-21	1	4-2329-56284
49	623 002 4816	Relay MY2F-T1-USTS	1	4-2329-56288
50	623 108 2693	Mounting Plate	1	854-2-5312-65501

NOTE: Metal and plastic parts will be supplied basically with necessary heat insulation pads or packing.

Downloaded from www.Manualslib.com manuals search engine

ATTENTION !

To ensure correct parts supply, please let us know followings, when you make service parts order:

1. Part No. 2. Description 3. Q'ty 4. Volts-Hz-Ph 5. Product Model No.

Key No.	Part No.	Description	Q'ty	Reference No.
51	623 001 1878	Fixed Capacitor 440V 5MFD	1	4-2239-56224
52	623 001 2530	Fixed Capacitor 400V 35MFD	1	4-2239-56339
53	623 054 7964	Clip, Capacitor	1	852-2-5301-20600
54	626 100 0049	Thermistor TDK 101YV	1	4-2049-60102
55	623 096 4457	Transformer ATR-J122U	1	4-2519-56186
56	623 071 0962	Elec. Component Box Ass'y	1	854-0-5301-35301
57	623 107 6340	P.C.B. Ass'y POW-CL2412	1	851-0-5158-78000
58	623 108 2716	Thermistor Ass'y PBC-41E-S4 0.A	1	851-0-5259-27000
59	623 108 2723	Thermistor Ass'y PBC-41E-S4 0.C	1	851-0-5259-26500
60	623 003 3085	Terminal Base JTU30-6	1	4-2379-56175
61	623 060 3561	Label	1	852-6-4729-17300
62	623 081 4622	Mounting Rubber, Capillary	1	854-2-4310-10100
63	623 096 5218	Thermostat YTB-4U305F	1	4-2339-56274
64	623 076 7928	Mounting Plate Ass'y	1	854-2-2208-195H0
65	623 108 2143	Mounting Plate Ass'y	1	854-2-2208-19501
66	623 108 2211	Packing	1	854-2-1351-42810
67	623 107 6333	Fan Motor KFC8S-101A6P	1	525-0-0000-22306
68	623 053 2465	Cover Rubber	1	852-2-2514-10700
69	623 068 6410	Support Motor Ass'y	3	854-0-2511-14401
70	623 066 5682	Top Cover Ass'y	1	854-0-1106-20201
71	623 068 3631	Propeller Fan Ass'y (incl. No. 72)	1	854-0-2501-18100
72	623 079 9431	Set Screw, Blower M6 L16	1	854-2-2529-10101
73	623 078 3935	Cap	1	854-2-2346-11400
74	623 066 8997	Guard Ass'y	1	854-0-1113-13801
75	623 066 2612	Side Panel Ass'y (incl. No. 76, 77)	1	854-0-1102-233H0
76	623 108 2150	Side Panel Ass'y	1	854-0-1102-23301
77	623 108 2167	Packing	1	854-2-1351-42510
78	623 078 5519	Mounting Plate	1	854-2-2360-26801
79	623 108 8978	Packing	1	854-2-2366-18800
80	623 081 9788	Cover Plate	1	854-2-5304-26000
81	623 081 9795	Cover Plate	1	854-2-5304-26100
82	623 109 1299	Elec. Wiring Diagram	1	851-2-5252-03601
83	623 072 3030	Cover Plate	1	854-2-1133-20101
84	623 108 2747	Tube	1	854-2-4139-38800
85	623 066 2629	Side Panel Ass'y (incl. No. 86, 87)	1	854-0-1102-234H0
86	623 108 2174	Side Panel Ass'y	1	854-0-1102-23401
87	623 108 2167	Packing	1	854-2-1351-42510
88	623 066 1370	Front Panel Ass'y (incl. No. 89~92)	1	854-0-1101-301H0
89	623 108 2754	Front Panel Ass'y	1	854-0-1101-30101
90	623 108 2181	Packing	1	854-2-1351-42610
91	623 108 2198	Packing	2	854-2-1351-43810
92	623 045 7690	Eyelet Rubber	1	852-2-1320-10500
93	623 084 8603	Label	1	854-6-4729-78000
94	623 084 8269	Label	1	854-6-4729-71600
95	623 074 1782	Label	1	854-2-1358-46700
96	623 089 0367	Mark	1	852-2-1316-26201
97	623 096 5904	Compressor Ass'y C-R170H6S	1	852-0-4516-19700

NOTE: Metal and plastic parts will be supplied basically with necessary heat insulation pads or packing.

Downloaded from www.Manualslib.com manuals search engine

SAP243TL
INDOOR UNIT

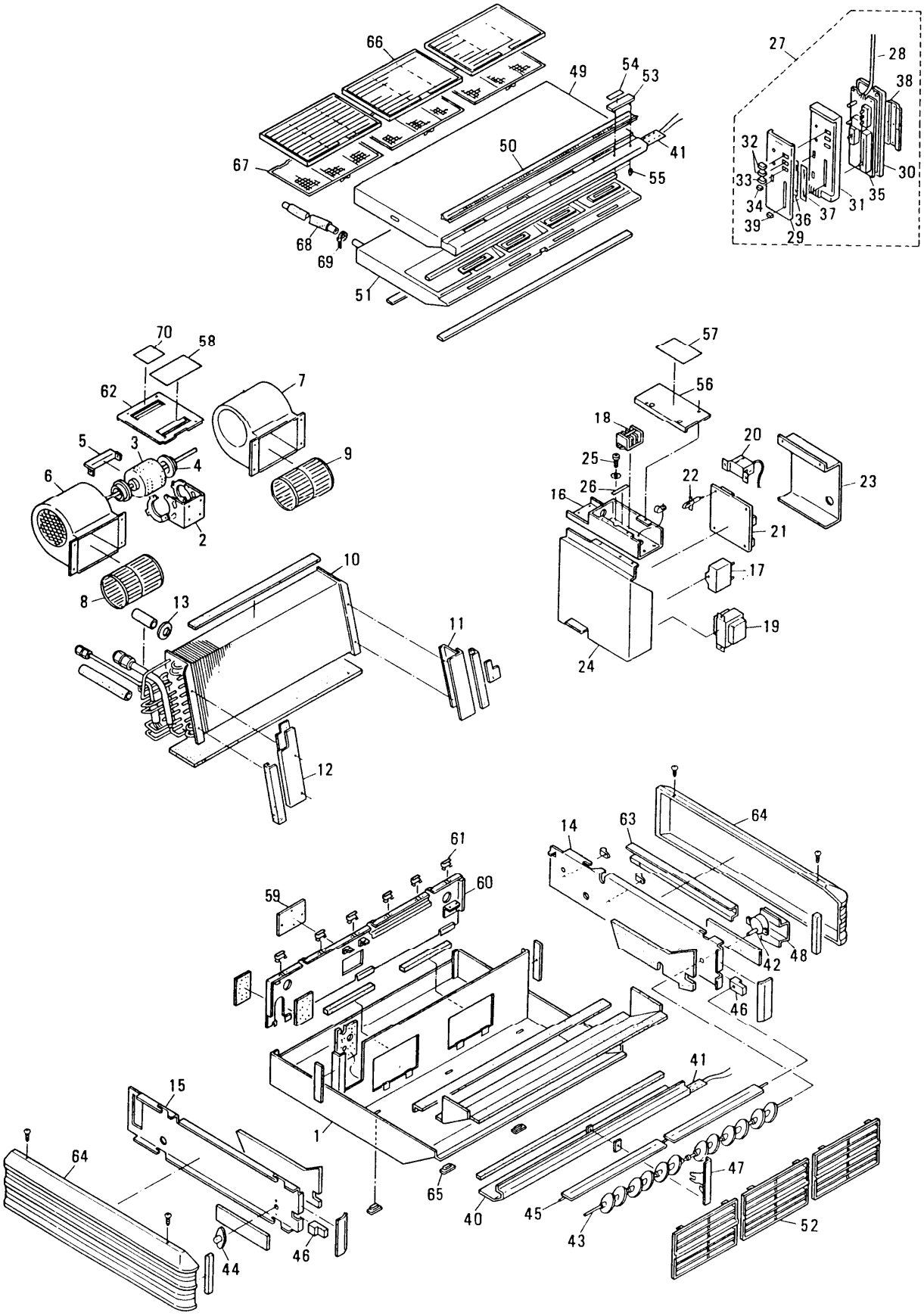

Downloaded from www.Manualslib.com manuals search engine

ATTENTION !

To ensure correct parts supply, please let us know followings, when you make service parts order:

1. Part No. 2. Description 3. Q'ty 4. Volts-Hz-Ph 5. Product Model No.

Key No.	Part No.	Description	Q'ty	Reference No.
51	623 067 6732	Drain Pan Ass'y	1	854-0-2301-342H0
52	623 071 4007	Front Panel	3	854-2-1101-45115
53	623 047 9098	Badge	1	852-2-1504-16414
54	623 090 7645	Badge	1	854-2-1354-19601
55	623 045 3845	Stopper	2	852-2-1314-11901
56	623 081 9870	Cover Plate	1	854-2-5304-26401
57	623 074 1782	Label	1	854-2-1358-46700
58	623 109 2364	Elec. Wiring Diagram	1	851-2-5251-01702
59	623 090 7676	Cover Plate	1	854-2-1133-22900
60	623 066 8003	Rear Panel Ass'y	1	854-0-1109-198H0
61	623 072 2132	Hook Plate	6	854-2-1130-12513
62	623 090 7683	Cover Plate, Fan Motor	1	854-2-2307-13201
63	623 078 2730	Cover Plate	1	854-2-2342-26601
64	623 071 4816	Side Panel Ass'y	2	854-2-1102-240H1
65	623 072 0169	Cap, Top Panel	3	854-2-1114-10820
66	623 071 5943	Suction Grille	3	854-2-1104-12613
67	623 066 9741	Air Filter Ass'y	3	854-0-1302-13800
68	623 070 2844	Drain Pipe Ass'y	1	854-0-4297-11900
69	623 038 2572	Clamper	1	851-2-5354-00200
70	623 084 8269	Label	1	854-6-4729-71600
•	623 090 7706	Installation Instructions	1	854-6-4139-50200
•	623 090 7713	Operation Manual	1	854-6-4119-47200

NOTE: Metal and plastic parts will be supplied basically with necessary heat insulation pads or packing.

Accessories

Description	Shape	Q'ty
Suspension fitting	A B	A 4 B
Suspension bolt (M8 x 200)		4
M8 hex. nut with flat washer		8
M8 bolt		4
M8 flat washer		4

Description	Shape	Q'ty
M8 spring washer		4
Woodscrew (M3.1 x 13)		2
Heat insulating material		1 1
Drain hose		1
Drain-hose clamp		1
Drain hose		1

Downloaded from www.Manualslib.com manuals search engine

ATTENTION !

To ensure correct parts supply, please let us know followings, when you make service parts order:

1. Part No. 2. Description 3. Q'ty 4. Volts-Hz-Ph 5. Product Model No.

Key No.	Part No.	Description	Q'ty	Reference No.
51	623 067 6732	Drain Pan Ass'y	1	854-0-2301-342H0
52	623 071 4007	Front Panel	3	854-2-1101-45115
53	623 047 9098	Badge	1	852-2-1504-16414
54	623 090 7645	Badge	1	854-2-1354-19601
55	623 045 3845	Stopper	2	852-2-1314-11901
56	623 081 9870	Cover Plate	1	854-2-5304-26401
57	623 074 1782	Label	1	854-2-1358-46700
58	623 109 2364	Elec. Wiring Diagram	1	851-2-5251-01702
59	623 090 7676	Cover Plate	1	854-2-1133-22900
60	623 066 8003	Rear Panel Ass'y	1	854-0-1109-198H0
61	623 072 2132	Hook Plate	6	854-2-1130-12513
62	623 090 7683	Cover Plate, Fan Motor	1	854-2-2307-13201
63	623 078 2730	Cover Plate	1	854-2-2342-26601
64	623 071 4816	Side Panel Ass'y	2	854-2-1102-240H1
65	623 072 0169	Cap, Top Panel	3	854-2-1114-10820
66	623 071 5943	Suction Grille	3	854-2-1104-12613
67	623 066 9741	Air Filter Ass'y	3	854-0-1302-13800
68	623 070 2844	Drain Pipe Ass'y	1	854-0-4297-11900
69	623 038 2572	Clamper	1	851-2-5354-00200
70	623 084 8269	Label	1	854-6-4729-71600
•	623 090 7706	Installation Instructions	1	854-6-4139-50200
•	623 090 7713	Operation Manual	1	854-6-4119-47200

NOTE: Metal and plastic parts will be supplied basically with necessary heat insulation pads or packing.

Accessories

Description	Shape	Q'ty	Parts No.
Suspension fitting	A B	4 A	854 2 1127 13703
		4 B	854 2 1127 13903
Suspension bolt (M8 × 200)		4	854 2 1356 11901
M8 hex. nut with flat washer		8	851 0 2395 10201
M8 bolt		4	3 9240 81601
M8 flat washer		4	3 9280 08011

Description	Shape	Q'ty	Parts No.
M8 spring washer		4	3 9282 08001
Woodscrew (M3.1 x 13)		2	3 9261 21301
Heat insulating material		1	854 2 2410 45500
		1	854 2 2410 32600
Drain hose		1	854 2 2334 13600
Drain-hose clamp		1	851 2 5354 00200
Drain hose		1	854 0 4297 11900

Downloaded from www.Manualslib.com manuals search engine

SAP243CL
OUTDOOR UNIT

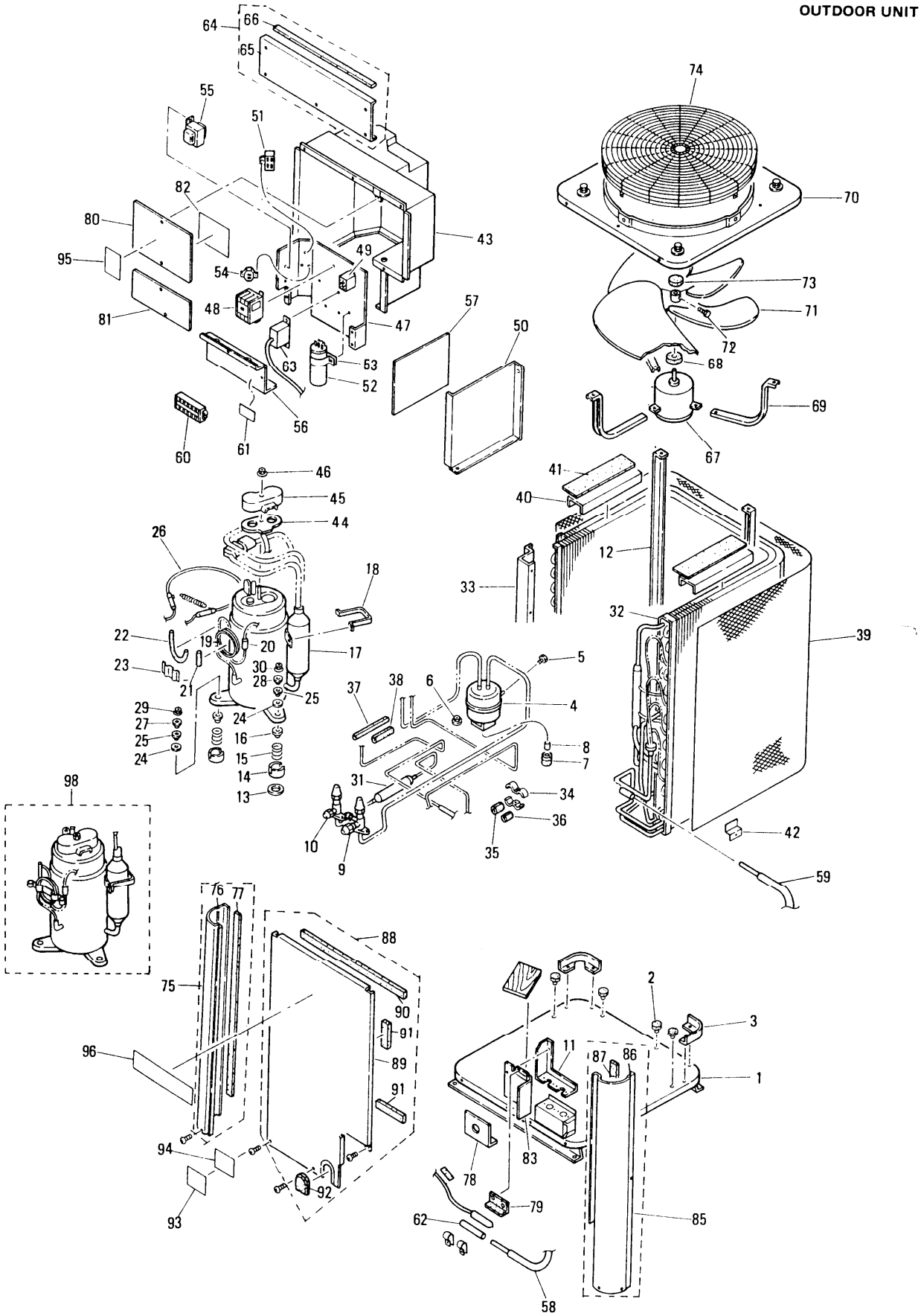

Downloaded from www.Manualslib.com manuals search engine

ATTENTION !

To ensure correct parts supply, please let us know followings, when you make service parts order:

1. Part No. 2. Description 3. Q'ty 4. Volts-Hz-Ph 5. Product Model No.

Key No.	Part No.	Description	Q'ty	Reference No.
1	623 067 4189	Bottom Plate Ass'y	1	854-0-2204-36101
2	623 073 3831	Sheet Rubber	4	854-2-1353-11000
3	623 078 5205	Mounting Plate	2	854-2-2360-19100
4	623 070 8495	Accumulator Ass'y	1	854-0-4517-19201
5	623 081 4554	Fusible Plug	1	854-2-4306-10600
6	623 029 6534	Nut Special Ass'y	1	851-0-2395-10501
7	623 077 2373	Cushion Rubber	1	854-2-2318-10600
8	624 081 8054	Sleeve	1	831-2-4307-10100
9	623 070 6156	Valve Ass'y 5/8 in.	1	854-0-4506-17900
10	623 070 9256	Valve Ass'y 1/4 in.	1	854-0-4521-12700
11	623 072 2798	Cover Plate	1	854-2-1133-17501
12	623 067 4936	Frame Ass'y	2	854-0-2206-18100
13	623 093 6423	Washer	1	3-9021-04100
14	623 035 0144	Cushion Rubber	3	851-2-2390-14000
15	623 034 5836	Spring	3	851-2-2330-13201
16	623 078 4819	Protection Rubber	3	854-2-2356-10500
17	623 070 8488	Accumulator Ass'y	1	854-0-4517-19100
18	623 034 9452	Band Mounting	1	851-2-2356-16901
19	623 080 9871	Capillary Tube	1	854-2-4219-58100
20	623 043 4059	Strainer Ass'y	1	852-0-4506-14000
21	623 051 0128	Packing	1	852-2-2353-19500
22	623 065 2422	Mounting Rubber, Capillary	1	853-2-4310-10300
23	623 050 5742	Mounting Plate	1	852-2-2309-34101
24	623 078 4826	Protection Rubber	3	854-2-2356-10600
25	623 078 4376	Spacer	3	854-2-2349-12201
26	623 003 6772	Heater CH5700 230V 30W	1	4-2459-56195
27	623 078 4802	Protection Rubber	2	854-2-2356-10400
28	623 078 4833	Protection Rubber	1	854-2-2356-10700
29	623 068 1125	Nut Special Ass'y	2	854-0-2321-10201
30	623 029 6558	Nut Special Ass'y	1	851-0-2395-10702
31	623 043 3588	Dehydrater Ass'y	1	852-0-4505-13600
32	623 068 9848	Condenser Ass'y (incl. No. 33)	1	854-0-4106-19300
33	623 080 3435	Mounting Plate	1	854-2-4134-32100
34	623 081 5940	Mounting Plate, Tube	2	854-2-4316-12600
35	623 081 5834	Mounting Rubber, Tube	1	854-2-4315-15600
36	623 081 5605	Mounting Rubber, Tube	1	854-2-4315-13200
37	623 081 5582	Mounting Rubber, Tube	1	854-2-4315-12400
38	623 081 5810	Mounting Rubber, Tube	1	854-2-4315-15400
39	623 071 9910	Guard	1	854-2-1113-12400
40	623 078 5182	Mounting Plate Ass'y	2	854-2-2360-18910
41	623 108 2136	Packing	2	854-2-1351-88700
42	623 078 5281	Mounting Plate	3	854-2-2360-21111
43	623 068 2771	Cover Ass'y	1	854-0-2325-16900
44	626 040 0338	Gasket Terminal	1	801-2-5303-13100
45	626 040 0673	Cover Terminal	1	801-2-6194-12100
46	626 040 0956	Nut, Compressor	1	819-2-6919-10100
47	623 071 0733	Elec. Component Box Ass'y	1	854-0-5301-33001
48	623 002 4779	Relay CLK-16E3-21	1	4-2329-56284
49	623 002 4816	Relay MY2F-T1-USTS	1	4-2329-56288
50	623 108 2693	Mounting Plate	1	854-2-5312-65501

NOTE: Metal and plastic parts will be supplied basically with necessary heat insulation pads or packing.

Downloaded from www.Manualslib.com manuals search engine

ATTENTION !

To ensure correct parts supply, please let us know followings, when you make service parts order:

1. Part No. 2. Description 3. Q'ty 4. Volts-Hz-Ph 5. Product Model No.

Key No.	Part No.	Description	Q'ty	Reference No.
51	623 001 1878	Fixed Capacitor 440V 5MFD	1	4-2239-56224
52	623 001 2530	Fixed Capacitor 400V 35MFD	1	4-2239-56339
53	623 054 7964	Clip, Capacitor	1	852-2-5301-20600
54	626 100 0049	Thermistor TDK 101YV	1	4-2049-60102
55	623 096 4457	Transformer ATR-J122U	1	4-2519-56186
56	623 071 0962	Elec. Component Box Ass'y	1	854-0-5301-35301
57	623 107 6340	P.C.B. Ass'y POW-CL2412	1	851-0-5158-78000
58	623 108 2716	Thermistor Ass'y PBC-41E-S4	1	851-0-5259-27000
59	623 108 2723	Thermistor Ass'y PBC-41E-S4	1	851-0-5259-26500
60	623 003 3085	Terminal Base JTU30-6	1	4-2379-56175
61	623 060 3561	Label	1	852-6-4729-17300
62	623 081 4622	Mounting Rubber, Capillary	1	854-2-4310-10100
63	623 096 5218	Thermostat YTB-4U305F	1	4-2339-56274
64	623 076 7928	Mounting Plate Ass'y	1	854-2-2208-195H0
65	623 108 2143	Mounting Plate Ass'y	1	854-2-2208-19501
66	623 108 2211	Packing	1	854-2-1351-42810
67	623 107 6333	Fan Motor KFC8S-101A6P	1	525-0-0000-22306
68	623 053 2465	Cover Rubber	1	852-2-2514-10700
69	623 068 6410	Support Motor Ass'y	3	854-0-2511-14401
70	623 066 5682	Top Cover Ass'y	1	854-0-1106-20201
71	623 068 3631	Propeller Fan Ass'y (incl.No.72)	1	854-0-2501-18100
72	623 079 9431	Set Screw, Blower M6 L16	1	854-2-2529-10101
73	623 078 3935	Cap	1	854-2-2346-11400
74	623 066 8997	Guard Ass'y	1	854-0-1113-13801
75	623 066 2612	Side Panel Ass'y (incl.No.76,77)	1	854-0-1102-233H0
76	623 108 2150	Side Panel Ass'y	1	854-0-1102-23301
77	623 108 2167	Packing	1	854-2-1351-42510
78	623 078 5519	Mounting Plate	1	854-2-2360-26801
79	623 108 8978	Packing	1	854-2-2366-18800
80	623 081 9788	Cover Plate	1	854-2-5304-26000
81	623 081 9795	Cover Plate	1	854-2-5304-26100
82	623 109 1282	Elec. Wiring Diagram	1	851-2-5252-03602
83	623 072 3030	Cover Plate	1	854-2-1133-20101
84	623 108 2747	Tube	1	854-2-4139-38800
85	623 066 2629	Side Panel Ass'y (incl.No.86,87)	1	854-0-1102-234H0
86	623 108 2174	Side Panel Ass'y	1	854-0-1102-23401
87	623 108 2167	Packing	1	854-2-1351-42510
88	623 066 1370	Front Panel Ass'y (incl.No.89~92)	1	854-0-1101-301H0
89	623 108 2754	Front Panel Ass'y	1	854-0-1101-30101
90	623 108 2181	Packing	1	854-2-1351-42610
91	623 108 2198	Packing	2	854-2-1351-43810
92	623 045 7690	Eyelet Rubber	1	852-2-1320-10500
93	623 084 8603	Label	1	854-6-4729-78000
94	623 084 8269	Label	1	854-6-4729-71600
95	623 074 1782	Label	1	854-2-1358-46700
96	623 089 0367	Mark	1	852-2-1316-26201
97	623 043 7616	Compressor Ass'y C-R170H6S	1	852-0-4516-17700

NOTE: Metal and plastic parts will be supplied basically with necessary heat insulation pads or packing.

Downloaded from www.Manualslib.com manuals search engine

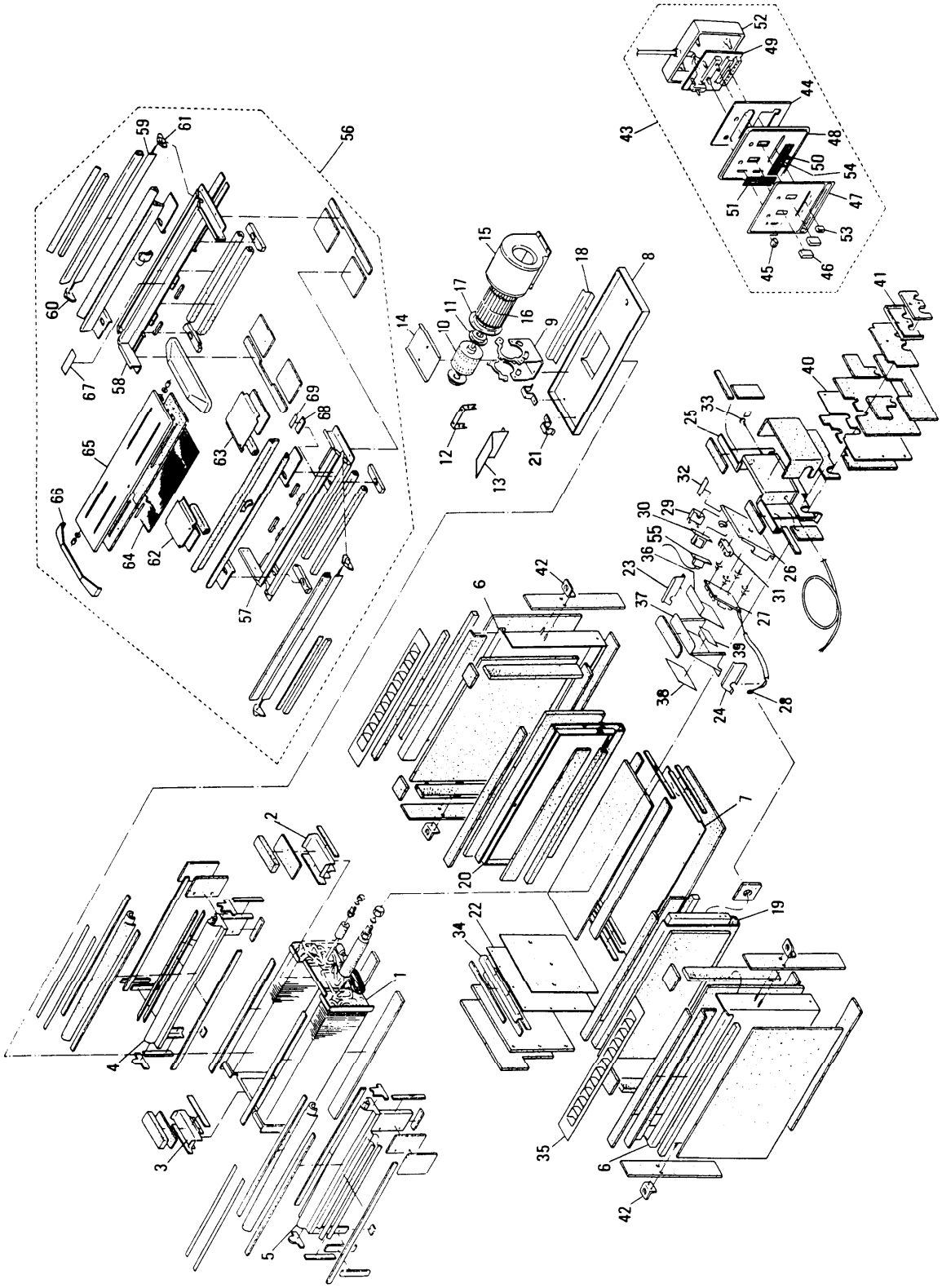

Downloaded from www.Manualslib.com manuals search engine

ATTENTION !

To ensure correct parts supply, please let us know followings, when you make service parts order:

1. Part No. 2. Description 3. Q'ty 4. Volts-Hz-Ph 5. Product Model No.

Key No.	Part No.	Description	Q'ty	Reference No.
1	623 097 5330	Evaporator Ass'y	1	854-0-4118-58500
2	623 067 6329	Drain Pan Ass'y	1	854-0-2301-300H0
3	623 067 6343	Drain Pan Ass'y	1	854-0-2301-301H0
4	623 067 6381	Drain Pan Ass'y	1	854-0-2301-302H2
5	623 067 6428	Drain Pan Ass'y	1	854-0-2301-303H2
6	623 066 2322	Side Panel Ass'y	2	854-0-1102-196H2
7	623 066 4258	Top Plate Ass'y	1	854-0-1105-191H3
8	623 068 7226	Partition Plate Ass'y	1	854-0-2516-12401
9	623 068 6526	Support Motor Ass'y	1	854-0-2511-15401
10	623 107 5220	Fan Motor KFC4S-81B6P	1	525-094-06
11	623 079 9950	Cushion Rubber	2	854-2-2534-13510
12	623 079 7864	Mounting Plate	1	854-2-2518-28700
13	623 077 1116	Cover Plate, Fan Motor	1	854-2-2307-12401
14	623 077 1055	Cover Plate, Fan Motor	1	854-2-2307-11901
15	623 068 4386	Fan Casing Ass'y	1	854-0-2502-17801
16	623 068 3365	Centrifugal Fan Ass'y	1	854-0-2501-14800
17	623 079 8038	Air Guide	1	854-2-2519-11400
18	623 078 6035	Mounting Plate	1	854-2-2360-41501
19	623 077 2007	Partition Plate	1	854-2-2314-184H2
20	623 077 1970	Partition Plate	1	854-2-2314-183H2
21	623 078 4673	Guide	2	854-2-2352-12300
22	623 071 5110	Side Panel	1	854-2-1102-275H2
23	623 081 8453	Elec. Component Box	1	854-2-5301-49401
24	623 081 8460	Elec. Component Box	1	854-2-5301-49501
25	623 071 0795	Elec. Component Box Ass'y	1	854-0-5301-335H1
26	623 071 0818	Elec. Component Box Ass'y	1	854-0-5301-33701
27	623 030 4857	P.C.B. Ass'y POW-36R	1	851-0-5158-18500
28	623 000 7666	Thermistor OCS5K-UL	1	4-2049-56184
29	623 001 1830	Fixed Capacitor 440V 3MF	1	4-2239-56220
30	623 096 4457	Transformer ATR-J122U	1	4-2519-56186
31	623 003 3030	Terminal Base JTU20-3	1	4-2379-56168
32	623 060 3561	Label	1	852-6-4729-17300
33	623 051 6977	Screw Special	1	852-2-2396-10103
34	623 067 0280	Mounting Plate Ass'y	1	854-0-1306-177H2
35	623 071 9071	Blade Louver	2	854-2-1110-14001
36	623 081 9900	Cover Plate	1	854-2-5304-26601
37	623 081 9887	Cover Plate	1	854-2-5304-265H1
38	623 074 1782	Label	1	854-2-1358-46700
39	623 097 4975	Elec. Wiring Diagram	1	851-2-5251-01901
40	623 071 3932	Front Panel	1	854-2-1101-450H2
41	623 072 2880	Cover Plate	1	854-2-1133-181H3
42	623 072 2095	Hook Plate	4	854-2-1130-12200
43	623 028 8737	Remote Control Switch RCS-36R	1	851-0-0051-17600
44	623 071 1518	Mounting Plate Ass'y	1	854-0-5302-14201
45	623 072 6956	Knob	1	854-2-1311-12002
46	623 072 6826	Knob	2	854-2-1311-10904
47	623 074 2796	Indicator Plate	1	854-2-1359-21702
48	623 082 0005	Cover Plate	1	854-2-5304-28100
49	623 030 5144	P.C.B. Ass'y	1	851-0-5158-23900
50	623 027 7700	Filter	1	800-2-5367-11300

NOTE: Metal and plastic parts will be supplied basically with necessary heat insulation pads or packing.

Downloaded from www.Manualslib.com manuals search engine

ATTENTION !

To ensure correct parts supply, please let us know followings, when you make service parts order:

1. Part No. 2. Description 3. Q'ty 4. Volts-Hz-Ph 5. Product Model No.

Key No.	Part No.	Description	Q'ty	Reference No.
51	623 027 7724	Filter	1	800-2-5367-11600
52	623 081 8354	Elec. Component Box	1	854-2-5301-44711
53	623 072 7007	Knob	1	854-2-1311-12401
54	623 037 9589	Label	1	851-2-5261-26600
55	623 002 9477	Thermostat RTB-4U301	1	4-2339-56224
56	623 087 6842	Panel Ass'y SAP-241RW	1	859-341-23
57	623 066 4722	Top Plate Ass'y	1	854-0-1105-230H3
58	623 066 4463	Top Plate Ass'y	1	854-0-1105-216H4
59	623 067 1386	Blade Louver Ass'y	2	854-0-1505-178H2
60	623 076 6389	Fastener Blade	2	854-2-1521-11300
61	623 076 6396	Fastener Blade	2	854-2-1521-11400
62	623 072 2972	Cover Plate	1	854-2-1133-193H2
63	623 072 3009	Cover Plate	1	854-2-1133-194H2
64	623 067 9337	Case Ass'y, Filter	1	854-0-2308-23700
65	623 066 4678	Top Plate Ass'y	1	854-0-1105-224H2
66	623 072 0138	Cap, Top Panel	2	854-2-1114-10713
67	623 084 8269	Label	1	854-6-4729-71600
68	623 047 9098	Badge	1	852-2-1504-16414
69	623 090 7645	Badge	1	854-2-1354-19601
•	623 097 5057	Operation Manual	1	854-6-4119-52400
•	623 097 4982	Installation Instructions	1	854-6-4139-59200

NOTE: Metal and plastic parts will be supplied basically with necessary heat insulation pads or packing.

■ Accessory Parts

LIST OF PACKAGED PARTS

No.	Description	Shape	Q'ty	No.	Description	Shape	Q'ty
1	PVC elbow		1	7	Drain hose adapator		1
2	PVC T-fitting		1	8	Flanged hex nut		4
3	PVC pipe		4	9	Special washer		4
4	PVC socket		2	10	Remote control unit		1
5	Pan head screw	M5	4	11	Read wire for remote control unit		1
6	Countersunk head wood screw		2				

Key No.	Part No.	Description	Q'ty	Reference No.
1	623 077 4353	PVC elbow	1	854-2-2334-12300
2	623 077 4346	PVC T-Fitting	1	854-2-2334-12200
3	623 077 4360	PVC pipe	4	854-2-2334-12400
4	623 077 4339	PVC socket	2	854-2-2334-12100
5	623 094 7122	Pan-Head Screw	4	3-9231-54003
6	623 093 5365	Countersunk-head wood Screw	2	3-9261-21301
7	623 077 4391	Drain hose adaptor	1	854-2-2334-13600
8	623 067 0402	Flange hex nut	4	854-0-1355-10201
9	623 073 5149	Screw washer	1	854-2-1355-13101
10	623 028 8737	Remote control unit	1	851-0-0051-17600
11	623 031 1497	Read wire for remoto control unit	1	851-0-5292-14600

Downloaded from www.Manualslib.com manuals search engine

SAP243CL
OUTDOOR UNIT

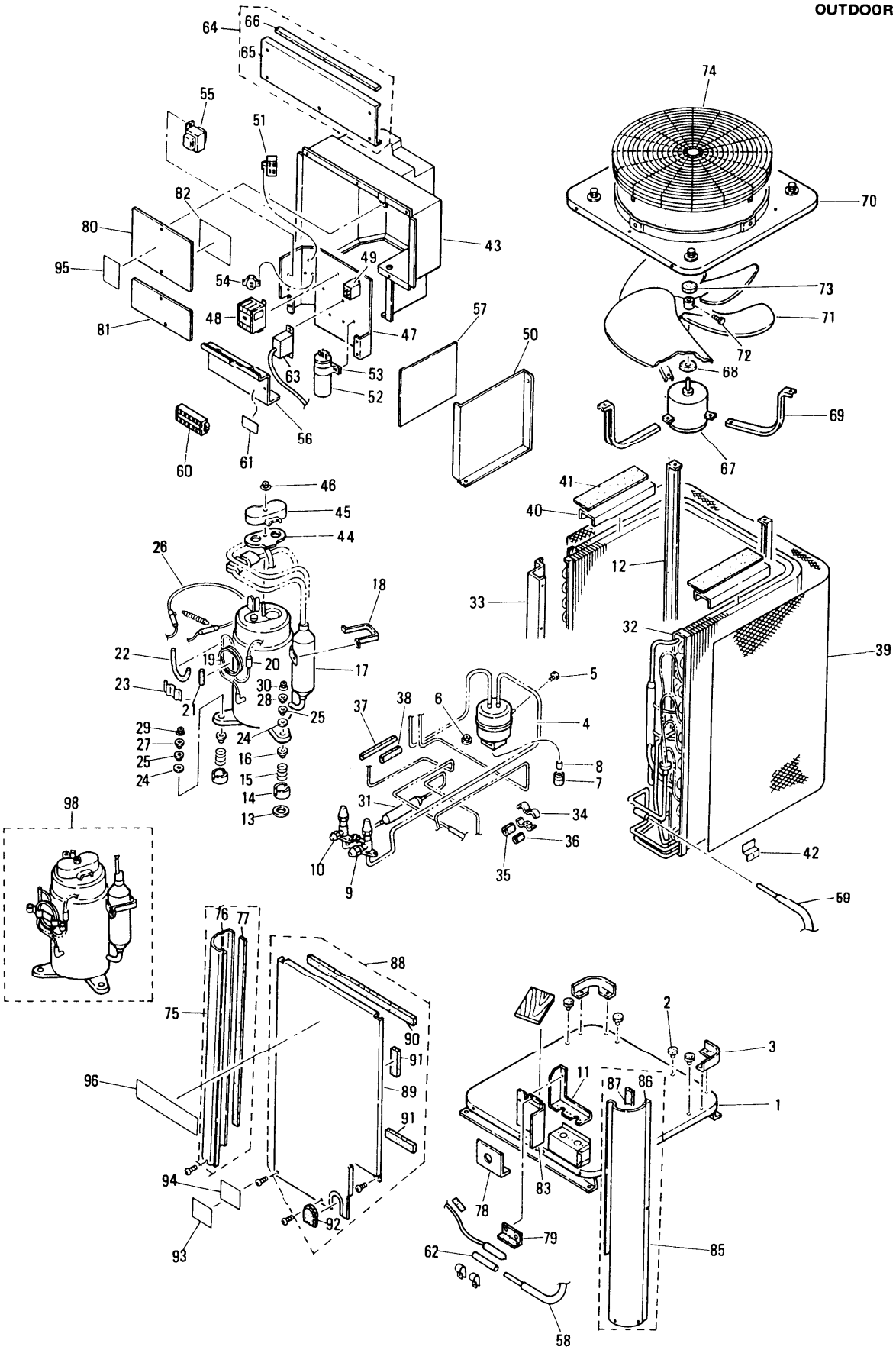

Downloaded from www.Manualslib.com manuals search engine

ATTENTION !

To ensure correct parts supply, please let us know followings, when you make service parts order:

1. Part No. 2. Description 3. Q'ty 4. Volts-Hz-Ph 5. Product Model No.

Key No.	Part No.	Description	Q'ty	Reference No.
1	623 067 4189	Bottom Plate Ass'y	1	854-0-2204-36101
2	623 073 3831	Sheet Rubber	4	854-2-1353-11000
3	623 078 5205	Mounting Plate	2	854-2-2360-19100
4	623 070 8495	Accumulator Ass'y	1	854-0-4517-19201
5	623 081 4554	Fusible Plug	1	854-2-4306-10600
6	623 029 6534	Nut Special Ass'y	1	851-0-2395-10501
7	623 077 2373	Cushion Rubber	1	854-2-2318-10600
8	624 081 8054	Sleeve	1	831-2-4307-10100
9	623 070 6156	Valve Ass'y 5/8 in.	1	854-0-4506-17900
10	623 070 9256	Valve Ass'y 1/4 in.	1	854-0-4521-12700
11	623 072 2798	Cover Plate	1	854-2-1133-17501
12	623 067 4936	Frame Ass'y	2	854-0-2206-18100
13	623 093 6423	Washer	1	3-9021-04100
14	623 035 0144	Cushion Rubber	3	851-2-2390-14000
15	623 034 5836	Spring	3	851-2-2330-13201
16	623 078 4819	Protection Rubber	3	854-2-2356-10500
17	623 070 8488	Accumulator Ass'y	1	854-0-4517-19100
18	623 034 9452	Band Mounting	1	851-2-2356-16901
19	623 080 9871	Capillary Tube	1	854-2-4219-58100
20	623 043 4059	Strainer Ass'y	1	852-0-4506-14000
21	623 051 0128	Packing	1	852-2-2353-19500
22	623 065 2422	Mounting Rubber, Capillary	1	853-2-4310-10300
23	623 050 5712	Mounting Plate	1	852-2-2309-34101
24	623 078 4826	Protection Rubber	3	854-2-2356-10600
25	623 078 4376	Spacer	3	854-2-2349-12201
26	623 003 6772	Heater CH5700 230V 30W	1	4-2459-56195
27	623 078 4802	Protection Rubber	2	854-2-2356-10400
28	623 078 4833	Protection Rubber	1	854-2-2356-10700
29	623 068 1125	Nut Special Ass'y	2	854-0-2321-10201
30	623 029 6558	Nut Special Ass'y	1	851-0-2395-10702
31	623 043 3588	Dehydrater Ass'y	1	852-0-4505-13600
32	623 068 9848	Condenser Ass'y (incl. No. 33)	1	854-0-4106-19300
33	623 080 3435	Mounting Plate	1	854-2-4134-32100
34	623 081 5940	Mounting Plate, Tube	2	854-2-4316-12600
35	623 081 5834	Mounting Rubber, Tube	1	854-2-4315-15600
36	623 081 5605	Mounting Rubber, Tube	1	854-2-4315-13200
37	623 081 5582	Mounting Rubber, Tube	1	854-2-4315-12400
38	623 081 5810	Mounting Rubber, Tube	1	854-2-4315-15400
39	623 071 9910	Guard	1	854-2-1113-12400
40	623 078 5182	Mounting Plate Ass'y	2	854-2-2360-18900
41	623 108 2136	Packing	2	854-2-1351-88700
42	623 078 5281	Mounting Plate	3	854-2-2360-21111
43	623 068 2771	Cover Ass'y	1	854-0-2325-16900
44	626 040 0338	Gasket Terminal	1	801-2-5303-13100
45	626 040 0673	Cover Terminal	1	801-2-6194-12100
46	626 040 0956	Nut, Compressor	1	819-2-6919-10100
47	623 071 0733	Elec. Component Box Ass'y	1	854-0-5301-33001
48	623 002 4779	Relay CLK-16E3-21	1	4-2329-56284
49	623 002 4816	Relay MY2F-T1-USTS	1	4-2329-56288
50	623 108 2693	Mounting Plate	1	854-2-5312-65501

NOTE: Metal and plastic parts will be supplied basically with necessary heat insulation pads or packing.

Downloaded from www.Manualslib.com manuals search engine

ATTENTION !

To ensure correct parts supply, please let us know followings, when you make service parts order:

1. Part No. 2. Description 3. Q'ty 4. Volts-Hz-Ph 5. Product Model No.

Key No.	Part No.	Description	Q'ty	Reference No.
51	623 001 1878	Fixed Capacitor 440V 5MFD	1	4-2239-56224
52	623 001 2530	Fixed Capacitor 400V 35MFD	1	4-2239-56339
53	623 054 7964	Clip, Capacitor	1	852-2-5301-20600
54	626 100 0049	Thermistor TDK 101YV	1	4-2049-60102
55	623 096 4457	Transformer ATR-J122U	1	4-2519-56186
56	623 071 0962	Elec. Component Box Ass'y	1	854-0-5301-35301
57	623 107 6340	P.C.B. Ass'y POW-CL2412	1	851-0-5158-78000
58	623 108 2716	Thermistor Ass'y PBC-41E-S4	1	851-0-5259-27000
59	623 108 2723	Thermistor Ass'y PBC-41E-S4	1	851-0-5259-26500
60	623 003 3085	Terminal Base JTU30-6	1	4-2379-56175
61	623 060 3561	Label	1	852-6-4729-17300
62	623 081 4622	Mounting Rubber, Capillary	1	854-2-4310-10100
63	623 096 5218	Thermostat YTB-4U305F	1	4-2339-56274
64	623 076 7928	Mounting Plate Ass'y	1	854-2-2208-195H0
65	623 108 2143	Mounting Plate Ass'y	1	854-2-2208-19501
66	623 108 2211	Packing	1	854-2-1351-42810
67	623 107 6333	Fan Motor KFC8S-101A6P	1	525-0-0000-22306
68	623 053 2465	Cover Rubber	1	852-2-2514-10700
69	623 068 6410	Support Motor Ass'y	3	854-0-2511-14401
70	623 066 5682	Top Cover Ass'y	1	854-0-1106-20201
71	623 068 3631	Propeller Fan Ass'y (incl. No. 72)	1	854-0-2501-18100
72	623 079 9431	Set Screw, Blower M6 L16	1	854-2-2529-10101
73	623 078 3935	Cap	1	854-2-2346-11400
74	623 066 8997	Guard Ass'y	1	854-0-1113-13801
75	623 066 2612	Side Panel Ass'y (incl. No. 76, 77)	1	854-0-1102-233H0
76	623 108 2150	Side Panel Ass'y	1	854-0-1102-23301
77	623 108 2167	Packing	1	854-2-1351-42510
78	623 078 5519	Mounting Plate	1	854-2-2360-26801
79	623 108 8978	Packing	1	854-2-2366-18800
80	623 081 9788	Cover Plate	1	854-2-5304-26000
81	623 081 9795	Cover Plate	1	854-2-5304-26100
82	623 109 1282	Elec. Wiring Diagram	1	851-2-5252-03602
83	623 072 3030	Cover Plate	1	854-2-1133-20101
84	623 108 2747	Tube	1	854-2-4139-38800
85	623 066 2629	Side Panel Ass'y (incl. No. 86, 87)	1	854-0-1102-234H0
86	623 108 2174	Side Panel Ass'y	1	854-0-1102-23401
87	623 108 2167	Packing	1	854-2-1351-42510
88	623 066 1370	Front Panel Ass'y (incl. No. 89~92)	1	854-0-1101-301H0
89	623 108 2754	Front Panel Ass'y	1	854-0-1101-30101
90	623 108 2181	Packing	1	854-2-1351-42610
91	623 108 2198	Packing	2	854-2-1351-43810
92	623 045 7690	Eyelet Rubber	1	852-2-1320-10500
93	623 084 8603	Label	1	854-6-4729-78000
94	623 084 8269	Label	1	854-6-4729-71600
95	623 074 1782	Label	1	854-2-1358-46700
96	623 089 0367	Mark	1	852-2-1316-26201
97	623 043 7616	Compressor Ass'y C-R170H6S	1	852-0-4516-17700

NOTE: Metal and plastic parts will be supplied basically with necessary heat insulation pads or packing.

Downloaded from www.Manualslib.com manuals search engine

For parts or service contact

SFS CORPORATION

SFS Corporation: 1200 West Artesia Blvd., Compton, California 90220

1990/Apr./TA/1000 Printed in Japan

Downloaded from www.Manualslib.com manuals search engine