SERVICE MANUAL

12FH11X
12FH12X
18FH12X

SANYO

SPLIT SYSTEM AIR CONDITIONER

Jul. 1989

Outdoor Unit

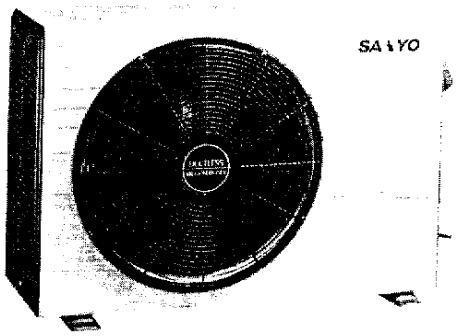

CH1211
CH1212

Indoor Unit

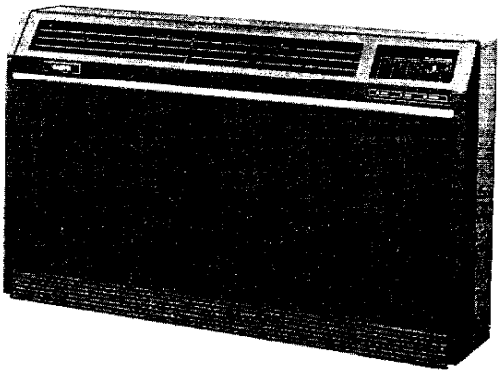

FH1211X
FH1212X
FH1812X

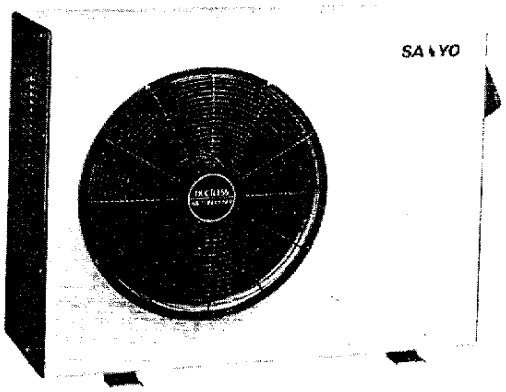

CH1812

8526481010900

REFERENCE NO. WM-700233

Downloaded from www.Manualslib.com manuals search engine

Table of Contents

Page

1. SPECIFICATIONS 1
  1) Unit Specifications 1
    12FH11X 1
    12FH12X 2
    18FH12X 3
  2) Major Component Specifications 4
    FH1211X/CH1211 4
    FH1212X/CH1212 5
    FH1812X/CH1812 6
  3) Other Component Specifications 7
2. OPERATING RANGE 10
3. CONSTRUCTION OF THE UNIT 11
4. DIMENSIONAL DATA 13
    FH1211X/FH1212X/FH1812X 13
    CH1211/CH1212/CH1812 14
5. CAPACITY 15
  1) COOLING CAPACITY 15
    12FH11X (115V) 15
    12FH12X (230V) 16
    12FH12X (208V) 17
    18FH12X (230V) 18
    18FH12X (208V) 19
  2) HEATING CAPACITY 20
    12FH11X (115V) 20
    12FH12X (230V) 21
    12FH12X (208V) 22
    18FH12X (230V) 23
    18FH12X (208V) 24
6. OPERATING INSTRUCTIONS 25
    Controls and Indicators 25
    Operating Thumbnails 26
    Operation 27
      1) "Carefree" Operation 27
      2) Cooling 27
        A. Manual Cooling 27
        B. Night Setback Mode in Cooling 28
      3) Adjusting the Fan Speed 29
        A. Automatic 29
        B. Manual 29
      4) Fan Only 29
      5) Using the Timer 30
        A. TIMER OFF Mode 30
        B. TIMER ON Mode 30

Downloaded from www.Manualslib.com manuals search engine

6) Heating 31
A. Manual Heating 31
B. Night Setback Mode in Heating 32
7) Adjusting the Air Flow Direction 32
A. Horizontal 32
B. Vertical 32
Care and Cleaning 33
7. FUNCTION 34
1) Temperature Control 34
2) Night Setback Modes Timing Chart 36
3) Auto Modes 37
4) Freeze Prevention (Cooling) 39
5) Outdoor Fan Speed Control (only 18FH12X) 39
6) Overload Prevention (Heating) 40
7) Cold Draft Prevention (Heating) 41
8) Defrosting Mode (Heating) 42
8. INSTALLATION INSTRUCTIONS 44
1) Installation Site Selection 44
2) Connecting Pipes between Indoor and Outdoor Unit 46
3) Insulation of Refrigerant Piping 46
4) Wiring Instructions 46
5) Air Purging 47
6) Test Run 48
9. REFRIGERANT FLOW DIAGRAM 49
10. ELECTRICAL DATA 51
●Schematic Diagram 51
12FH11X 51
12FH12X 52
18FH12X 53
●Electrical Wiring Diagram 54
12FH11X 54
12FH12X 55
18FH12X 56
●Electrical Characteristics 57
●P.C.B. Ass'y (Printed Pattern) 58
11. TROUBLESHOOTING 60
12. CHECKING AND REPLACING ELECTRICAL COMPONENTS 74
13. DISASSEMBLY PROCEDURES 83
14. PARTS LIST 91

Downloaded from www.Manualslib.com manuals search engine

1. SPECIFICATIONS

1) Unit Specifications

Model No.			12FH11X	
Unit Model No.		Indoor unit	FH1211X	
		Outdoor unit	CH1211	
PERFORMANCE			Cooling	Heating
Capacity		BTU/hr.	11,400	12,500
Air circulation (High)		cu.ft./min.	350	
Moisture removal (High)		Pints/hr.	3.3	
ELECTRICAL RATING				
Frequency		Hz	60	
Phase			Single	
Voltage rating		V	115	
Available voltage range		V	103 ~ 126	
Running amperes		A	11.0	11.1
Power input		W	1,210	1,240
Power factor		%	96	97
S.E.E.R.		BTU/Whr.	10.0	2.95 (COP)
Heat element		kW - HSPF	-	——— - 6.8 (HSPF)
FEATURES				
Controls			Microcomputer	
Control switch			Indoor unit	
Temperature control			IC Thermostat	
Timer			ON/OFF , 12-hours	
Fan speeds	Indoor fan / Outdoor fan		3 / 1	
Air deflection	Horizontal / Vertical		Manual / Manual	
Air filter			Washable	
Compressor			Rotary	
Refrigerant (R-22) amount		lbs.(g)	3.0(1,360) + 0.088(40)(for quick air purge)	
Refrigerant control			Capillary tube	
Operation sound	In-Hi/Me/Lo	dB-A	37 / 34 / 31	
	Out-Hi	dB-A	49	
Refrigerant piping connections			Flare type	
Max allowable piping length at shipment		ft.(m)	33 (10)	
Max. elevation difference between two units		ft.(m)	23 (7)	
Refrigerant pipe diameter o.d.	Narrow pipe	in.(mm)	1/4 (6.35)	
	Wide pipe	in.(mm)	1/2 (12.7)	
Refrigerant piping kit			Optional	
Accessories			-	
DIMENSIONS & WEIGHT			Indoor unit	Outdoor unit
Height		in.(mm)	26-25/32 (680)	20- 7/8 (530)
Width		in.(mm)	43- 5/16 (1,100)	29-17/32 (750)
Depth		in.(mm)	8-15/32 (215)	11- 1/32 (280)
Net weight		lbs.(kg)	68 (30.8)	92 (41.7)
Shipping volume		cu.ft.(cu.m)	11.7 (0.331)	6.7 (0.190)
Shipping weight (Approx.)		lbs.(kg)	95 (43.1)	99 (44.9)

DATA SUBJECT TO CHANGE WITHOUT NOTICE.

Remarks: Rated conditions : Cooling, Outdoor unit entering air temperature 95°F D.B./75°F W.B.
Indoor unit entering air temperature 80°F D.B./67°F W.B.
Heating, Outdoor unit entering air temperature 47°F D.B./43°F W.B.
Indoor unit entering air temperature 70°F D.B.

Downloaded from www.Manualslib.com manuals search engine

Unit Specifications

Model No.			12FH12X	
Unit Model No.		Indoor unit	FH1212X	
		Outdoor unit	CH1212	
PERFORMANCE			Cooling	Heating
Capacity		BTU/hr.	11,400 / 11,200	12,500 / 12,200
Air circulation (High)		cu.ft./min.	350 / 340	
Moisture removal (High)		Pints/hr.	3.3 / 3.2	
ELECTRICAL RATING				
Frequency		Hz	60	
Phase			Single	
Voltage rating		V	230 / 208	
Available voltage range		V	187 ~ 253	
Running amperes		A	5.6 / 5.9	5.2 / 5.5
Power input		W	1,210 / 1,180	1,190 / 1,140
Power factor		%	94 / 96	99 / 99
S.E.E.R.		BTU/Whr.	10.0 / 10.0	3.05 / 3.15 (COP)
Heat element		kW - HSPF	-	3.0 / 2.45 - 6.8 / 6.8
FEATURES				
Controls			Microcomputer	
Control switch			Indoor unit	
Temperature control			IC Thermostat	
Timer			ON/OFF , 12-hours	
Fan speeds	Indoor fan / Outdoor fan		3 / 1	
Air deflection	Horizontal / Vertical		Manual / Manual	
Air filter			Washable	
Compressor			Rotary	
Refrigerant (R-22) amount		lbs.(g)	2.96(1,340) + 0.088(40)(for quick air purge)	
Refrigerant control			Capillary tube	
Operation sound	In-Hi/Me/Lo	dB-A	37 / 34 / 31	
	Out-Hi	dB-A	49	
Refrigerant piping connections			Flare type	
Max allowable piping length at shipment		ft.(m)	33 (10)	
Max. elevation difference between two units		ft.(m)	23 (7)	
Refrigerant pipe diameter o.d.	Narrow pipe	in.(mm)	1/4 (6.35)	
	Wide pipe	in.(mm)	1/2 (12.7)	
Refrigerant piping kit			Optional	
Accessories			-	
DIMENSIONS & WEIGHT			Indoor unit	Outdoor unit
Height		in.(mm)	26-25/32 (680)	20- 7/8 (530)
Width		in.(mm)	43- 5/16 (1,100)	29-17/32 (750)
Depth		in.(mm)	8-15/32 (215)	11- 1/32 (280)
Net weight		lbs.(kg)	69 (31.3)	92 (41.7)
Shipping volume		cu.ft.(cu.m)	11.7 (5.31)	6.7 (0.190)
Shipping weight (Approx.)		lbs.(kg)	96 (43.5)	99 (44.9)

DATA SUBJECT TO CHANGE WITHOUT NOTICE.

Remarks: Rated conditions ; Cooling, Outdoor unit entering air temperature 95°F D.B./75°F W.B.
Indoor unit entering air temperature 80°F D.B./67°F W.B.
Heating, Outdoor unit entering air temperature 47°F D.B./43°F W.B.
Indoor unit entering air temperature 70°F D.B.

Downloaded from www.Manualslib.com manuals search engine

Unit Specifications

Model No.		18FH12X	
Unit Model No.	Indoor unit	FH1812X	
	Outdoor unit	CH1812	
PERFORMANCE		Cooling	Heating
Capacity	BTU/hr.	17,000 / 16,500	19,000 / 18,600
Air circulation (High)	cu.ft./min.	550 / 540	
Moisture removal (High)	Pints/hr.	5.3 / 5.2	
ELECTRICAL RATING			
Frequency	Hz	60	
Phase		Single	
Voltage rating	V	230 / 208	
Available voltage range	V	187 ~ 253	
Running amperes	A	8.7 / 9.3	9.0 / 9.6
Power input	W	1,920 / 1,860	1,980 / 1,940
Power factor	%	96 / 96	96 / 97
S.E.E.R.	BTU/Whr.	8.9 / 8.9	2.80 / 2.80 (COP)
Heat element	kW - HSPF	-	3.6 / 2.94 - 6.6 / 6 6
FEATURES			
Controls		Microcomputer	
Control switch		Indoor unit	
Temperature control		IC Thermostat	
Timer		ON/OFF , 12-hours	
Fan speeds	Indoor fan / Outdoor fan	3 / 1	
Air deflection	Horizontal / Vertical	Manual / Manual	
Air filter		Washable	
Compressor		Rotary	
Refrigerant (R-22) amount	lbs.(g)	3.91(1,770) + 0.176(80)(for quick air purge)	
Refrigerant control		Capillary tube	
Operation sound	In-Hi/Me/Lo dB-A	47 / 44 / 40	
	Out-Hi dB-A	54	
Refrigerant piping connections		Flare type	
Max allowable piping length at shipment	ft.(m)	33(10)	
Max. elevation difference between two units	ft.(m)	23 (7)	
Refrigerant pipe diameter o.d.	Narrow pipe in.(mm)	1/4 (6.35)	
	Wide pipe in.(mm)	1/2 (12.7)	
Refrigerant piping kit		Optional	
Accessories		-	
DIMENSIONS & WEIGHT		Indoor unit	Outdoor unit
Height	in.(mm)	26-25/32 (680)	24-13/16 (630)
Width	in.(mm)	43- 5/16 (1,100)	32-11/16 (830)
Depth	in.(mm)	8-15/32 (215)	12-13/32 (315)
Net weight	lbs.(kg)	70 (31.8)	134 (60.8)
Shipping volume	cu.ft.(cu.m)	11.7 (0.331)	10.4 (0.294)
Shipping weight (Approx.)	lbs.(kg)	97 (44.0)	143 (64.9)

DATA SUBJECT TO CHANGE WITHOUT NOTICE.

Remarks: Rated conditions : Cooling, Outdoor unit entering air temperature 95°F D.B./75°F W.B.
Indoor unit entering air temperature 80°F D.B./67°F W.B.
Heating, Outdoor unit entering air temperature 47°F D.B./43°F W.B.
Indoor unit entering air temperature 70°F D.B.

Downloaded from www.Manualslib.com manuals search engine

2) Major Component Specifications

Unit Model No.	FH1211X
Controller P.C.B.	POW-FH1212
Control circuit fuse	250V - 3A
Control Switch Assy	R3620110A
Indicator Lamp Assy	IND-FH1212

Unit Model No.		CH1211	
Defrost controller		POW-C92GH	
Compressor		Hermetic Rotary Type	
Compressor model No.		C-R91H2Q	
Source		115V, 60Hz, Single phase	
Pole		2	
Nominal output	W(H.P.)	900 (1-1/5)	
Compressor oil	cc	650 (Special oil for Rotary Compressor)	
Coil resistance (Ambient temp. 77°F)	Ω	C - R : 0.58 C - S : 2.80	
Protective Devices, Compressor		Internal line type	External line type
Overload relay model		-	MRA98693-9200
Operating temp.	Open °F	-	329 ± 9
	Close °F	-	156 ± 20
Operating amperes (Ambient temp. 77°F)		-	Trip in 6~16 sec. at 43 A
Run capacitor	μF	35	
	VAC	330	
Crankcase heater	V - W	-	

Unit Model No.		FH1211X	CH1211
Fan		Centrifugal	Propeller
Number....dia. (length)	mm	2....φ130, (L160)	1....φ400
Fan motor model		KFH6T-21A1SP	FT6-21C1PE
Source		115V, 60Hz, Single phase	
No. of pole....rpm. (115V)		6....930(Hi)	6....767
Nominal output	W	20	20
Coil resistance (Ambient temp. 68°F)	Ω	BLU - BRN : 100.0 BLU - VLT : 21.4 VLT - YEL : 12.4 YEL - PNK : 87.2	BLU - BRN : 62.5 BLU - PNK : 59.1
Safety Devices			
Fan motor, internal type Operating temp.	Open °F	266 ± 18	266 ± 18
	Close °F	174 ± 27	174 ± 27
Run capacitor	μF	4	8
	VAC	220	220

DATA SUBJECT TO CHANGE WITHOUT NOTICE.

Downloaded from www.Manualslib.com manuals search engine

Major Component Specifications

Unit Model No.	FH1212X
Controller P.C.B.	POW-FH1212
Control circuit fuse	250V - 3A
Control Switch Assy	R3620110A
Indicator Lamp Assy	IND-FH1212
Electrc heater	AH-122FH
Heater element	230V 1.0kW × 3

Unit Model No.		CH1212	
Defrost controller		POW-C92GH	
Compressor		Hermetic Rotary Type	
Compressor model No.		C-R91H6Q	
Source		230/208V, 60Hz, Single phase	
Pole		2	
Nominal output	W(H.P.)	900 (1-1/5)	
Compressor oil	cc	650 (Special oil for Rotary Compressor)	
Coil resistance (Ambient temp. 77°F)	Ω	C - R : 2.18 C - S : 6.39	
Protective Devices, Compressor		Internal line type	External line type
Overload relay model		-	MSI00AKU-9200
Operating temp.	Open °F	-	275 ± 9
	Close °F	-	156 ± 20
Operating amperes (Ambient temp. 77°F)		-	Trip in 6~16 sec. at 21.0 A
Run capacitor	μF	20	
	VAC	370	
Crankcase heater	V - W	-	

Unit Model No.		FH1212X	CH1212
Fan		Centrifugal	Propeller
Number....dia. (length)	mm	2....φ130, (L160)	1....φ400
Fan motor model		KFH6T-21A6SP	FT6-21E6P
Source		230/208V, 60Hz, Single phase	
No. of pole....rpm. (230/208V)		6....935/876(Hi.)	6....818/741
Nominal output	W	20	20
Coil resistance (Ambient temp. 68°F)	Ω	WHT - BRN : 383.9 WHT - VLT : 81.4 VLT - YEL : 45.2 YEL - PNK : 344.6	WHT - BRN : 184.2 WHT - PNK : 156.7
Safety Devices			
Fan motor, internal type Operating temp.	Open °F	248 ± 9	266 ± 18
	Close °F	171 ± 27	174 ± 27
Run capacitor	μF	1	2.5
	VAC	440	440

DATA SUBJECT TO CHANGE WITHOUT NOTICE.

Downloaded from www.Manualslib.com manuals search engine

Major Component Specifications

Unit Model No.	FH1812X
Controller P.C.B.	POW-FH1812
Control circuit fuse	250V - 3A
Control Switch Assy	R3620110A
Indicator Lamp Assy	IND-FH1212
Electric heater	AH-FH1812
Heater element	230V 1.2kW × 3

Unit Model No.		CH1812	
Defrost controller		POW-C92GH	
Compressor		Hermetic Rotary Type	
Compressor model No.		C-2R140H6S	
Source		230/208V, 60Hz, Single phase	
Pole		2	
Nominal output	W(H.P.)	1,400 (2)	
Compressor oil	cc	800 (Special oil for Rotary Compressor)	
Coil resistance (Ambient temp. 77°F)	Ω	C - R : 1.10 C - S : 1.95	
Protective Devices, Compressor		Internal line type	-
Overload relay model		-	-
Operating temp.	Open °F	320 ± 9	-
	Close °F	198 ± 27	-
Operating amperes (Ambient temp. 77°F)		-	-
Run capacitor	μF	35	
	VAC	400	
Crankcase heater	V - W	-	

Unit Model No.		FH1812X	CH1812
Fan		Centrifugal	Propeller
Number....dia. (length)	mm	2.... φ130, (L160)	1.... φ400
Fan motor model		KFH4T-31D6P	SG6S-51C6P
Source		230/208V, 60Hz, Single phase	
No. of pole....rpm. (230/208V)		4....1,307/1,184(Hi.)	6....1,000/953
Nominal output	W	30	50
Coil resistance (Ambient temp. 68°F)	Ω	WHT - BRN : 113.8 WHT - VLT : 31.3 VLT - YEL : 24.3 YEL - PNK : 128.8	WHT - BRN : 85.9 WHT - YEL : 73.7 YEL - PNK : 59.6
Safety Devices			
Fan motor, internal type Operating temp.	Open °F	248 ± 9	266 ± 18
	Close °F	171 ± 27	174 ± 27
Run capacitor	μF	1.5	2
	VAC	440	440

DATA SUBJECT TO CHANGE WITHOUT NOTICE.

Downloaded from www.Manualslib.com manuals search engine

3) Other Component Specifications

Relay (Heater relay)	G4E-2123T-US
Coil rated	DC 24V
Coil resistance Ω (at 68 °F)	533 ± 15%
Contact rated (2a)	AC 240V : 15A
Unit Model No.	FH1212X, FH1812X

Relay (Power relay)	DFU24D1-F(M)
Coil rated	DC 24V
Coil resistance Ω (at 68 °F)	650 ± 10%
Contact rated (1a)	AC100V, AC200V, } { FLA 20A LRA 65A; AC250V, { FLA 20A LRA 60A
	20A 265VAC, 275VAC
	2 HP 240VAC, 265VAC
Unit Model No.	CH1211, CH1212

Relay (Power relay)	DFU24D1F
Coil rated	DC 24V
Coil resistance Ω (at 68 °F)	650 ± 10%
Contact rated (1c)	AC100V, AC200V, } { FLA 20A LRA 65A; AC250V, { FLA 20A LRA 60A
	20A 265VAC, 275VAC
	2 HP 240VAC, 265VAC
Unit Model No.	CH1812

Relay (Compressor starting relay)	AMVL300A
Coil rated	AC 330V , 60HZ
Coil resistance kΩ (at 73°F)	13.3 ± 2%
Contact rated	20A AC
Operating voltage	AC 215~247V 60HZ
Return voltage	AC 69~132V 60HZ
Unit Model No.	CH1812

Thermistor (PTC)	PS2A E20-470
Rated max. voltage	AC 250V
max. ampere	11A
Resistance Ω	77°F 47 ± 25%
	248°F 60 ± 25%
	266°F 700 ± 25%
Unit Model No.	CH1211

Thermistor (PTC)	TDK 101YV
Rated max. voltage	AC 400V
max. ampere	11.5A
Resistance Ω (at 77°F)	100 ± 25%
Unit Model No.	CH1212

Downloaded from www.Manualslib.com manuals search engine

Other Component Specifications

Thermister (Indoor coil temp. sensor)	NTC-51H-S5
Resistance kΩ	32°F 185.5 ± 5% 86°F 45.1 ± 5% 50°F 112.2 ± 5% 104°F 29.7 ± 5% 68°F 70.1 ± 5% 122°F 20.0 ± 5%
Unit Model No.	FH1211X, FH1212X, FH1812X

Thermister (Room temp. sensor)	OCS5K-UL
Resistance kΩ	32°F 16.5 ± 5% 77°F 5.0 ± 5% 50°F 10.0 ± 5% 86°F 4.0 ± 5% 68°F 6.3 ± 5% 104°F 2.6 ± 5%
Unit Model No.	FH1211X, FH1212X, FH1812X

Transformer	ATR-J121U1
Rating Primary	AC 115V 60HZ
Secondary	19V 0.63A
Capacity	12VA
Resistance Ω	Primary (WHT - WHT): 36.5
(Ambient temp. 77 °F)	Secondary (BRN - BRN): 1.2
Thermal Cutoff	259 °F 2A 250V
Unit Model No.	FH1211X

Transformer	ATR-J122U
Rating Primary	AC 220V 60HZ
Secondary	19V 0.63A
Capacity	12VA
Resistance Ω	Primary (WHT - WHT): 143.5
(Ambient temp. 79 °F)	Secondary (BRN - BRN): 1.2
Thermal Cutoff	259 °F 2A 250V
Unit Model No.	FH1212X, FH1812X

Thermostat (Defrost thermo.)	TRS-12M160UL
Operating Temps. °F	ON 54 ± 4
	DIFF. 14 below
Contact rated	AC 120V 0.5A
Unit Model No.	CH1211, CH1212, CH1812

Thermostat (Fan speed control thermo.)	MQT5SWU
Operating Temps. °F	(ON at temperature rise) 81 +0,-5 DIFF. 6 +0,-5
	(ON at temperature down) 59 ± 4 DIFF. 5 +3,-2
Contact rated	AC 230V 3A
Unit Model No.	CH1812

Downloaded from www.Manualslib.com manuals search engine

Other Component Specifications

Solenoid Valve (4-way valve)	LB19003(Coil) , V26 9100(Valve)
Rating	AC 115V , 60HZ , 5W
Coil resistance Ω (at 68 °F)	500
Unit Model No.	CH1211

Solenoid Valve (4-way valve)	LB19007(Coil) , V26 9100(Valve)
Rating	AC 208/230V , 60HZ , 5W
Coil resistance Ω (at 68 °F)	1,770
Unit Model No.	CH1212, CH1812

Heater Protector

Unit Model No.	Thermostat				Fuse
FH1212X (AH-122FH) FH1812X (AH-FH1812)	INT01L0606	Rating	AC	250V , 16A	SF129U
		Operating Temps.	OFF	158 ± 5°F	Cutoff 264 ± 4°F
			ON	140 ± 7°F	

Downloaded from www.Manualslib.com manuals search engine

2. OPERATING RANGE

	Temperature	Indoor air intake	Outdoor air intake
Cooling	Maximum	95°F DB / 71°F WB	115°F DB
	Minimum	67°F DB / 57°F WB	67°F DB
Heating	Maximum	80°F DB / 67°F WB	75°F DB / 65°F WB
	Minimum	- DB/ - WB	17°F DB / 15°F WB

Downloaded from www.Manualslib.com manuals search engine

3. CONSTRUCTION OF THE UNIT

INDOOR UNIT **FH1211X**

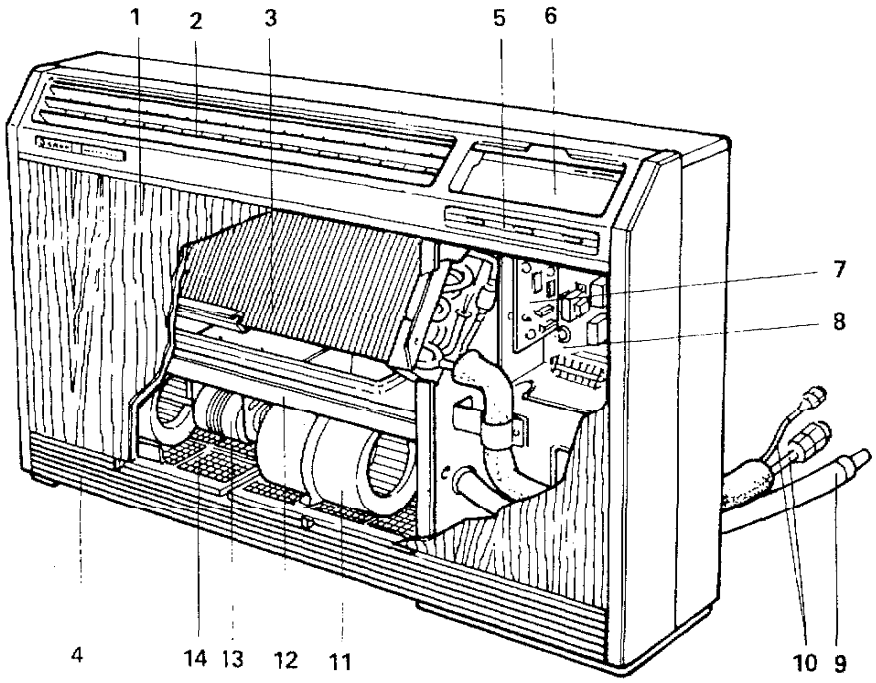

1. Casing
2. Air outlet
3. Evaporator (= Indoor heat exchanger)
4. Air intake
5. Operation indoor lamp
6. Control panel
7. PCB ass'y
8. Electrical component box
9. Drain hose
10. Refrigerant piping
11. Blower
12. Drain pan
13. Fan motor
14. Air filter (Slide-out)

INDOOR UNIT **FH1212X/FH1812X**

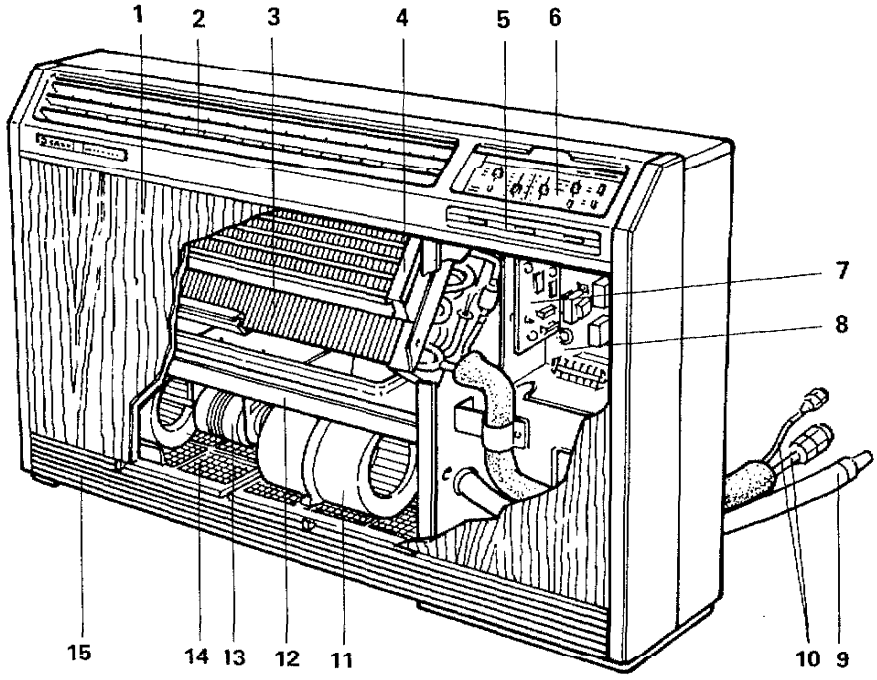

1. Casing
2. Air outlet
3. Evaporator (= Indoor heat exchanger)
4. Heater
5. Operation indoor lamp
6. Control panel
7. PCB ass'y
8. Electrical component box
9. Drain hose
10. Refrigerant piping
11. Blower
12. Drain pan
13. Fan motor
14. Air filter (slide-out)
15. Air intake

Downloaded from www.Manualslib.com manuals search engine

OUTDOOR UNIT CH1211/CH1212

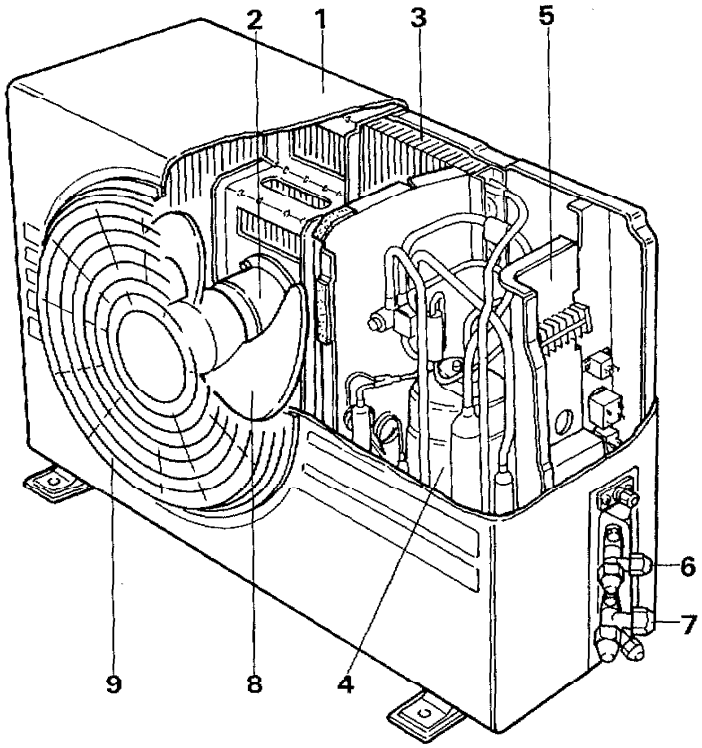

1. Casing
2. Fan motor
3. Condenser (= Outdoor heat exchanger)
4. Compressor
5. Electrical component box
6. Service valve (Narrow pipe)
7. Service valve (Wide pipe)
8. Outdoor fan
9. Fan guard

OUTDOOR UNIT CH1812

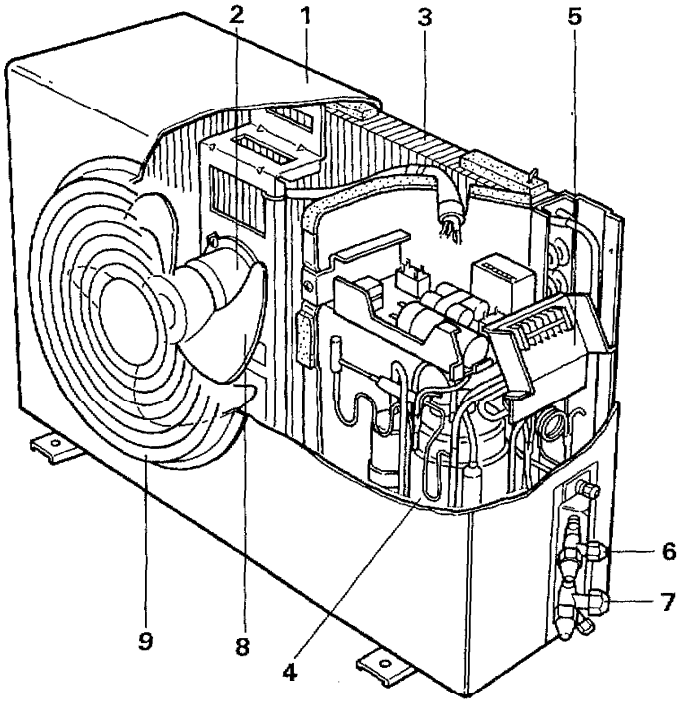

1. Casing
2. Fan motor
3. Condenser (= Outdoor heat exchanger)
4. Compressor
5. Electrical component box
6. Service valve (Narrow pipe)
7. Service valve (Wide pipe)
8. Outdoor fan
9. Fan guard

Downloaded from www.Manualslib.com manuals search engine

4. DIMENSIONAL DATA

Indoor Unit : FH1211X/FH1212X/FH1812X

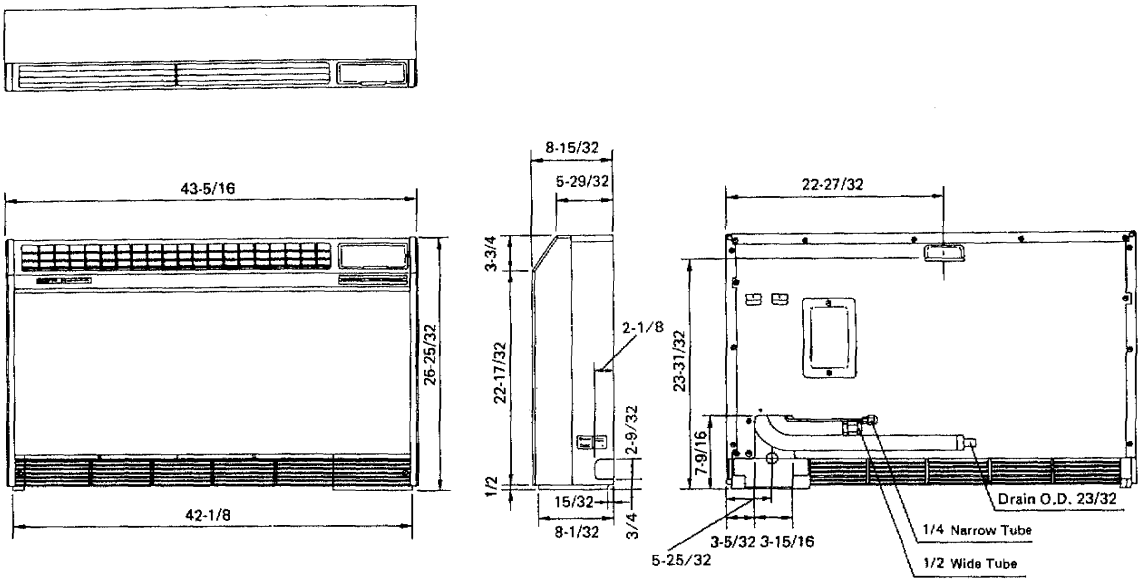

Downloaded from www.Manualslib.com manuals search engine

DIMENSIONAL DATA

Outdoor Unit : CH1211/CH1212

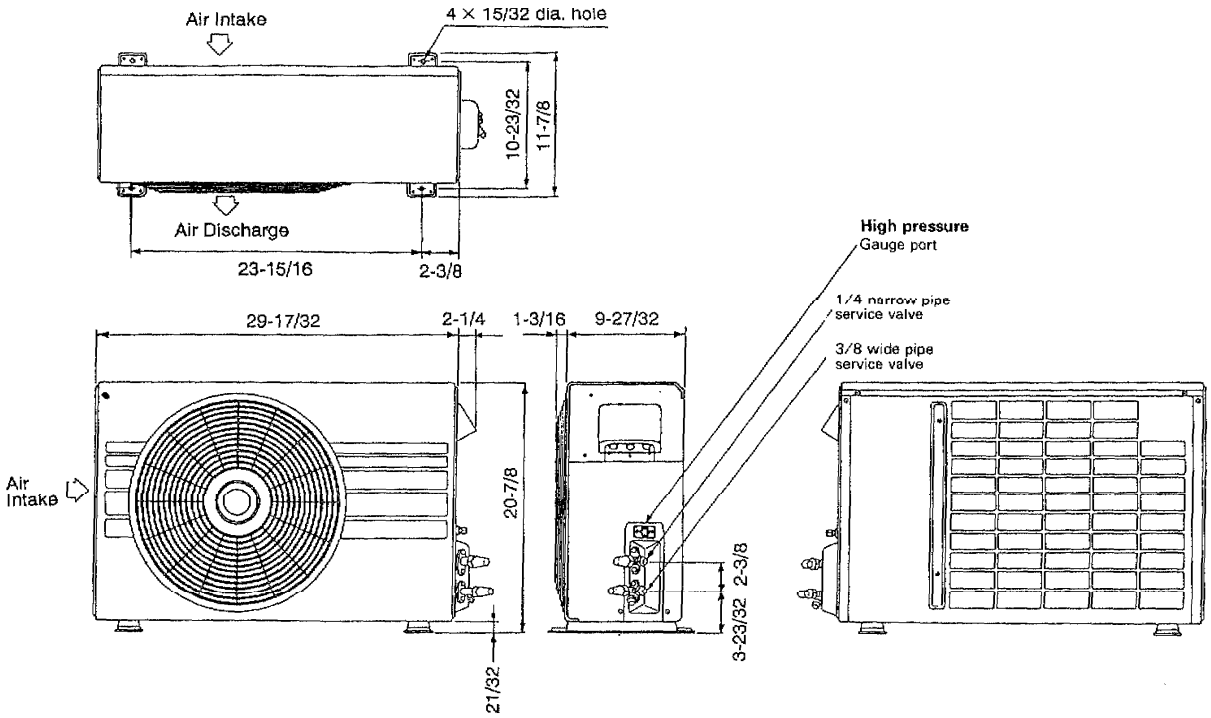

Outdoor Unit : CH1812

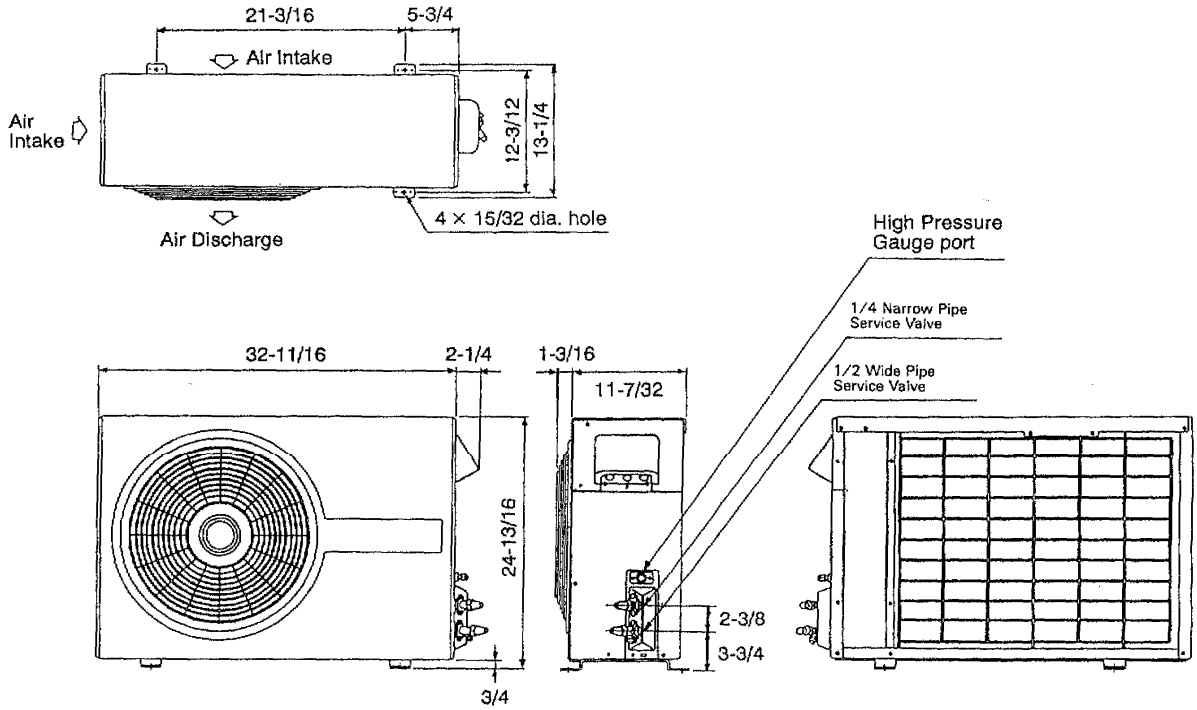

Downloaded from www.Manualslib.com manuals search engine

5. CAPACITY

1) COOLING CAPACITY

1PHASE 60Hz 115 V MODEL NAME : 12FH11X

RATED CAPACITY : 11,400 BTU/H AIR FLOW RATE : 350 CFM							
EVAPORATOR		CONDENSER					
ENTERING TEMP °F(°C)		AMBIENT TEMP °F(°C)					
W.B	D.B		75(23.9)	85(29.4)	95(35)	105(40.6)	115(46.1)
59 (15.0)		TC	11,290	10,770	10,260	9,680	8,890
		KW	0.89	0.97	1.06	1.15	1.26
	72 (22.2)	SHC	8,890	8,640	8,400	8,130	7,780
	76 (24.4)	SHC	10,190	9,950	9,710	9,440	8,890
	80 (26.7)	SHC	11,290	10,770	10,260	9,680	8,890
	84 (28.9)	SHC	11,290	10,770	10,260	9,680	8,890
	88 (31.1)	SHC	11,290	10,770	10,260	9,680	8,890
63 (17.2)		TC	11,670	11,310	10,860	10,270	9,460
		KW	0.90	0.99	1.08	1.17	1.29
	72 (22.2)	SHC	7,330	7,170	6,980	6,730	6,390
	76 (24.4)	SHC	8,640	8,480	8,290	8,030	7,690
	80 (26.7)	SHC	10,000	9,840	9,650	9,400	9,060
	84 (28.9)	SHC	11,310	11,150	10,860	10,270	9,460
	88 (31.1)	SHC	11,670	11,310	10,860	10,270	9,460
67 (19.4)		TC	11,990	11,800	* 11,400	10,770	10,030
		KW	0.91	0.99	1.09	1.18	1.31
	72 (22.2)	SHC	5,740	5,660	5,500	5,260	4,970
	76 (24.4)	SHC	7,040	6,970	6,810	6,560	6,280
	80 (26.7)	SHC	8,410	8,330	8,170	7,930	7,640
	84 (28.9)	SHC	9,710	9,640	9,480	9,230	8,950
	88 (31.1)	SHC	11,020	10,940	10,780	10,540	10,030
71 (21.7)		TC	12,370	12,160	11,860	11,320	10,660
		KW	0.92	1.00	1.10	1.22	1.34
	72 (22.2)	SHC	4,100	4,020	3,910	3,720	3,490
	76 (24.4)	SHC	5,400	5,330	5,220	5,030	4,800
	80 (26.7)	SHC	6,770	6,690	6,580	6,390	6,160
	84 (28.9)	SHC	8,070	8,000	7,890	7,700	7,470
	88 (31.1)	SHC	9,380	9,300	9,190	9,000	8,770
75 (23.9)		TC	12,810	12,470	12,200	11,760	11,290
		KW	0.93	1.02	1.12	1.24	1.37
	76 (24.4)	SHC	3,780	3,740	3,650	3,510	3,360
	80 (26.7)	SHC	5,150	5,100	5,010	4,870	4,720
	84 (28.9)	SHC	6,450	6,410	6,320	6,180	6,030
	88 (31.1)	SHC	7,750	7,710	7,620	7,480	7,330

TC:Total Cooling Capacity (BTU/H)
SHC:Sensible Heat Capacity (BTU/H)
KW:Compressor Input (KW)
Rating conditions(*MARK) are
:Outdoor Ambient Temp.95°F D.B.
:Indoor Unit Entering Air Temp.80°F D.B./67°F W.B.

Downloaded from www.Manualslib.com manuals search engine

COOLING CAPACITY

1PHASE 60Hz 230 V MODEL NAME : 12FH12X

RATED CAPACITY : 11,400 BTU/H AIR FLOW RATE : 350 CFM							
EVAPORATOR		CONDENSER					
ENTERING TEMP °F(°C)		AMBIENT TEMP °F(°C)					
W.B	D.B		75(23.9)	85(29.4)	95(35)	105(40.6)	115(46.1)
59 (15.0)		TC	11,290	10,770	10,260	9,680	8,890
		KW	0.88	0.96	1.05	1.13	1.25
	72 (22.2)	SHC	8,900	8,650	8,410	8,140	7,790
	76 (24.4)	SHC	10,200	9,960	9,720	9,450	8,890
	80 (26.7)	SHC	11,290	10,770	10,260	9,680	8,890
	84 (28.9)	SHC	11,290	10,770	10,260	9,680	8,890
	88 (31.1)	SHC	11,290	10,770	10,260	9,680	8,890
63 (17.2)		TC	11,670	11,310	10,860	10,270	9,460
		KW	0.89	0.98	1.06	1.16	1.27
	72 (22.2)	SHC	7,340	7,180	6,990	6,740	6,400
	76 (24.4)	SHC	8,650	8,490	8,300	8,040	7,700
	80 (26.7)	SHC	10,010	9,850	9,660	9,410	9,070
	84 (28.9)	SHC	11,320	11,160	10,860	10,270	9,460
	88 (31.1)	SHC	11,670	11,310	10,860	10,270	9,460
67 (19.4)		TC	11,990	11,800	* 11,400	10,770	10,030
		KW	0.90	0.98	1.08	1.17	1.30
	72 (22.2)	SHC	5,750	5,670	5,510	5,270	4,980
	76 (24.4)	SHC	7,060	6,980	6,820	6,570	6,290
	80 (26.7)	SHC	8,420	8,340	8,180	7,940	7,650
	84 (28.9)	SHC	9,720	9,650	9,490	9,240	8,960
	88 (31.1)	SHC	11,030	10,950	10,790	10,550	10,030
71 (21.7)		TC	12,370	12,160	11,860	11,320	10,660
		KW	0.91	0.99	1.09	1.20	1.33
	72 (22.2)	SHC	4,110	4,040	3,930	3,730	3,500
	76 (24.4)	SHC	5,410	5,340	5,230	5,040	4,810
	80 (26.7)	SHC	6,780	6,700	6,590	6,400	6,170
	84 (28.9)	SHC	8,080	8,010	7,900	7,710	7,480
	88 (31.1)	SHC	9,390	9,310	9,200	9,010	8,780
75 (23.9)		TC	12,610	12,470	12,200	11,760	11,290
		KW	0.92	1.01	1.11	1.23	1.36
	76 (24.4)	SHC	3,790	3,750	3,660	3,520	3,370
	80 (26.7)	SHC	5,160	5,110	5,020	4,880	4,730
	84 (28.9)	SHC	6,460	6,420	6,330	6,190	6,040
	88 (31.1)	SHC	7,770	7,720	7,630	7,490	7,340

TC:Total Cooling Capacity (BTU/H)
SHC:Sensible Heat Capacity (BTU/H)
KW:Compressor Input (KW)
Rating conditions(*MARK) are
:Outdoor Ambient Temp.95°F D.B.
:Indoor Unit Entering Air Temp.80°F D.B./67°F W.B.

Downloaded from www.Manualslib.com manuals search engine

COOLING CAPACITY

1PHASE 60Hz 208 V MODEL NAME : 12FH12X

RATED CAPACITY : 11,200 BTU/H AIR FLOW RATE : 340 CFM							
EVAPORATOR		CONDENSER					
ENTERING TEMP °F(°C)		AMBIENT TEMP °F(°C)					
W.B	D.B		75(23.9)	85(29.4)	95(35)	105(40.6)	115(46.1)
59 (15.0)		TC	11,090	10,580	10,080	9,510	8,740
		KW	0.87	0.95	1.04	1.12	1.24
	72 (22.2)	SHC	8,720	8,480	8,240	7,980	7,630
	76 (24.4)	SHC	9,990	9,750	9,520	9,250	8,740
	80 (26.7)	SHC	11,090	10,580	10,080	9,510	8,740
	84 (28.9)	SHC	11,090	10,580	10,080	9,510	8,740
	88 (31.1)	SHC	11,090	10,580	10,080	9,510	8,740
63 (17.2)		TC	11,470	11,110	10,670	10,090	9,300
		KW	0.88	0.97	1.05	1.14	1.26
	72 (22.2)	SHC	7,210	7,050	6,860	6,610	6,280
	76 (24.4)	SHC	8,480	8,320	8,130	7,880	7,550
	80 (26.7)	SHC	9,810	9,650	9,460	9,210	8,880
	84 (28.9)	SHC	11,080	10,920	10,670	10,090	9,300
	88 (31.1)	SHC	11,470	11,110	10,670	10,090	9,300
67 (19.4)		TC	11,780	11,590	* 11,200	10,580	9,860
		KW	0.89	0.97	1.07	1.16	1.29
	72 (22.2)	SHC	5,650	5,570	5,420	5,180	4,900
	76 (24.4)	SHC	6,920	6,850	6,690	6,450	6,170
	80 (26.7)	SHC	8,250	8,180	8,020	7,780	7,500
	84 (28.9)	SHC	9,530	9,450	9,290	9,050	8,770
	88 (31.1)	SHC	10,800	10,720	10,570	10,330	9,860
71 (21.7)		TC	12,150	11,950	11,650	11,120	10,470
		KW	0.90	0.99	1.08	1.19	1.32
	72 (22.2)	SHC	4,050	3,980	3,870	3,680	3,450
	76 (24.4)	SHC	5,320	5,250	5,140	4,950	4,720
	80 (26.7)	SHC	6,650	6,580	6,470	6,280	6,050
	84 (28.9)	SHC	7,920	7,850	7,740	7,560	7,330
	88 (31.1)	SHC	9,200	9,120	9,010	8,830	8,600
75 (23.9)		TC	12,390	12,250	11,980	11,560	11,090
		KW	0.92	1.00	1.10	1.22	1.35
	76 (24.4)	SHC	3,740	3,690	3,610	3,470	3,320
	80 (26.7)	SHC	5,070	5,020	4,940	4,800	4,650
	84 (28.9)	SHC	6,340	6,300	6,210	6,070	5,920
	88 (31.1)	SHC	7,610	7,570	7,480	7,340	7,190

TC:Total Cooling Capacity (BTU/H)
SHC:Sensible Heat Capacity (BTU/H)
KW:Compressor Input (KW)

Rating conditions(*MARK) are
:Outdoor Ambient Temp.95°F D.B.
:Indoor Unit Entering Air Temp.80°F D.B./67°F W.B.

Downloaded from www.Manualslib.com manuals search engine

COOLING CAPACITY

1PHASE 60Hz 230 V MODEL NAME : 18FH12X

RATED CAPACITY : 17,000 BTU/H AIR FLOW RATE : 550 CFM							
EVAPORATOR		CONDENSER					
ENTERING TEMP °F(°C)		AMBIENT TEMP °F(°C)					
W.B	D.B		75(23.9)	85(29.4)	95(35)	105(40.6)	115(46.1)
59 (15.0)		TC	16,830	16,070	15,300	14,430	13,260
		KW	1.41	1.54	1.68	1.82	2.00
	72 (22.2)	SHC	13,150	12,790	12,430	12,020	11,490
	76 (24.4)	SHC	15,070	14,710	14,350	13,950	13,260
	80 (26.7)	SHC	16,830	16,070	15,300	14,430	13,260
	84 (28.9)	SHC	16,830	16,070	15,300	14,430	13,260
	88 (31.1)	SHC	16,830	16,070	15,300	14,430	13,260
63 (17.2)		TC	17,410	16,860	16,200	15,320	14,110
		KW	1.43	1.57	1.71	1.85	2.04
	72 (22.2)	SHC	10,850	10,620	10,330	9,950	9,440
	76 (24.4)	SHC	12,780	12,540	12,250	11,870	11,360
	80 (26.7)	SHC	14,790	14,550	14,260	13,880	13,370
	84 (28.9)	SHC	16,710	16,470	16,180	15,320	14,110
	88 (31.1)	SHC	17,410	16,860	16,200	15,320	14,110
67 (19.4)		TC	17,880	17,600	* 17,000	16,070	14,960
		KW	1.44	1.58	1.73	1.88	2.09
	72 (22.2)	SHC	8,500	8,380	8,140	7,780	7,350
	76 (24.4)	SHC	10,420	10,300	10,070	9,700	9,270
	80 (26.7)	SHC	12,430	12,320	12,080	11,710	11,280
	84 (28.9)	SHC	14,350	14,240	14,000	13,630	13,210
	88 (31.1)	SHC	16,280	16,160	15,920	15,560	14,960
71 (21.7)		TC	18,450	18,140	17,680	16,880	15,900
		KW	1.46	1.60	1.75	1.93	2.13
	72 (22.2)	SHC	6,070	5,960	5,790	5,510	5,160
	76 (24.4)	SHC	7,990	7,880	7,720	7,430	7,080
	80 (26.7)	SHC	10,000	9,890	9,730	9,440	9,090
	84 (28.9)	SHC	11,930	11,820	11,650	11,360	11,020
	88 (31.1)	SHC	13,850	13,740	13,570	13,290	12,940
75 (23.9)		TC	18,800	18,600	18,190	17,540	16,830
		KW	1.48	1.62	1.78	1.98	2.18
	76 (24.4)	SHC	5,590	5,530	5,390	5,180	4,960
	80 (26.7)	SHC	7,600	7,540	7,400	7,190	6,970
	84 (28.9)	SHC	9,530	9,460	9,330	9,120	8,890
	88 (31.1)	SHC	11,450	11,380	11,250	11,040	10,810

TC:Total Cooling Capacity (BTU/H)
SHC:Sensible Heat Capacity (BTU/H)
KW:Compressor Input (KW)

Rating conditions(*MARK) are
:Outdoor Ambient Temp.95°F D.B.
:Indoor Unit Entering Air Temp.80°F D.B./67°F W.B.

Downloaded from www.Manualslib.com manuals search engine

COOLING CAPACITY

1PHASE 60Hz 208 V MODEL NAME : 18FH12X

RATED CAPACITY : 16,500 BTU/H AIR FLOW RATE : 540 CFM							
EVAPORATOR		CONDENSER					
ENTERING TEMP °F(°C)		AMBIENT TEMP °F(°C)					
W.B	D.B		75(23.9)	85(29.4)	95(35)	105(40.6)	115(46.1)
59 (15.0)		TC	16,340	15,590	14,850	14,010	12,870
		KW	1.38	1.51	1.64	1.78	1.95
	72 (22.2)	SHC	12,850	12,500	12,150	11,760	11,240
	76 (24.4)	SHC	14,740	14,390	14,040	13,650	12,870
	80 (26.7)	SHC	16,340	15,590	14,850	14,010	12,870
	84 (28.9)	SHC	16,340	15,590	14,850	14,010	12,870
	88 (31.1)	SHC	16,340	15,590	14,850	14,010	12,870
63 (17.2)		TC	16,900	16,370	15,720	14,870	13,700
		KW	1.39	1.53	1.67	1.81	1.99
	72 (22.2)	SHC	10,590	10,360	10,080	9,720	9,230
	76 (24.4)	SHC	12,490	12,260	11,980	11,610	11,120
	80 (26.7)	SHC	14,470	14,240	13,960	13,590	13,100
	84 (28.9)	SHC	16,360	16,130	15,720	14,870	13,700
	88 (31.1)	SHC	16,900	16,370	15,720	14,870	13,700
67 (19.4)		TC	17,360	17,080	* 16,500	15,590	14,520
		KW	1.41	1.54	1.68	1.83	2.04
	72 (22.2)	SHC	8,280	8,170	7,940	7,580	7,170
	76 (24.4)	SHC	10,170	10,060	9,830	9,480	9,070
	80 (26.7)	SHC	12,150	12,040	11,810	11,460	11,050
	84 (28.9)	SHC	14,050	13,940	13,710	13,350	12,940
	88 (31.1)	SHC	15,940	15,830	15,600	15,250	14,520
71 (21.7)		TC	17,900	17,610	17,160	16,380	15,430
		KW	1.42	1.56	1.71	1.88	2.08
	72 (22.2)	SHC	5,900	5,790	5,630	5,350	5,020
	76 (24.4)	SHC	7,790	7,680	7,520	7,250	6,910
	80 (26.7)	SHC	9,770	9,660	9,500	9,230	8,890
	84 (28.9)	SHC	11,670	11,560	11,400	11,120	10,790
	88 (31.1)	SHC	13,560	13,450	13,290	13,020	12,680
75 (23.9)		TC	18,250	18,050	17,660	17,030	16,340
		KW	1.45	1.58	1.73	1.93	2.13
	76 (24.4)	SHC	5,440	5,370	5,240	5,040	4,820
	80 (26.7)	SHC	7,420	7,350	7,220	7,020	6,800
	84 (28.9)	SHC	9,310	9,250	9,120	8,920	8,690
	88 (31.1)	SHC	11,200	11,140	11,010	10,810	10,590

TC:Total Cooling Capacity (BTU/H)
SHC:Sensible Heat Capacity (BTU/H)
KW:Compressor Input (KW)
Rating conditions(*MARK) are
:Outdoor Ambient Temp.95°F D.B.
:Indoor Unit Entering Air Temp.80°F D.B./67°F W.B.

Downloaded from www.Manualslib.com manuals search engine

CAPACITY

2) HEATING CAPACITY

1 Phase 60Hz 115V MODEL NAME: 12FH11X

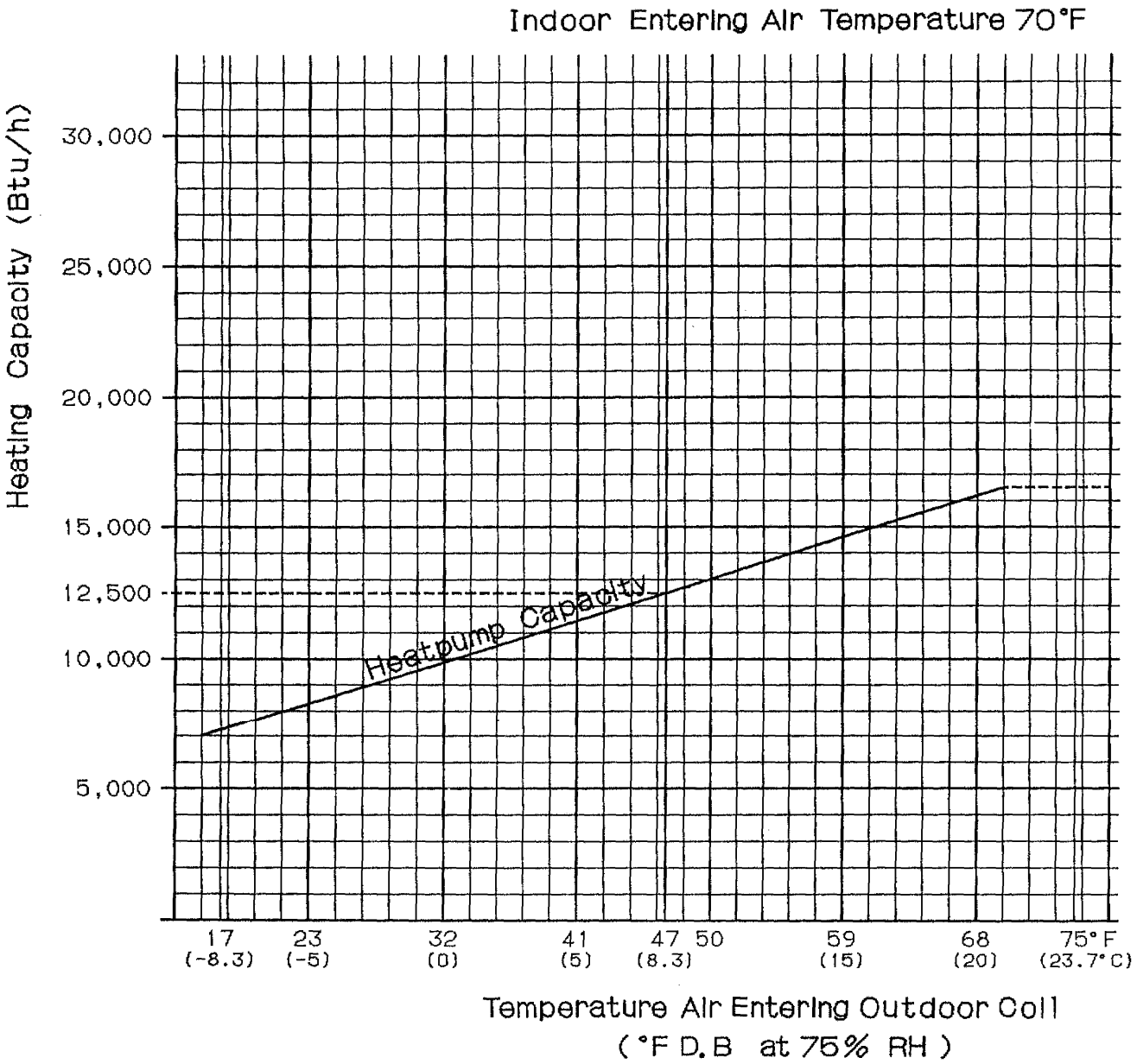

Downloaded from www.Manualslib.com manuals search engine

HEATING CAPACITY

1 Phase 60Hz 230V MODEL NAME: 12FH12X

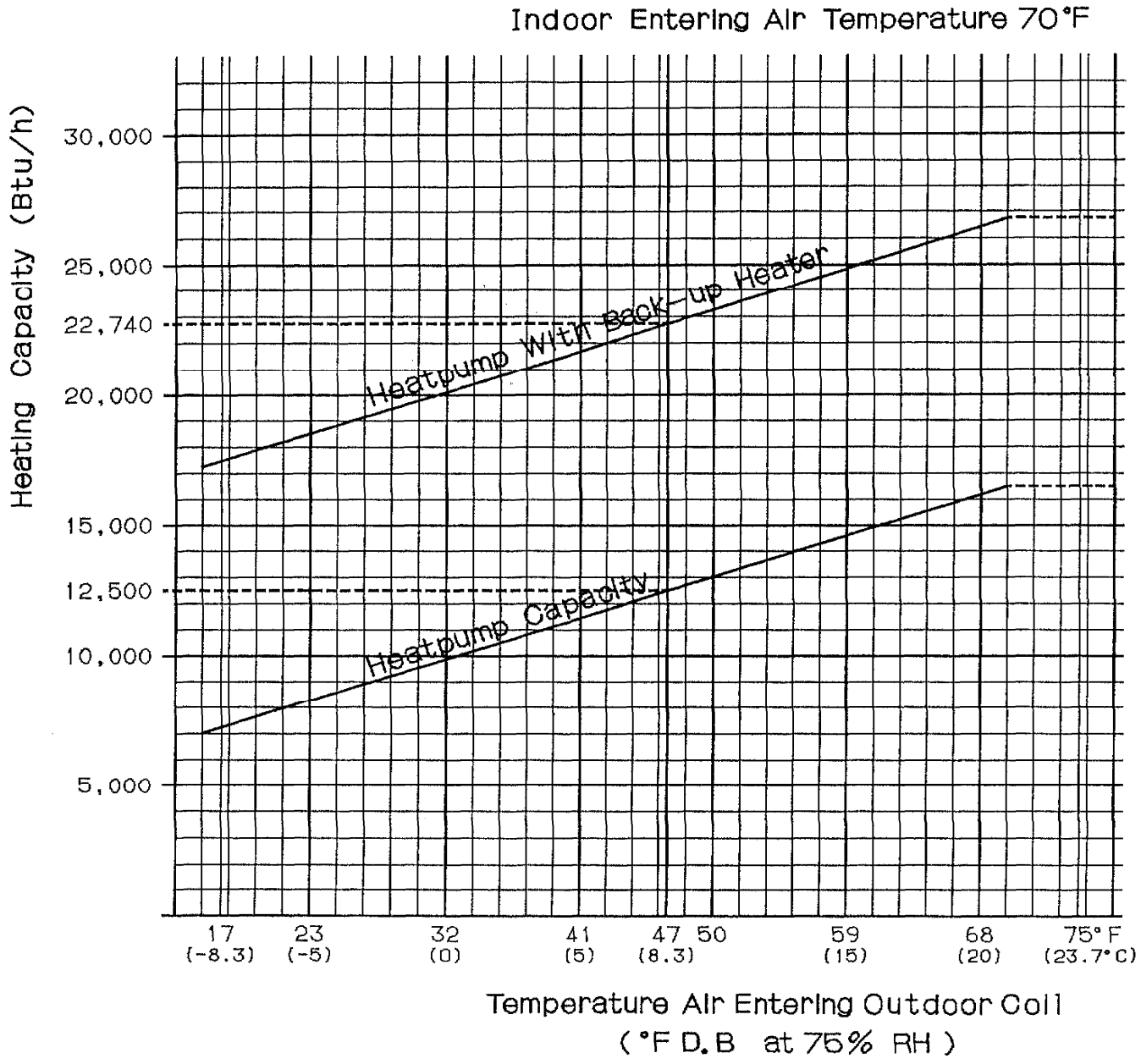

Downloaded from www.Manualslib.com manuals search engine

HEATING CAPACITY

1 Phase 60Hz 208V MODEL NAME: 12FH12X

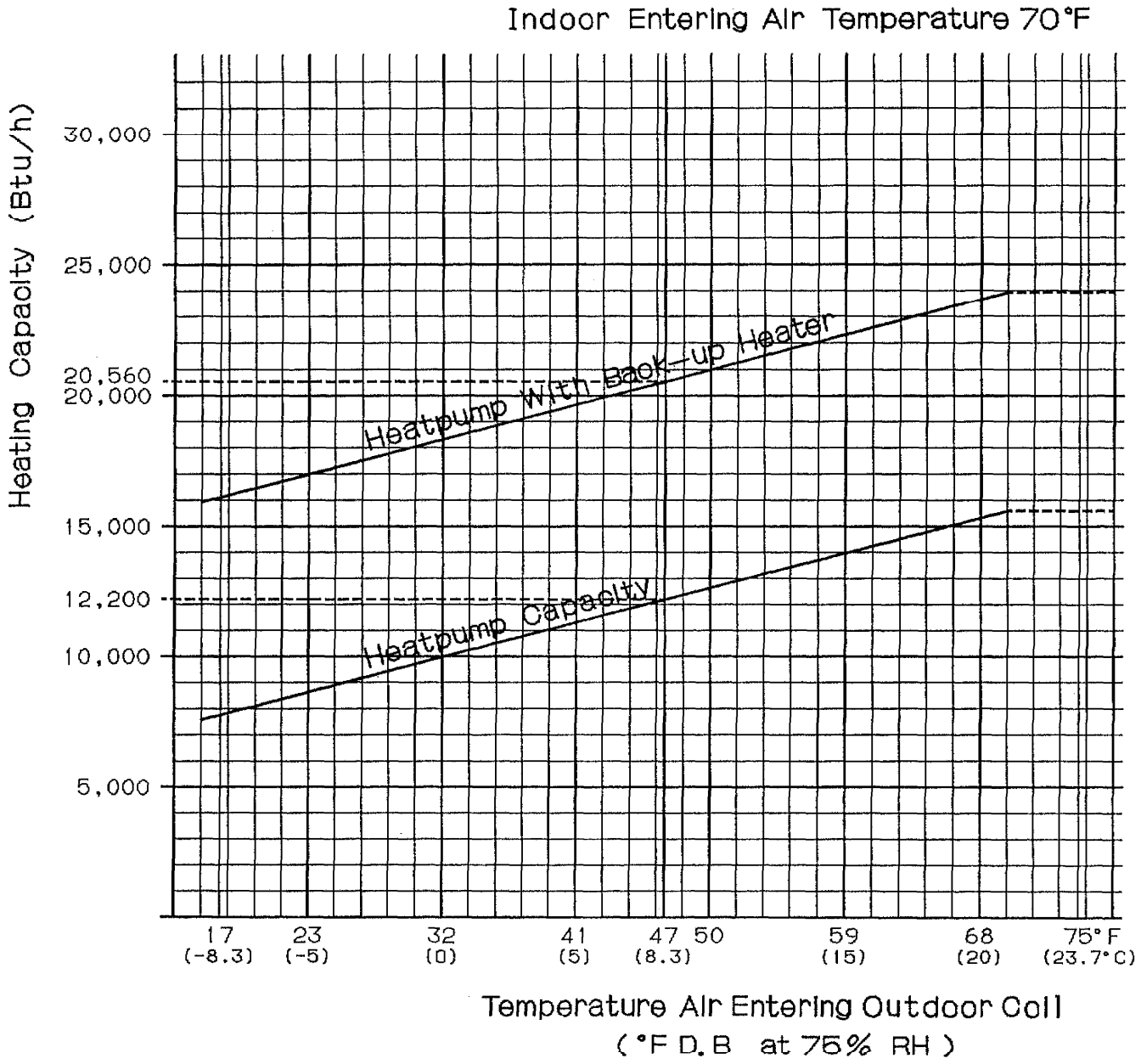

Downloaded from www.Manualslib.com manuals search engine

HEATING CAPACITY

1 Phase 60Hz 230V - MODEL NAME: 18FH12X

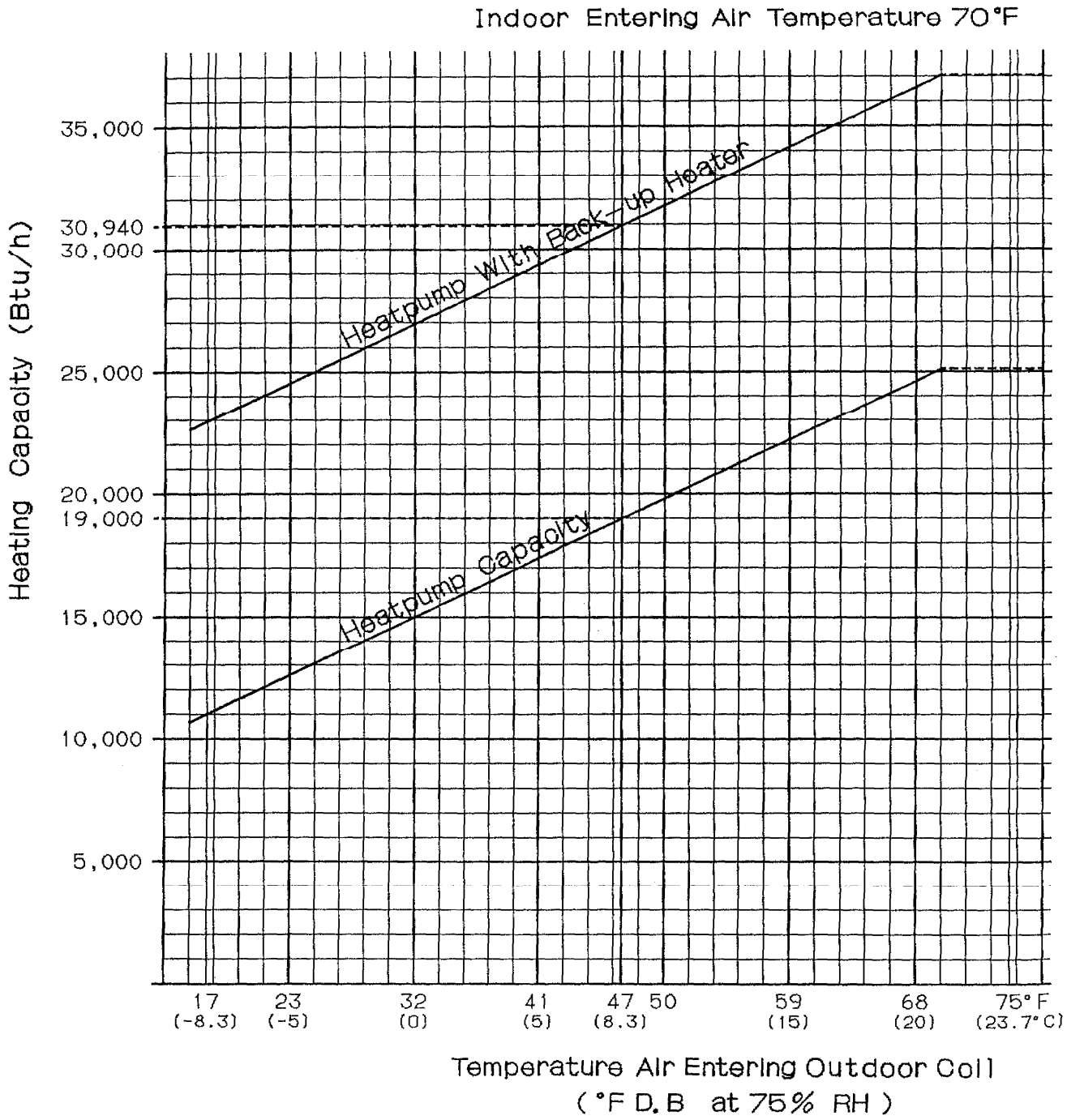

Downloaded from www.Manualslib.com manuals search engine

HEATING CAPACITY

1 Phase 60Hz 208V MODEL NAME: 18FH12X

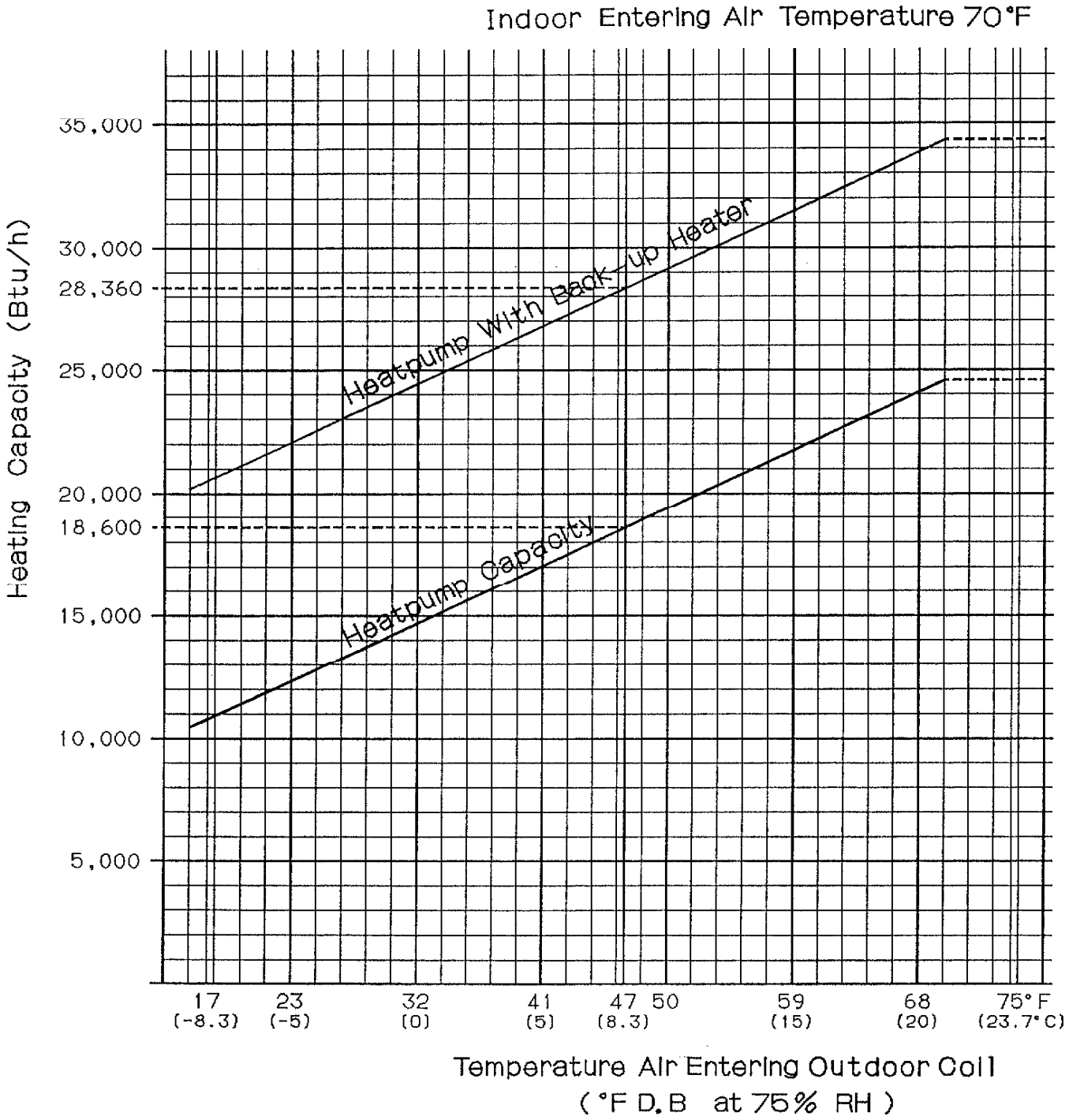

Downloaded from www.Manualslib.com manuals search engine

6. OPERATING INSTRUCTIONS

Controls and Indicators

A. OPERATION BUTTON

This button is used to turn the heat pump ON/OFF

B. MODE SELECTOR

This has four options:

AUTO:	When this setting is selected, the heat pump calculates the difference between the thermostat setting and the room temperature and automatically switches to the "cool" or "heat" mode as appropriate.
HEAT:	Used for normal heating operation.
COOL:	Used for normal cooling operation.
FAN:	Choose this setting to run the fan only, without the heating or cooling function.

C. OPERATION SELECTOR

This has five options:

TIMER ON:	Used to start the system at the set time.
TIMER OFF:	Used to stop the system at the set time.
NIGHT SETBACK:	Used for programmed energy saving operation at night.
MANUAL:	Used for conventional temperature control operation using the thermostat.

D. SERVICE TEST RUN SWITCH

This is used for servicing the heat pump. During normal operation, this switch must be set in the RUN position. If the heat pump is used with the switch in the TEST RUN position, it will not operate normally.

E. TIMER LAMP

This lamp lights when the system is operating on the timer.

F. NIGHT SETBACK LAMP

This lamp lights when the NIGHT SETBACK mode is selected.

G. THERMOSTAT KNOB

You can regulate the room temperature as desired by adjusting this knob. The numbers constitute the temperature scale (°F).

H. TIMER SET KNOB

This control is used to set the time at which you wish the heat pump to go on or off. Each number on the scale shows setting hour.

I. FAN SPEED SELECTOR

AUTO:	In this mode the fan speed is set automatically.
HIGH MED.: LOW	You can manually select the desired fan speed.

J. COOLING OPERATION LAMP

This lamp lights when the "COOL" mode is selected.

K. HEATING OPERATION LAMP

This lamp lights when the "HEAT" mode is selected.

L. STANDBY LAMP

This lamp lights at the beginning of heating and when the system is in defrosting.

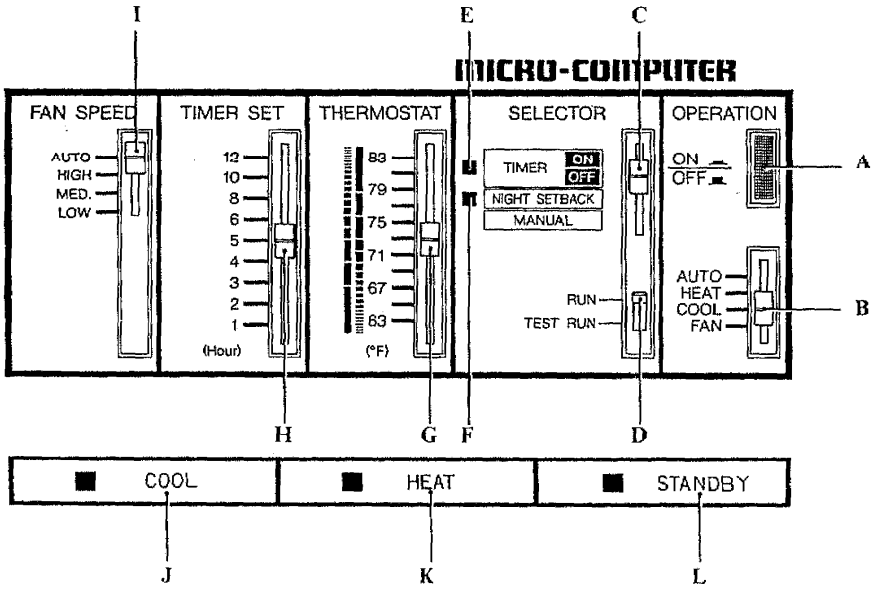

Downloaded from www.Manualslib.com manuals search engine

Operation Thumbnails

By setting this heat pump once to the desired temperature, it will automatically regulate the room temperature to that value. Thus you can operate the heat pump or stop it by simply pressing the OPERATION ON/OFF button.

First, open the door of the remote control unit to gain access to the control panel. Next, carry out the following steps while referring to the sub-section "Controls and Indicators" on the previous page.

What you wish to do	How to do it	What will happen
• Start the heat pump to get the desired room temperature very easily.	1. Set the "B" knob to AUTO. 2. Set the "C" knob to MANUAL. 3. Set the "I" knob to AUTO. 4. Set the "G" knob to the desired temperature. 5. Press the "A" OPERATION ON/OFF button.	If the room temperature is higher than the thermostat setting, the "J" lamp will light and after a few minutes cooling will begin. If, on the other hand, the room temperature is lower than the thermostat setting, the "K" lamp will light and heating will begin.
• To stop the heat pump immediately while it is operating	1. Press the "A" OPERATION ON/OFF button.	The heat pump will stop immediately, and all indicator lamps will go out.
• To use the TIMER to stop the heat pump after several hours	1. Set the "H" knob to the number of hours at which you wish to stop the heat pump. 2. Set the "C" knob to the TIMER OFF position.	The "E" lamp will light and after the set hours have elapsed the heat pump will stop automatically.
• To switch the heat pump to the ENERGY SAVING mode during manual cooling (or heating)	Set the "C" knob from the MANUAL to the NIGHT SETBACK position.	The "F" lamp will light, the set temperature will automatically change, and the heat pump will continue to operate in the NIGHT SETBACK mode.
• To use the TIMER to start the heat pump after several hours	1. Set the "H" knob to the number of hours at which you wish to start the heat pump. 2. Set the "C" knob to the TIMER ON position. 3. Press the "A" OPERATION ON/OFF button.	The "E" lamp will light and after the set hours have elapsed the heat pump will start to operate automatically.
• To circulate the air in the room without air conditioning (fan-only operation)	1. Set the "B" knob to FAN. 2. Press the "A" OPERATION ON/OFF button.	The heat pump will operate as a circulation fan without changing the room temperature.

The above description is intended to provide you with basic knowledge of your heat pump. For details of each function, read the relevant sections.

Downloaded from www.Manualslib.com manuals search engine

Operation

1) "Carefree" Operation

Once this mode is selected and the unit is preset by following the steps below, you can have the heat pump automatically bring the room to the desired temperature simply by pressing the OPERATION ON/OFF button.

STEP 1: Set the "B" MODE SELECTOR knob to AUTO.

STEP 2: Set the "C" OPERATION SELECTOR knob to MANUAL.

STEP 3: Set the "I" FAN SPEED at AUTO.

STEP 4: Press the "A" OPERATION ON/OFF button.
To stop the heat pump, press the OPERATION ON/OFF button again.

Sequence of Operation

Press the "A" OPERATION ON/OFF button. If the room temperature is higher than temperature you set using the "G" knob, the "J" lamp will light and after a few minutes cooling will begin. If, on the other hand, the room temperature is lower, the "K" lamp will light and heating will begin.

2) Cooling

A. Manual Cooling

The Manual mode is used for normal cooling operation.

STEP 1: Set the "B" MODE SELECTOR knob to COOL.

STEP 2: Set the "C" OPERATION SELECTOR knob to MANUAL.

STEP 3: Set the "I" FAN SPEED as desired.

STEP 4: Press the "A" OPERATION ON/OFF button.
To stop the heat pump, press the OPERATION ON/OFF button again.

NOTE

1. This appliance has a built-in time delay circuit to ensure reliable operation. If the operation button is pressed, the compressor will start running after a few minutes.
   In the event of power failure, the unit will stop. When the power is applied, the unit will re-start automatically after 3 minutes.
2. To prevent the appliance from malfunctioning, do not set the selector knob between the two indicated positions. Make sure that it clicks into position.

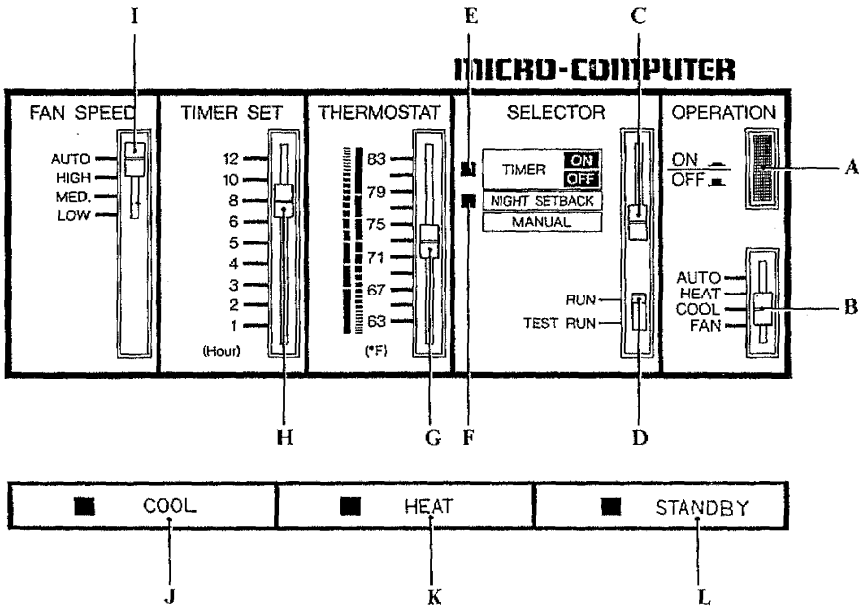

Downloaded from www.Manualslib.com manuals search engine

B. Night Setback Mode in Cooling

STEP 1: Set the "C" OPERATION SELECTOR knob to NIGHT SETBACK before turning the system on.

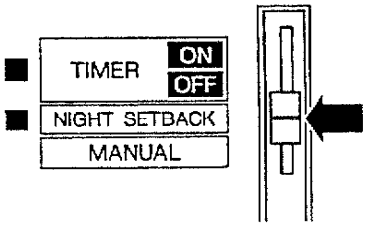

STEP2: Check that "B" mode selector knob is set at COOL position.

STEP3: Press the "A" OPERATION ON/OFF button.

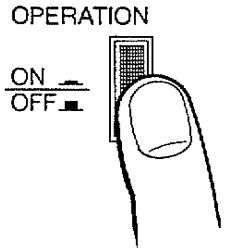

The NIGHT SETBACK and COOL lamp will light.

To cancel the Night Setback mode, move the selector to MANUAL.

■ What does the Night Setback mode mean ?

By selecting this mode then pressing the OPERATION ON/OFF button, the heat pump will perform cooling operation until the temperature in the room reaches the set value, then the thermostat will cause the unit to pause.

After about 30 minutes, the heat pump will automatically raise the set temperature 2°F. When the room temperature reaches the newly set value, the thermostat will cause the unit to pause. After about 30 minutes the temperature is again raised by 2°F as shown below. This enables you to save energy. This function is convenient for when leaving the heat pump on all night or soft cooling is needed.

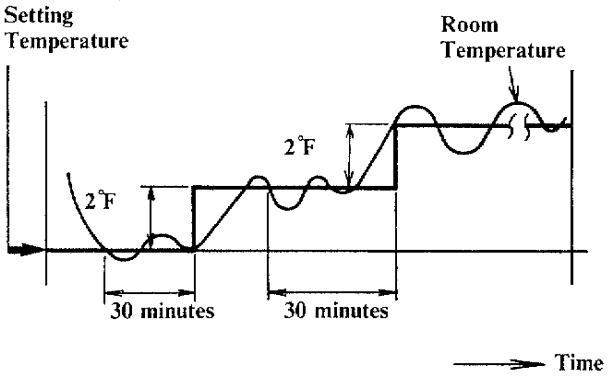

Downloaded from www.Manualslib.com manuals search engine

3) Adjusting the Fan Speed

A. Automatic

Simply set the "I" FAN SPEED selector to the "AUTO" position.

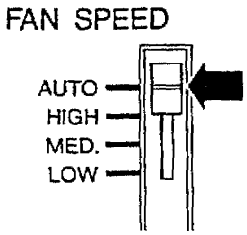

A microcomputer in the heat pump automatically controls the fan speed when the AUTO mode is selected. When the heat pump starts operating, the difference between the room temperature and the set temperature is detected by the microcomputer which then automatically switches the fan speed to the most suitable level.

B. Manual

If you want to adjust fan speed manually during cooling, just set the FAN SPEED selector as desired. [HIGH, MED., or LOW]

Cooling mode:

When difference between room temperature and set temperature is	FAN SPEED
Above 4°F	High
Between 4°F and 2°F	Medium
Below 2°F	Low

Heating mode:

When difference between room temperature and set temperature is	FAN SPEED
2°F and over	High
Below 2°F	Medium

4) Fan Only

If you want to circulate air without any temperature control, follow these steps:

STEP: 1 Set the "B" MODE SELECTOR knob to FAN.

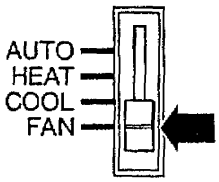

STEP: 2 Press the "A" OPERATION ON/OFF button.

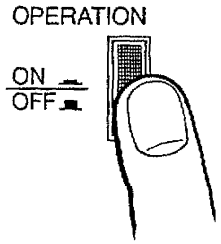

Downloaded from www.Manualslib.com manuals search engine

5) Using the Timer

A. TIMER OFF Mode

The system stops after the set hours have elapsed.

STEP 1: Set the "H" TIMER SET knob to the desired number of hours.

When the timer is set to 8, for instance, the system stops after eight hours.

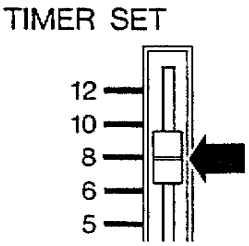

STEP 2: Set the "C" OPERATION SELECTOR knob to TIMER OFF.

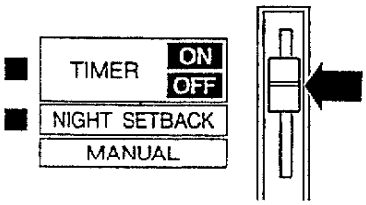

STEP 3: Press the "A" OPERATION ON/OFF button.

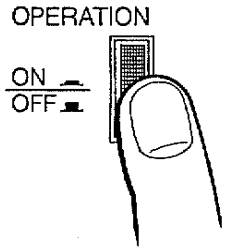

The TIMER lamp will light.

B. TIMER ON Mode

The system starts at the set time.

STEP 1: Set the "H" TIMER SET knob to the desired time.

When the timer is set to 8, for instance, the system starts after eight hours.

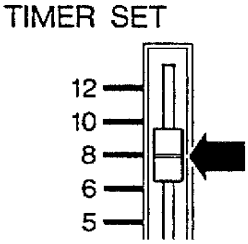

STEP 2: Set the "C" OPERATION SELECTOR knob to TIMER ON.

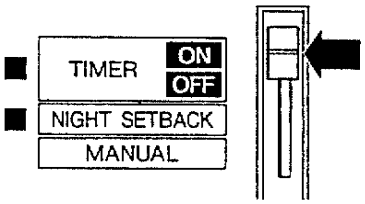

STEP 3: Press the "A" OPERATION ON/OFF button.

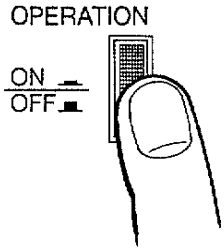

The TIMER lamp will light.

Power failure during timer operation

If power failure occurs, the time counted up to that point will become void. After the power is applied, the timer newly starts counting at the set time.

NOTE

If you set the SELECTOR to the TIMER ON position while the heat pump is operating in the NIGHT SETBACK or MANUAL mode, the heat pump will stop, then after several minutes it will re-start automatically.

Downloaded from www.Manualslib.com manuals search engine

6) Heating

A. Manual Heating

The Manual mode is used for normal heating operation.

STEP 1: Set the "B" MODE SELECTOR knob to HEAT.

STEP 2: Set the "C" OPERATION SELECTOR knob to MANUAL.

STEP 3: Set the "I" FAN SPEED as desired.

STEP 4: Press the "A" OPERATION ON/OFF button.
To stop the heat pump, press the OPERATION ON/OFF button again.

NOTE

1. This appliance has a built-in time delay circuit to ensure reliable operation. If the operation button is pressed, the compressor will start running after a few minutes.
   In the event of power failure, the unit will stop. When the power is applied, the unit will re-start automatically after 3 minutes.
2. To prevent the appliance from malfunctioning, do not set the selector knob between the two indicated positions. Make sure that it clicks into position.
3. In order to protect the appliance from an overload, the fan sometimes continues to rotate for about 30 seconds after the OPERATION ON/OFF button is pressed OFF.

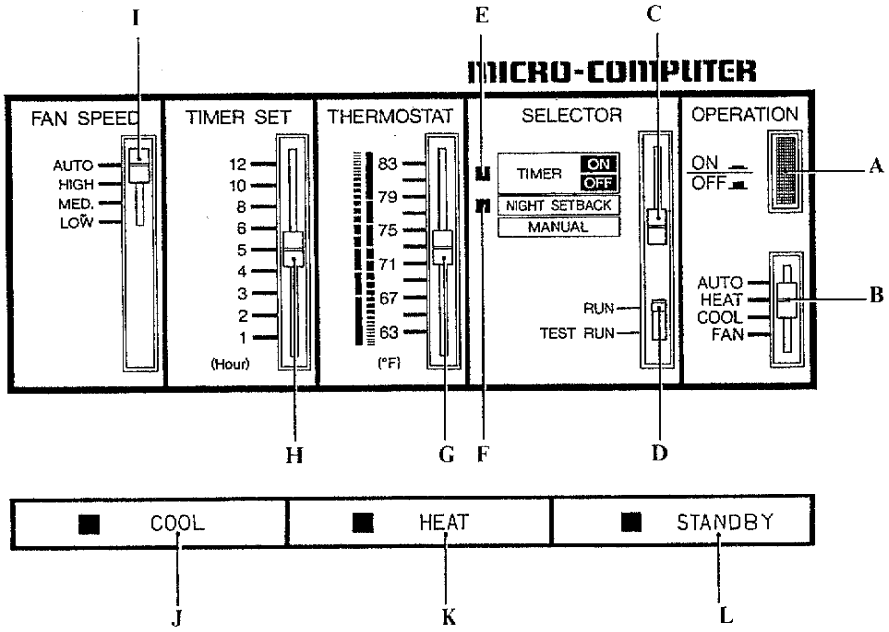

Special remarks on heating

Heating performance

- Because this heat pump heats a room by drawing in the heat of the outside air (heat pump system), the heating efficiency will fall off when the outdoor temperature is very low. If sufficient heat cannot be obtained with this heat pump, use another heating appliance in conjunction with it.

Defrosting

- When the outdoor temperature is low, frost or ice may form on the heat exchanger coil, reducing the heating performance. When this happens, a microcomputer defrosting system operates. At the same time, the fan on the indoor unit stops and the STANDBY LAMP remains lit until defrosting is completed. Heating operation restarts after several minutes. (This interval will vary slightly depending upon the outdoor temperature and the way in which frost forms).

STANDBY LAMP

- For several minutes after the start of heating operation, the indoor fan will not start running until the indoor heat exchanger coil has warmed up sufficiently. This is because the COLD DRAFT PREVENTION SYSTEM is operating. During this period, the STANDBY LAMP remains lit.

- The STANDBY lamp also remains lit during defrosting or when the compressor has been turned off by the thermostat when the system is in the heating mode.

- Upon completion of defrosting and when the compressor is turned on again, for heating operation, the STANDBY LAMP will go off automatically.

Downloaded from www.Manualslib.com manuals search engine

B. Night Setback mode in heating

STEP 1: Set the "C" OPERATION SELECTOR knob to NIGHT SETBACK before turning the system on.

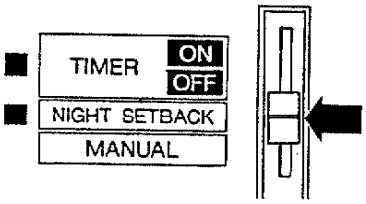

STEP2: Check that "B" mode selector knob is set at HEAT position.

STEP3: Press the "A" OPERATION ON/OFF button.

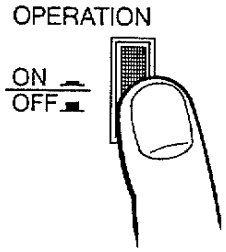

The NIGHT SETBACK and HEAT lamp will light.

To cancel the Night Setback mode, move the selector to MANUAL.

■ **What does the Night Setback mode mean ?**

By selecting this mode then pressing the OPERATION ON/OFF button, the heat pump will perform heating operation until the temperature in the room reaches the set value, then the thermostat will cause the unit to pause.

After about 30 minutes, the heat pump will automatically lower the set temperature 4°F. When the room temperature reaches the newly set value, the thermostat will cause the unit to pause. After about 30 minutes, the temperature is again lowered by 4°F as shown below. This enables you to save energy. This function is convenient for when leaving the heat pump on all night or mild heating is needed.

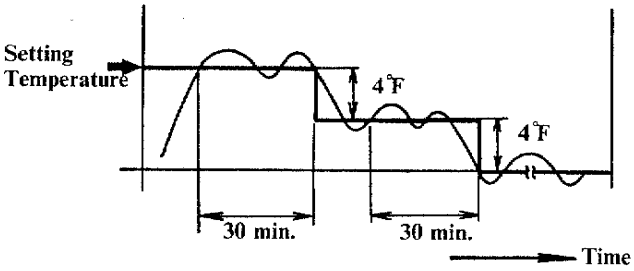

7) Adjusting the Air Flow Direction

A. Horizontal

The horizontal air flow can be adjusted by moving the vertical vane to the left or right.

B. Vertical

Hold both ends of the flap and move the flap up and down to adjust the vertical air flow.

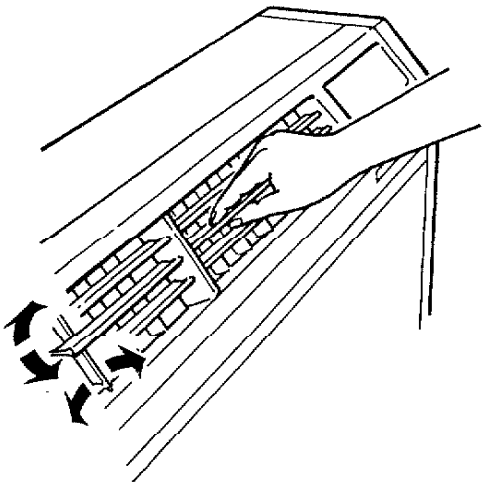

Downloaded from www.Manualslib.com manuals search engine

Care and Cleaning

For safety's sake, be sure to turn the heat pump off and also disconnect it from the power mains before cleaning it.

Casing and Grille (Indoor Unit)

Clean the casing and grille of the indoor unit with a vacuum cleaner brush, or wipe them with a clean soft cloth.

If these parts are stained, use a clean cloth moistened with a mild liquid detergent.

When cleaning the grille, be careful so as not to force the vanes out of place.

CAUTION

1. Do not pour water on the unit to clean it. This will damage the internal components and cause an electric shock hazard.
2. Never use solvents, or harsh chemicals. Do not wipe the plastic casing using very hot water.

Outdoor Unit

CAUTION

1. Certain metal edges and the condenser fins are sharp and may cause injury if handled improperly; special care should be taken when you clean these parts.
2. Periodically check the outdoor unit to see if the air outlet or air intake are clogged with dirt or soot.
3. The internal coil and other components of the outdoor unit must also be cleaned periodically. Consult your dealer or service shop.

Air Filter

The air filter behind the air intake grille should be checked and cleaned at least once every two weeks.

How to remove the filter

1. Grasp air filter bt the tab at the air intake grill, and pull it toward you.

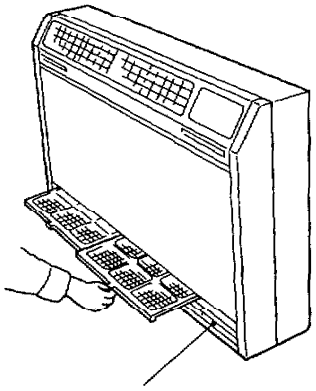

Air intake grille

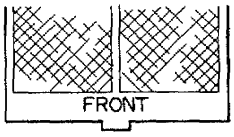

Air filter

Use a vacuum cleaner to remove light dust. If there is sticky dust on the filter, wash the filter in lukewarm, soapy water, rinse it in clean water, and dry it.

When replacing the filter, check that the FRONT mark is facing you.

CAUTION

DO NOT operate the heat pump without the air filter. This can damage the unit.

Downloaded from www.Manualslib.com manuals search engine

7. FUNCTION

1) Temperature Control

■ Cooling

- Temperature control is obtained by cycling the compressor ON and OFF under control of the room temperature sensor in the remote control unit.

- The compressor turn to OFF below the setting temperature (Thermo OFF), and turn to ON above 1°F from setting temperature (Thermo ON).

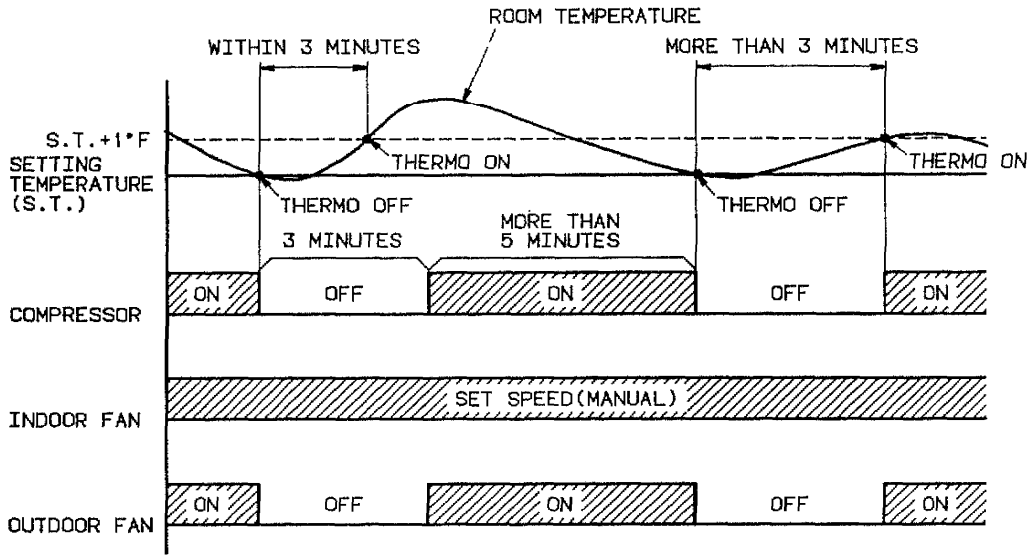

Fig. 1

- In order to keep the compressor from stalling out when trying to start against the hight side refrigerant pressure, the control circuit has a built-in automatic time delay to allow the internal pressure to equalize. The control circuit will not try to start the compressor until it has been off for three (3) minutes.

- The compressor keep to turn forced for five (5) minutes, but the operation button is set to OFF, the compressor stop to turn.

- The compressor is not controlled by thermostat while the compressor run within five (5) minutes, or stop to run within three (3) minutes.

Downloaded from www.Manualslib.com manuals search engine

■ Heating

- Temperature control is obtained by cycling the compressor ON and OFF under control of the room temperature sensor in the remote control unit.

- The compresor turn to OFF above the setting temperature (Thermo OFF), and turn to ON below 1°F from the setting temperature (Thermo ON).

  The compressor start to run at Thermo ON and heating operation start, then if the room temperature is down below 3.6°F from the setting temperature, the electric heater will be ON. (When the operation button is set to ON to start heating operation, the electric heater will be ON following the compressor operation.)

- The electric heater is OFF when the operation is Thermo OFF and the compressor stop.

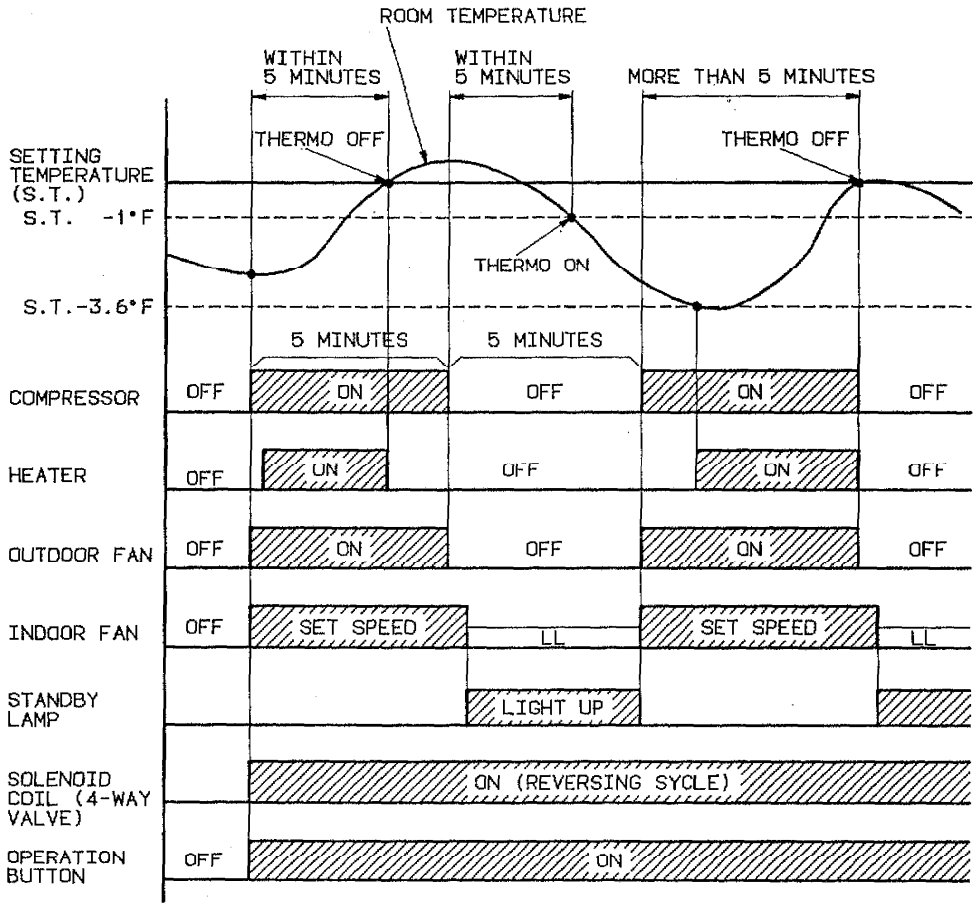

Fig. 2

- In order to keep the compressor from stalling out when trying to start against the hight side refrigerant pressure, the control circuit has a built-in automatic time delay to allow the internal pressure to equalize. The control circuit will not try to start the compressor until it has been off for at least five (5) minutes.

- The compressor keep to turn forced for five (5) minutes, but the operation button is set to OFF, the compressor stop to turn.

- The compressor is not controlled by thermostat while the compressor run within five (5) minutes or stop to run.

Downloaded from www.Manualslib.com manuals search engine

;) Night Setback Modes Timing Chart

▌Cooling

Refer to page 28.

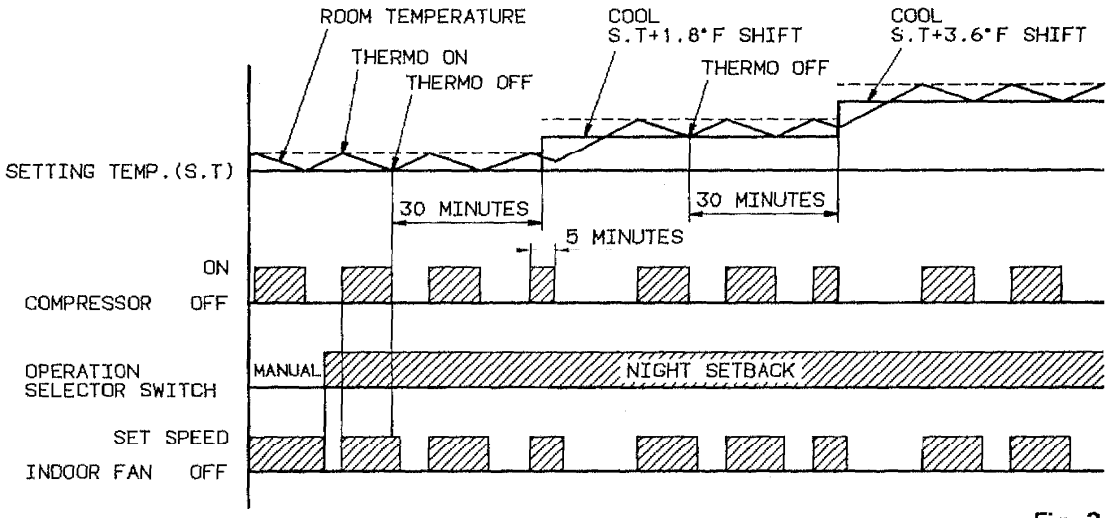

Fig. 3

■ Heating

Refer to page 32.

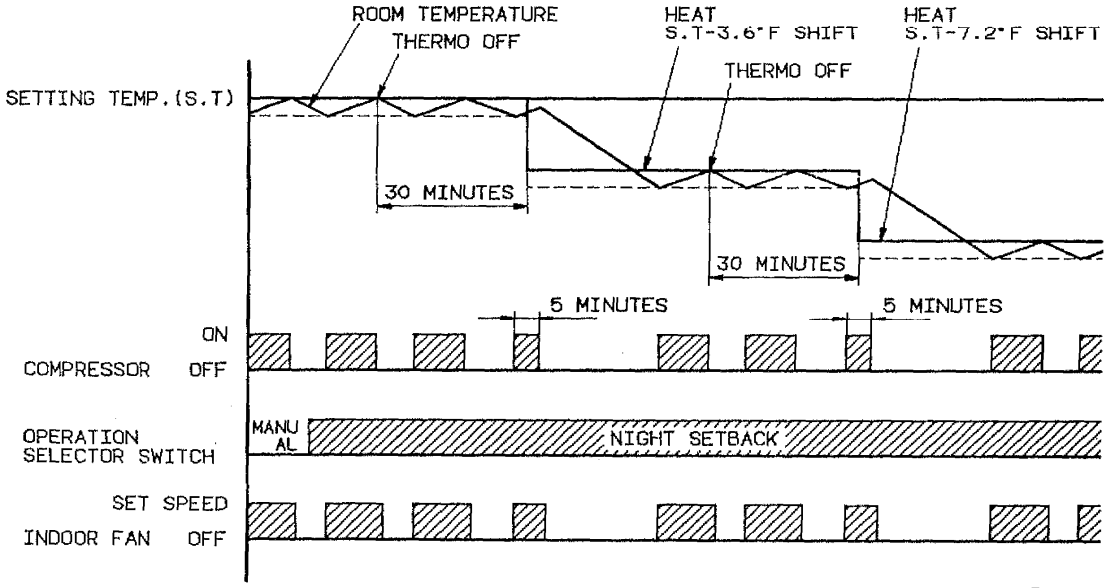

Fig. 4

Downloaded from www.Manualslib.com manuals search engine

3) Auto Modes

■ Manual mode

- Timing chart

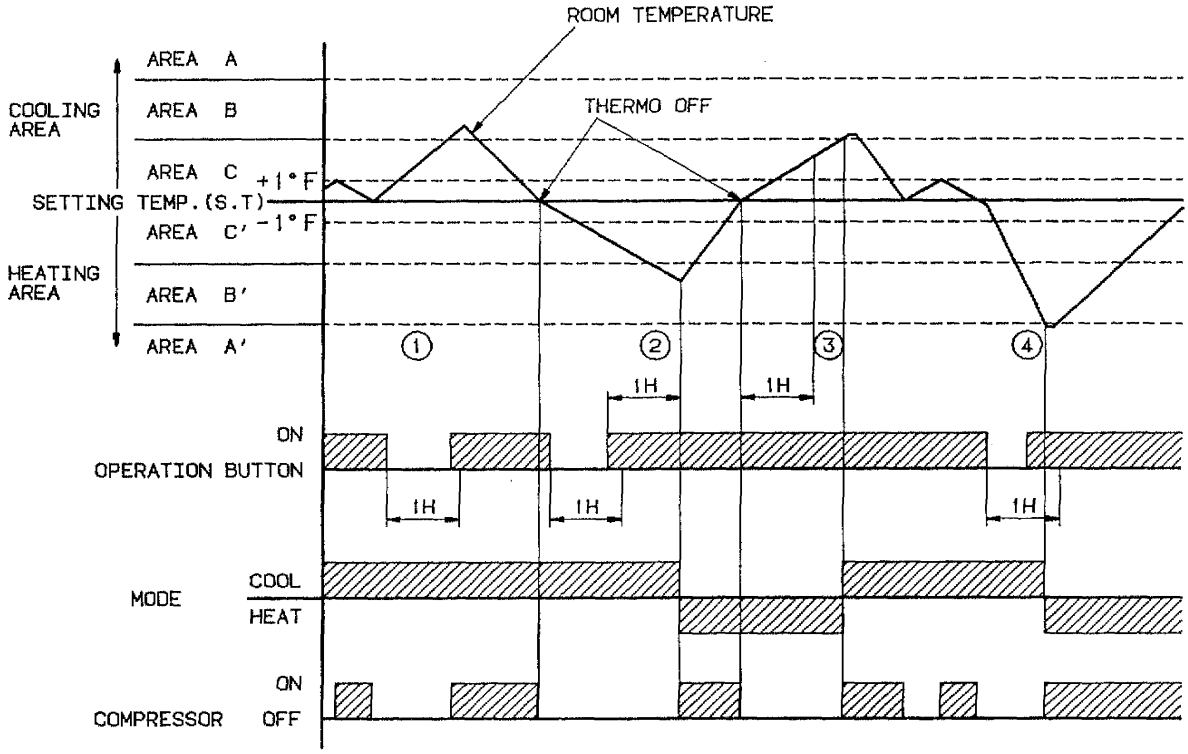

Fig. 5

- The MODE (Cool or Heat) is selected automatically by setting temperature and room temperature.
- In case of room temperature changes in the AREA C and C', the MODE will not change.
- When the room temperature changes from the COOLING AREA to the AREA B' of the HEATING AREA (from the HEATING AREA to the AREA B of the COOLING AREA), the MODE will change by timer. Refer to ① → ②, ② → ③
- When the room temperature changes from the COOLING AREA to the AREA A' of the HEATING AREA (from the HEATING AREA to the AREA A of the COOLING AREA), the MODE will change soon. Refer to ③ → ④

Downloaded from www.Manualslib.com manuals search engine

Night Setback mode timing chart

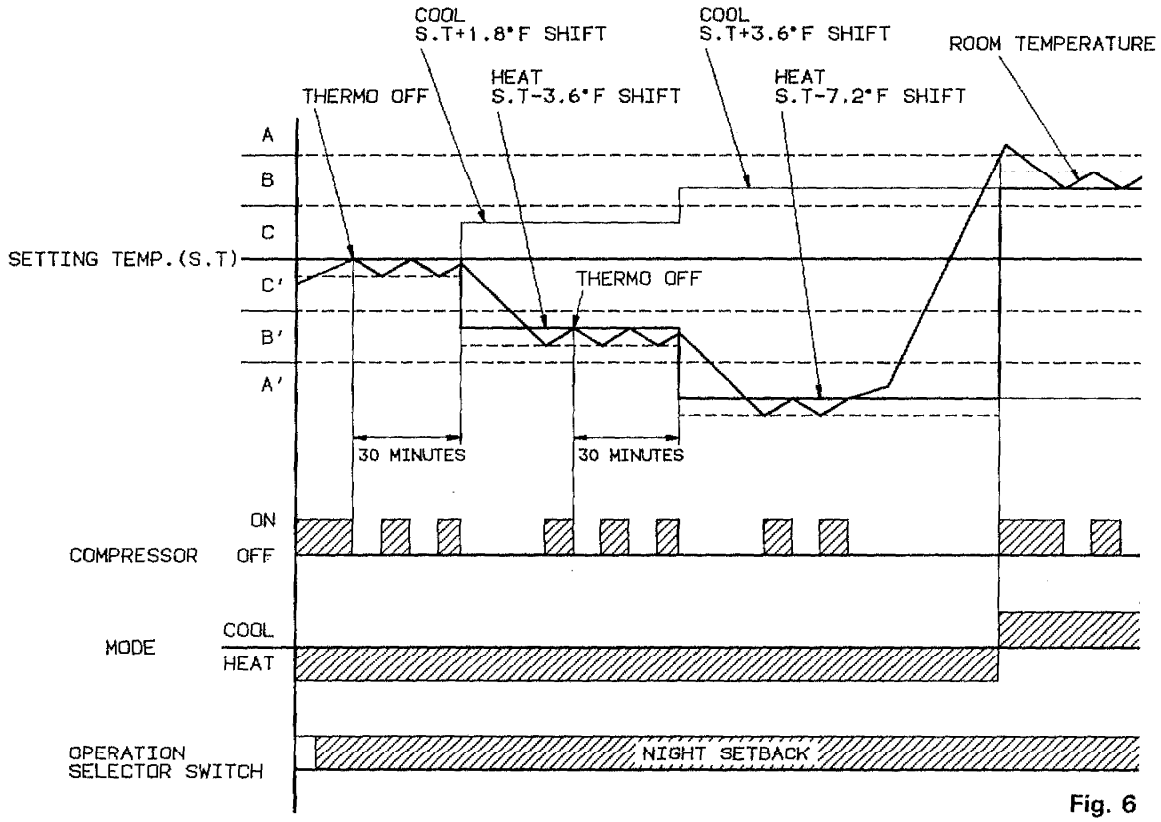

Fig. 6

Downloaded from www.Manualslib.com manuals search engine

4) Freeze Prevention (Cooling)

- If the indoor coil temperature falls below 30°F when the compressor has been turning for 10 minutes or more,the controller signals to stop turning to the compressor and outdoor fan. The compressor and outdoor fan motor will start to turn after 6 minutes.

- The compressor and outdoor fan motor will start after 6 minutes.

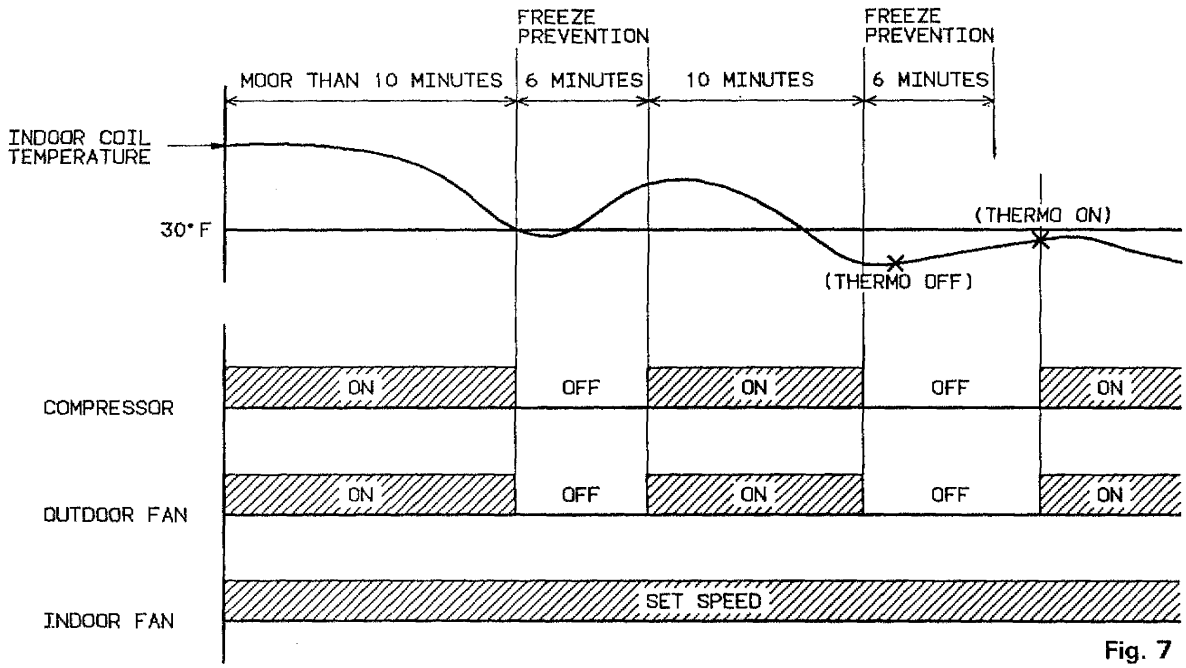

Fig. 7

5) Outdoor Fan Speed Control (only 18FH12X)

■ Cooling

In low temperature areas, the outdoor fan is set automatically to LOW to prevent freezing.
When the outdoor air temperature falls below 74°F the outdoor fan is set to LOW.
When the outdoor air temperature rises to 81°F the outdoor fan is set to HIGH.

■ Hating

In high temperature area, the outdoor fan is set automatically to LOW to prevent overload.
When the outdoor air temperature rises to 64°F, the outdoor fan is set to LOW.
When the outdoor air temperature falls below 59°F, the outdoor fan is set to HIGH.

Downloaded from www.Manualslib.com manuals search engine

Overload Prevention (Heating)

'hen the indoor coil temperature rises above T3, if the set speed of the indoor fan is LOW, the fan ›eed changes to MED. When the temperature reaches to T4, the outdoor fan stop to turn.
'hen the temperature falls below T2, the outdoor fan turn to ON.
'hen the temperature falls below T1, the indoor fan speed return to LOW from MED.

ıus the system is protected from the overload.

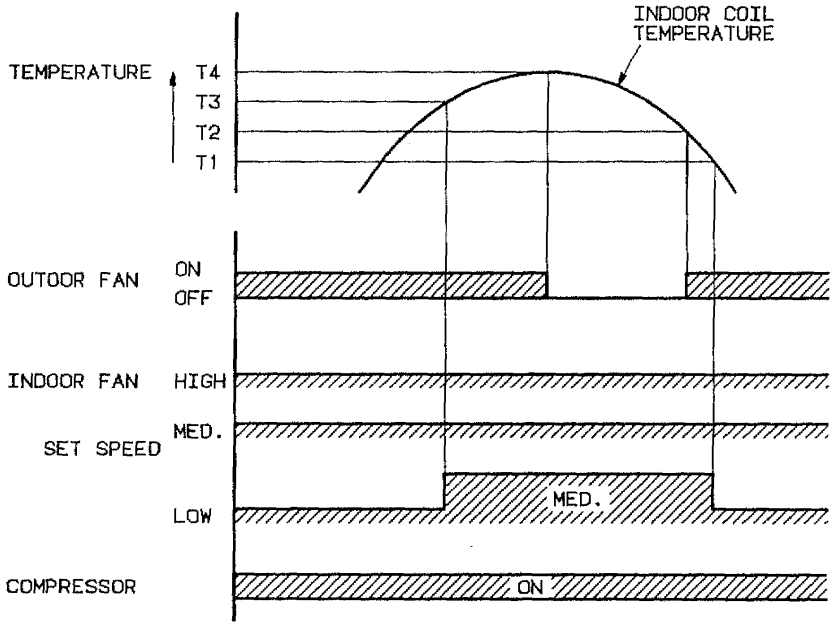

Fig. 8

Model No.	Indoor coil temperature °F			
	T1	T2	T3	T4
12FH11X 12FH12X	104	113	122	126
18FH12X	106	115	124	127

Downloaded from www.Manualslib.com manuals search engine

7) Cold Draft Prevention (Heating)

When the standby lamp lights up, the indoor fan stop, and blowout of cool air is prevented. Refer to page 31, 35 and 43.

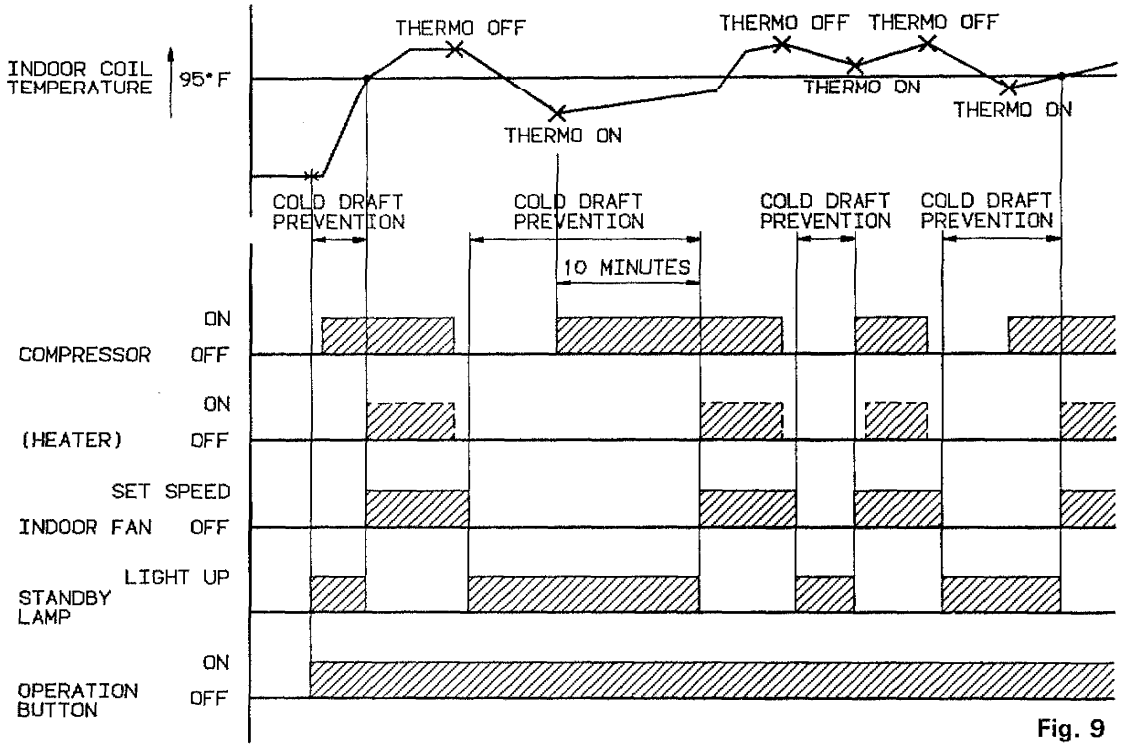

Fig. 9

Downloaded from www.Manualslib.com manuals search engine

:) Defrosting Mode (Heating)

When the capacity of unit has been decreased due to frost sticking to the outdoor heat exchanger during heating, the temperature drop gradient is detected by the microcomputer controlled temperature sensing system, and defrosting operation is started. At this time, the indoor and outdoor fan motors will stop, only the compressor is operated, and the system is automatically changed to cooling operation mode.

Flow of Defrosting

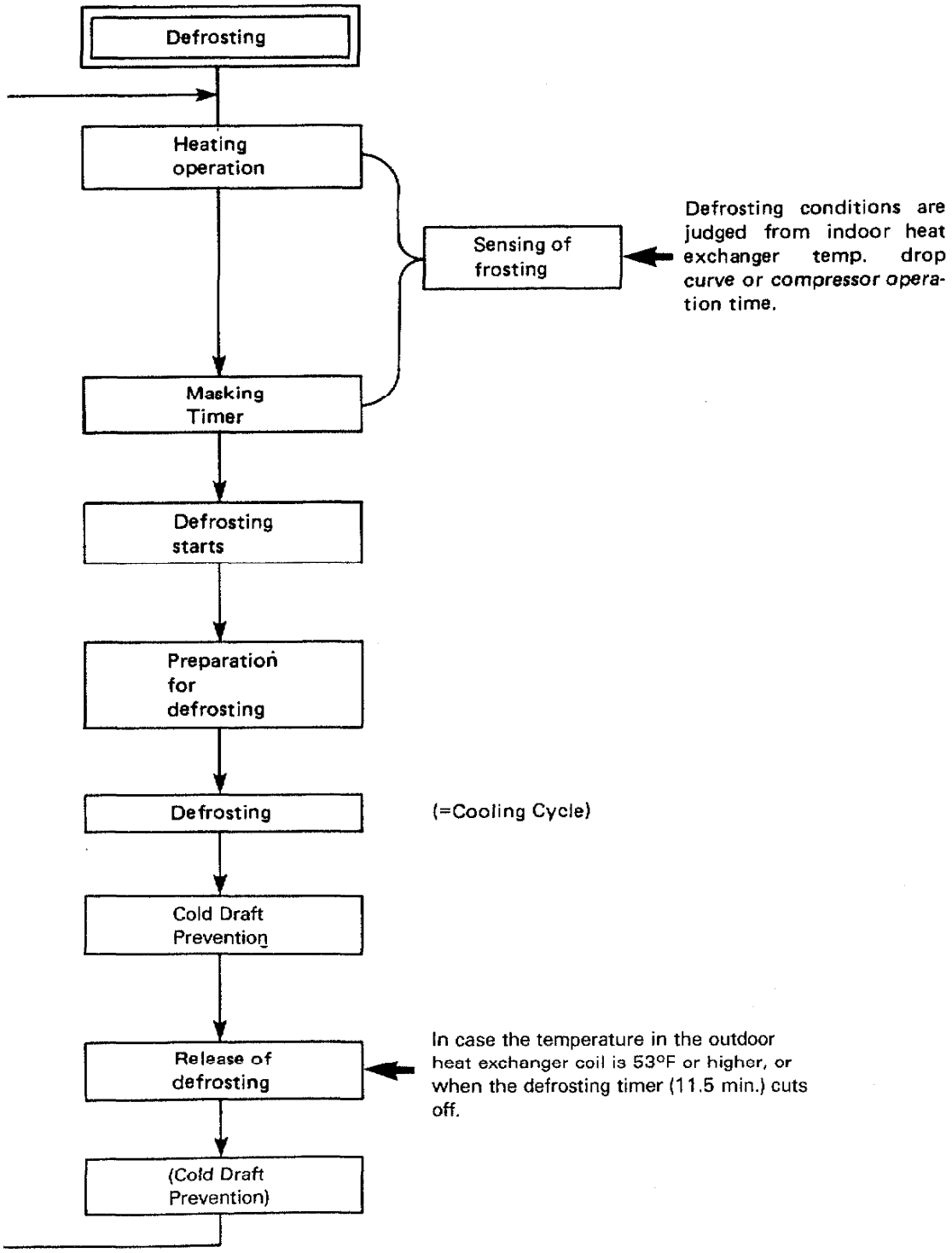

Downloaded from www.Manualslib.com manuals search engine

- Timing chart of Defrosting.

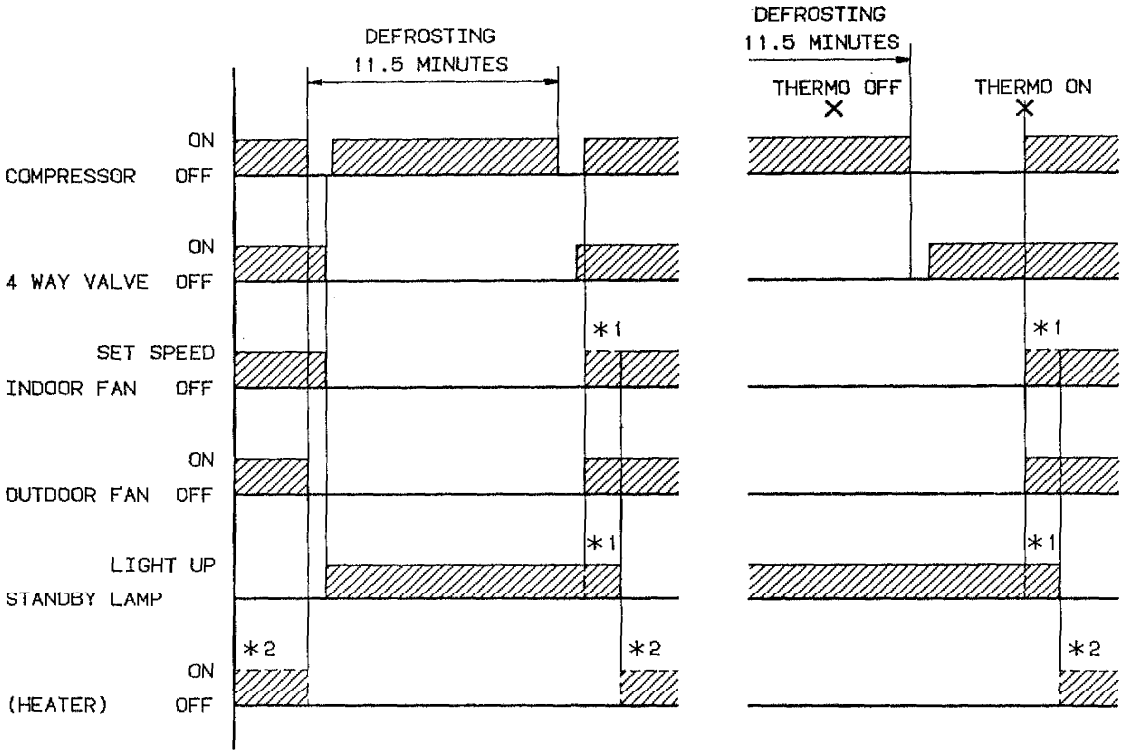

Fig. 10

Note: *1. In case of Cold Draft Prevention.
*2. There is the case of Heater OFF.

Downloaded from www.Manualslib.com manuals search engine

INSTALLATION INSTRUCTIONS

1) Installation Site Selection

Indoor Unit

AVOID:
- area where leakage of flammable gas may be expected.
- place where a large amount of oil mist exists.
- direct sunlight.
- nearby heat source that may affect performance of the unit.

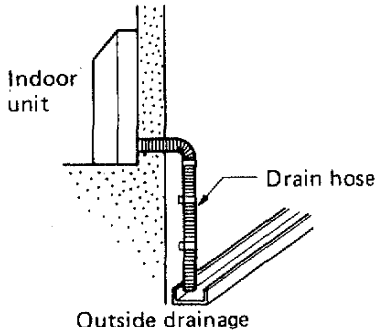

Fig. 1

- select an appropriate position from which every corner of the room can be uniformly cooled.
- select a location that will hold the weight of the unit.
- select a location where piping and drain pipe have shortest run to the outside. Fig. 1
- allow room for operation and maintenance as well as unrestricted air flow around the unit.
- install unit within the maximum height (H) up or down of outdoor unit and within a total piping length (L) from outdoor unit stipulated in Table 1. Fig. 2.

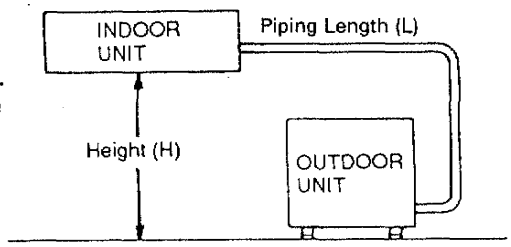

Fig. 2

Model	Max. allowable piping length at shipment (ft)	Limit of piping length (L) (ft)	Limit of elevation difference (H) (ft)	Required amount of additional refrigerant* (oz/ft)	Refrigerant amount charged at shipment (lb)
12FH11X	33	33	23	—	3.0
12FH12X	33	33	23	—	2.96
18FH12X	33	50	23	0.22	3.91

* No additional charge of compressor oil is required.

Table 1

NOTE

Maximum allowable piping length at shipment for model 18FH12X is 33ft (10m). However, if the piping length will exceed more than 33ft (10m), additional refrigerant charge is necessary. (Refer to table 1)

Downloaded from www.Manualslib.com manuals search engine

Outdoor Unit

AVOID:
- heat sources, exhaust fans, etc., Fig. 3
- damp, humid or uneven locations.

DO:
- choose a place as cool as possible.
- choose a place that is well ventilated and outside air temperature does not exceed 115°F constantly.
- allow enough room around unit for air intake/exhaust and possible maintenance. Fig. 3
- install the unit on the accessory steel blocks (two).
- (These accessory parts are provided for protecting the unit from possible water and/ or icing problems and assure the longer service life.)Fig. 4
- use lug bolts or equal to bolt down the unit, reducing vibration and noise.

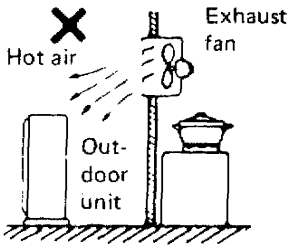

Fig. 3

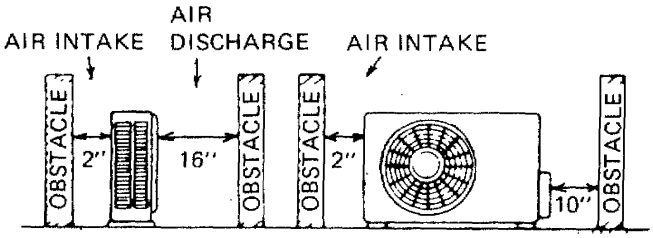

Fig. 4

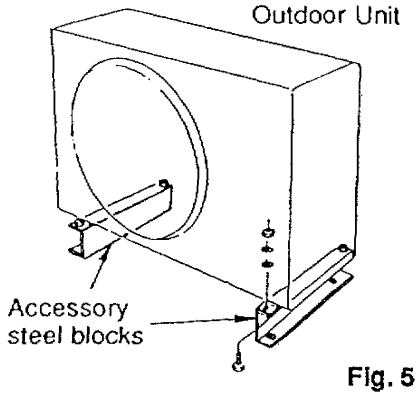

Fig. 5

Downloaded from www.Manualslib.com manuals search engine

Connecting Pipes between Indoor and Outdoor Units

Connect the indoor side refrigerant piping extended from the wall with the outdoor side piping tightly.

Flare nut on large dia. pipe should be torqued to 430 ~ 470 lb · in. Flare nut on small dia. pipe should be torqued to 130 ~ 170 lb · in. Fig. 5

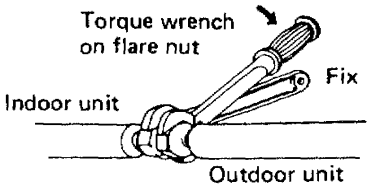

Fig. 5

After performing a leak test on the connecting part insulate and finish with a vinyl masking tape over it. Fig. 6

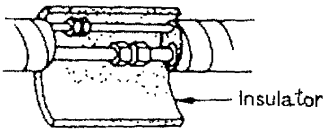

Fig. 6

Insulation of Refrigerant Piping

Because the capillary tubing is installed in the outdoor unit, both wide and narrow pipes of this air conditioner become cold. Therefore, to prevent heat loss and wet floors due to dripping of chilled sweat, both pipes must be well insulated with proper insulation material. Thickness of insulation material should be min. 5/16". Fig. 7

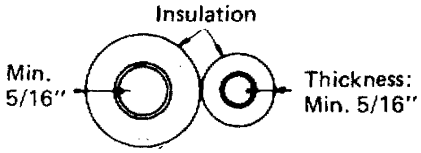

Fig. 7

Wiring Instructions

WIRING SYSTEM DIAGRAM

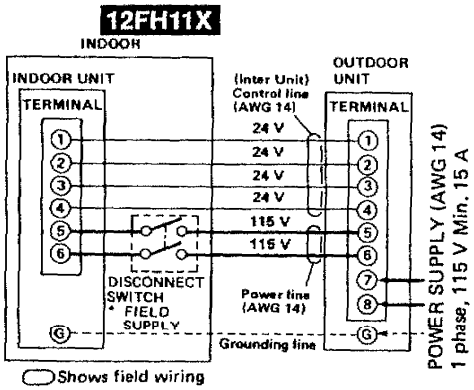

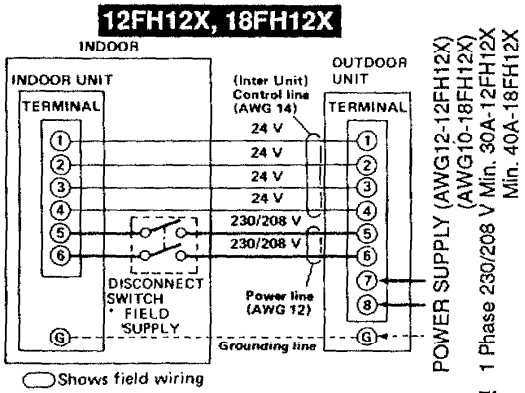

Fig. 8

Downloaded from www.Manualslib.com manuals search engine

5) Air Purging

Air does not function as a refrigerant, because it cannot be liquefied in the condenser. Air and moisture remaining in the refrigerant system have undesirable effects mentioned below. Therefore, they must be purged completely.

- The pressure on the narrow pipe rises.
- The operating current rises.
- Cooling and heating efficiency drops.
- Water contained in the air may freeze and block the capillary tubing.
- Water may lead to corrosion of parts in the refrigerant circuit.

Piping Diagram for Air Purging

Diagram shown is for **12FH11X**.

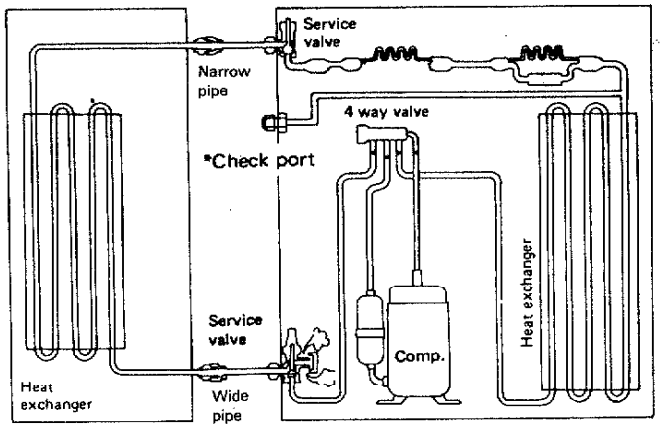

Fig. 9

* Check port is provided for measuring system pressure with a pressure gauge or the like during service.

Quick Air Purge System

New quick air purge system represents purging the air in the indoor unit and connection pipes with the aid of refrigerant gas pre-charged in the outdoor unit.

By this system, air purging has become much simpler and installation time has become shorter than conventional methods.

* Interval required for air purging changes depending on the size of unit:

Model	Group	Required Interval
12FH12X 12FH11X	A. Quick purge 15"	15 seconds
18FH12X	B. Quick purge 30"	30 seconds

NOTE Outdoor unit is pre-charged at the factory.
Don't open valves until piping is hooked up and you are ready to proceed with purging procedure.

Air Purging Procedure

a) Remove the valve caps from the service valves on the narrow and wide pipes.
b) Slacken off the flare nut at the charging port one full turn.
c) Open the service valve on the narrow pipe by 90 degrees (1/4 turn).
(During this operation, air will be discharged from the charging port of the service valve on the wide pipe).
d) Fifteen (15) seconds or thirty (30) seconds after opening the spindle, tighten up the flare nut of the charging port.
e) Shut the spindle of the service valve on the narrow pipe. Fig. 10
f) Leak test the joints with liquid soap. Fig. 11
g) Fully open the spindles of the service valves on the wide pipe and the narrow pipe.
h) Next, install a valve cap in which copper gasket has been inserted. Fig. 12
i) Here, all air purge procedure has completed and the unit is ready for trial operation.

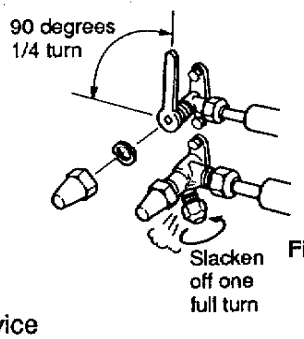

Fig. 10

• Use service valve wrench (not supplied).

After required internal, firmly tighten up with a torque wrench

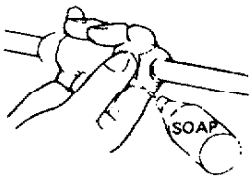

Fig. 11

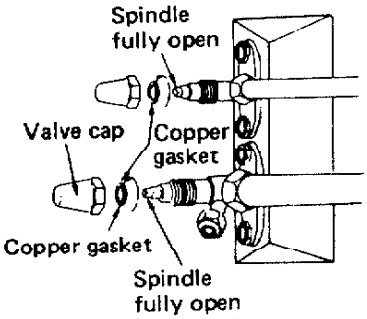

Fig. 12

Downloaded from www.Manualslib.com manuals search engine

) TEST RUN

:heck that all piping and wiring have been com-
leted correctly. Check again that wide and nar-
ɔw pipes service valves are fully opened. Turn
n power and run the unit.

■ SERVICE VALVE CONSTRUCTION

- **Valve Position -a-**
  The valve spindles of both wide and narrow pipes are turned all the way in. The unit is shipped from the factory in this position. (Fig. 13-a)
- **Valve Position -b-**
  The valve spindles of both wide and narrow pipes are turned all the way out ("BACK SEAT" position). This is the normal operating position. (Fig. 13-b)
- **Valve Position -c-**
  With the narrow pipe valve kept at BACK SEAT only the wide pipe valve spindle is turned half-waydown position. This position is used for pressure measurement and gas charging. (Fig. 13-c)
- **Valve Position -d-**
  Like position -a-, but with the flare nut of wide pipe slack. This position is used for air purging. (Fig. 13-d)

CAUTION

Be sure to use the valve tool or ratchet wrench when opening or closing the shut-off valve spindle.

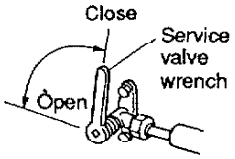

Fig. 14

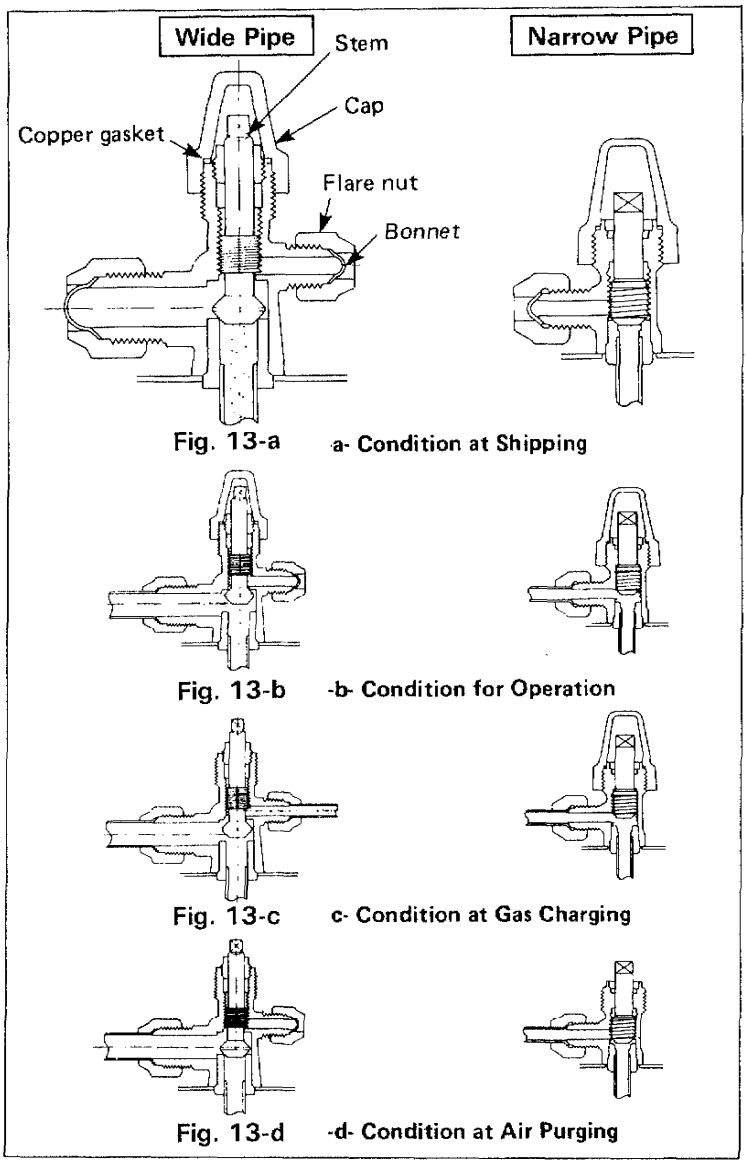

Fig. 13-a -a- Condition at Shipping

Fig. 13-b -b- Condition for Operation

Fig. 13-c c- Condition at Gas Charging

Fig. 13-d -d- Condition at Air Purging

■ PUMP DOWN

ᵖump down means collecting all refrigerant in the
;ystem back into the outdoor unit without losing
'efrigerant gas. Pump down is used when unit is
noved or for servicing the refrigerant circuit.

Pump Down Procedure (Be sure to carry out Pump Down in cooling operation)

1) Close valve on wide pipe halfway (2 turns).
2) Close valve on narrow pipe all the way (4 turns).
3) Turn unit on (cooling) for approximately 3 minutes then shut off.
4) Close valve on wide pipe all the way (2 additionnal turns).
5) Disconnect pipes slowly allowing pressure to equalize inside and out.
6) When piping is disconnected provide dust covers for both valves and pipes until unit is reconnected.

CAUTION WHEN THE UNIT IS REINSTALLED

- After reinstalling the unit, flush in the piping with the gas contained in the outdoor unit. Besure to charge refrigerant as mentioned below from wide pipe service valve at position - c - during cooling operation.
  FH1211X, FH1212X: 1.4 oz(40 g)
  FH1812X: 2.8 oz (80g)
- No additional charging of refrigerant is necessary when vacuum evacuation was taken place for servicing..

Downloaded from www.Manualslib.com manuals search engine

9. REFRIGERANT FLOW DIAGRAM

COOLING CYCLE

MODELS: 12FH11X/12FH12X

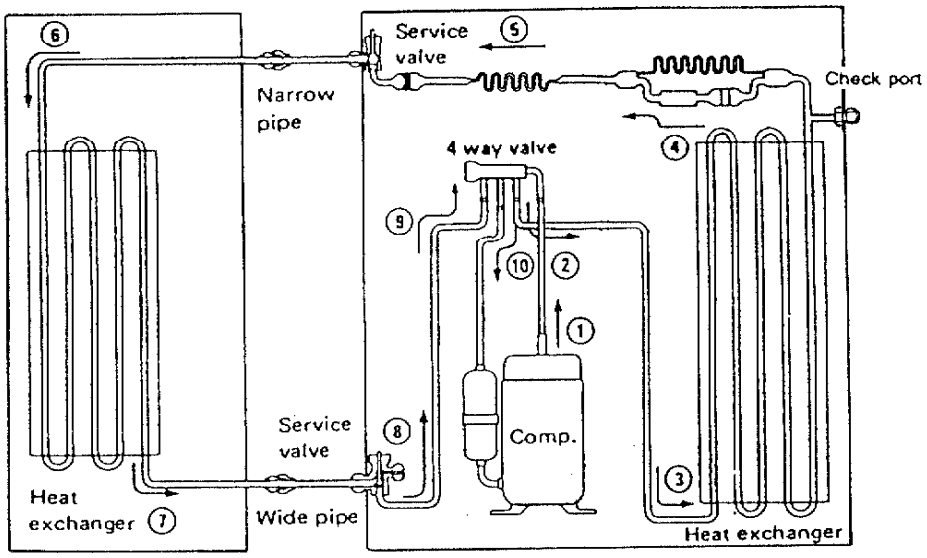

(INDOOR UNIT) (OUTDOOR UNIT)

HEATING CYCLE

MODELS: 12FH11X/12FH12X

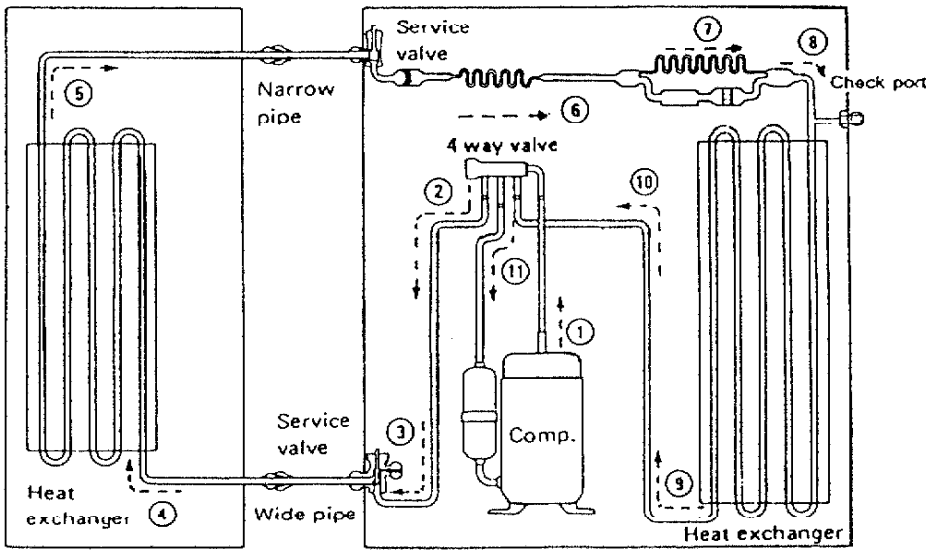

(INDOOR UNIT) (OUTDOOR UNIT)

Downloaded from www.Manualslib.com manuals search engine

EFRIGERANT FLOW DIAGRAM

COOLING CYCLE

MODEL: 18FH12X

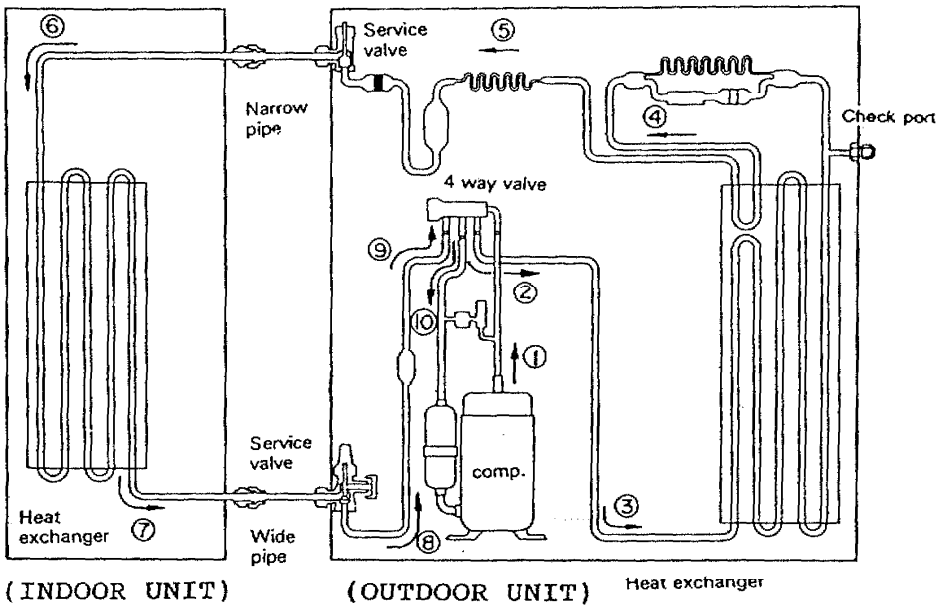

HEATING CYCLE

MODEL: 18FH12X

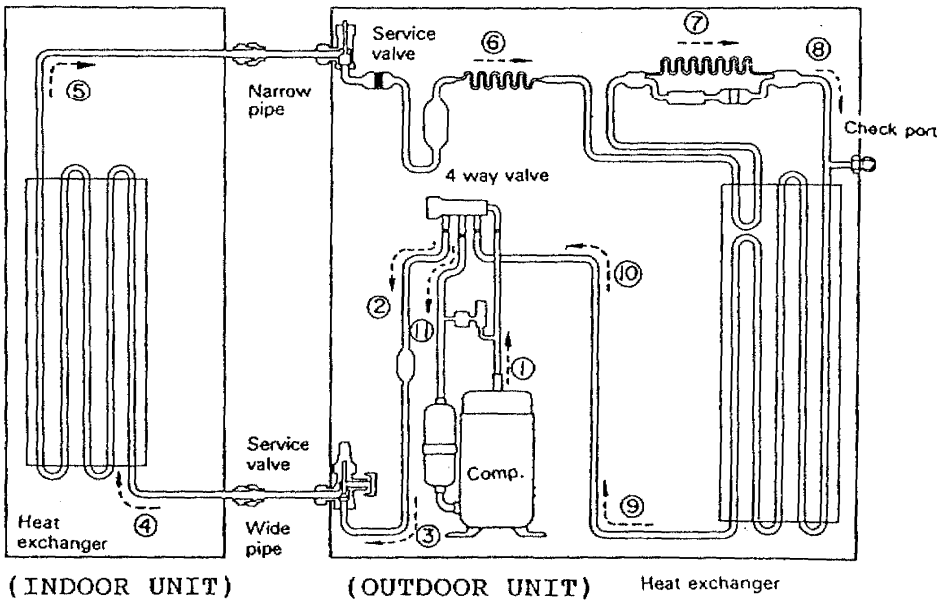

Downloaded from www.Manualslib.com manuals search engine

10. ELECTRICAL DATA

- Schematic Diagram

12FH11X

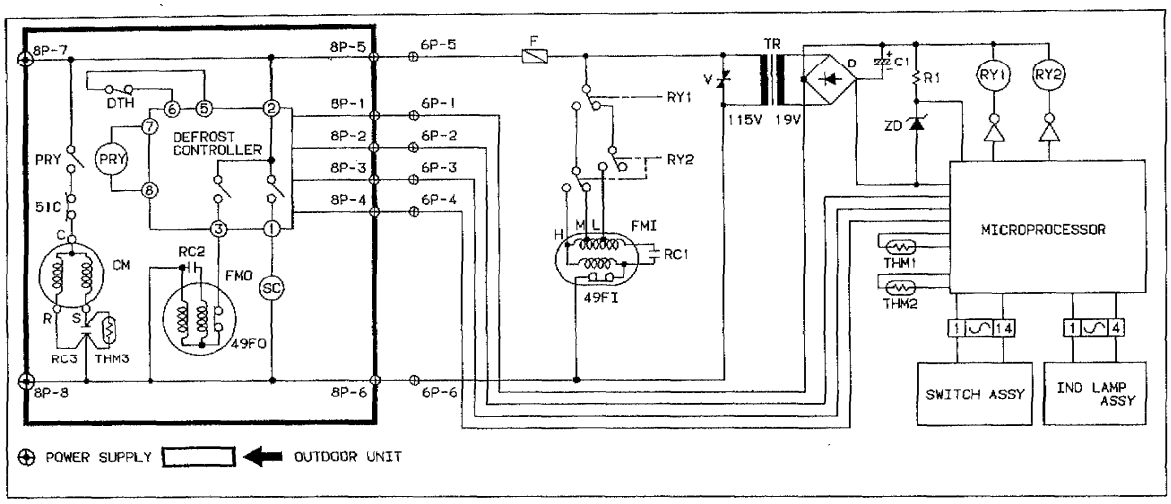

SYMBOL	PARTS NAME	SYMBOL	PARTS NAME
CM	COMPRESSOR MOTOR	TR	TRANSFORMER
FMI	INOOOR FAN MOTOR	ZD	ZENER DIODE
FMO	OUTDOOR FAN MOTOR	C1	CAPACITOR
51C	CM OVERLOAD RELAY	R1	RESISTOR
49FI	FMI INTERNAL OVERLOAD PROTECTOR	V	VARISTOR
49FO	FMO INTERNAL OVERLOAD PROTECTOR	F	FUSE
		D	DIODE
PRY	POWER RELAY	THM1,THM2	THERMISTOR
RY1,RY2	AUXILIARY RELAY	THM3	THERMISTOR (P.T.C.)
SC	SOLENOID COIL (4-WAY VALVE)		
DTH	DEFROST THERMOSTAT		
RC1,RC2,RC3	CAPACITOR		

Downloaded from www.Manualslib.com manuals search engine

- Schematic Diagram

12FH12X

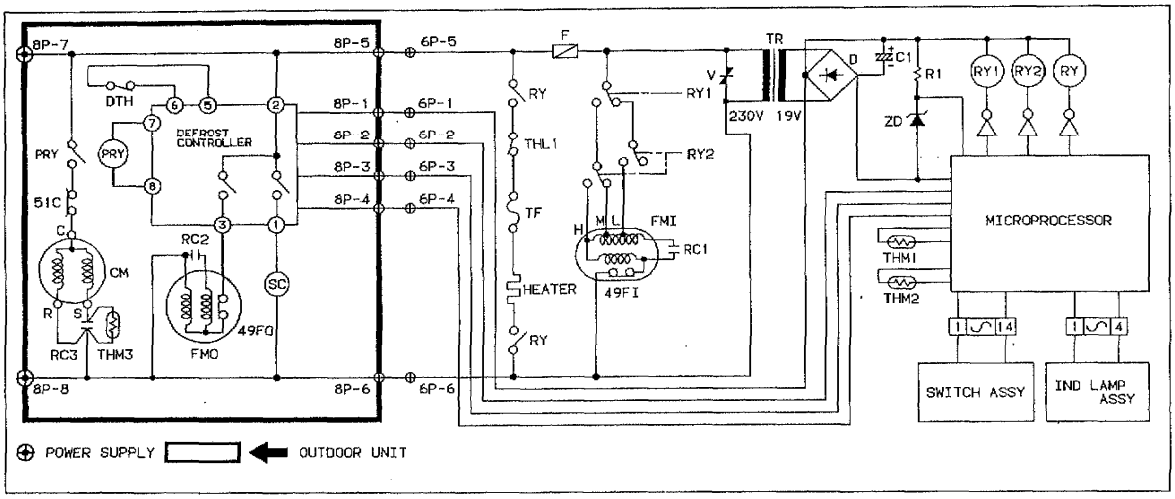

SYMBOL	PARTS NAME	SYMBOL	PARTS NAME
CM	COMPRESSOR MOTOR	TR	TRANSFORMER
FMI	INDOOR FAN MOTOR	ZD	ZENER DIODE
FMO	OUTDOOR FAN MOTOR	C1	CAPACITOR
51C	CM OVERLOAD RELAY	R1	RESISTOR
49FI	FMI INTERNAL OVERLOAD PROTECTOR	V	VARISTOR
49FO	FMO INTERNAL OVERLOAD PROTECTOR	F	FUSE
PRY	POWER RELAY	D	DIODE
RY	HEATER RELAY	THM1,THM2	THERMISTOR
RY1,RY2	AUXILIARY RELAY	THM3	THERMISTOR (P.T.C.)
SC	SOLENOID COIL (4-WAY VALVE)	TF	THERMO FUSE
DTH	DEFROST THERMOSTAT	THL1	THERMOSTAT (THERMAL LIMITTER)
RC1,RC2,RC3	CAPACITOR		

Downloaded from www.Manualslib.com manuals search engine

- Schematic Diagram

18FH12X

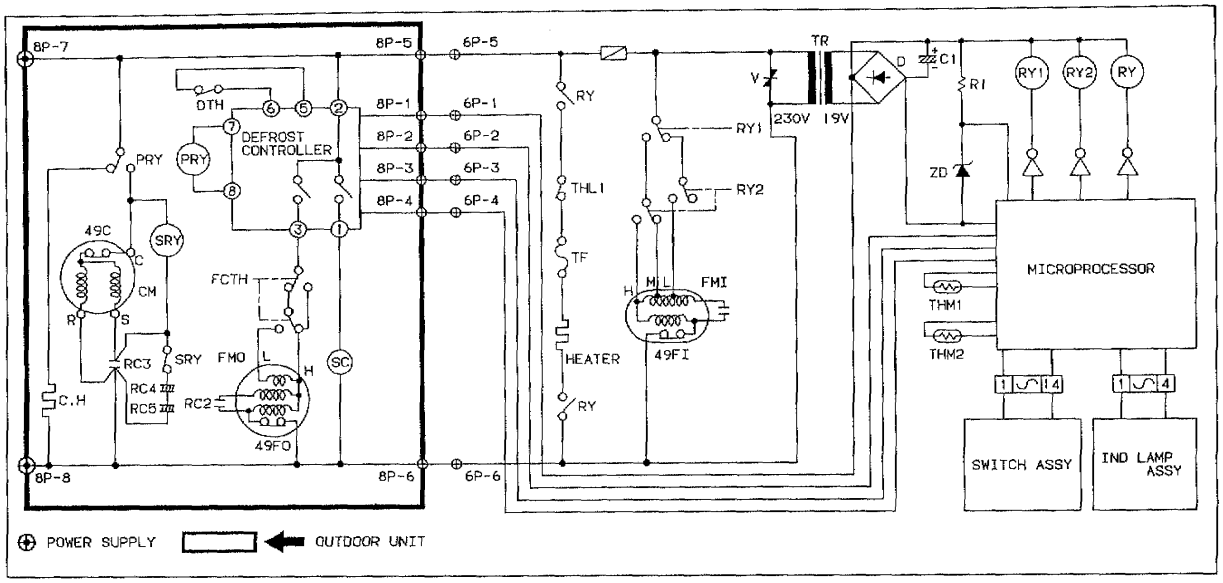

SYMBOL	PARTS NAME	SYMBOL	PARTS NAME
CM	COMPRESSOR MOTOR	RY1,RY2	AUXILIARY RELAY
FMI	INDOOR FAN MOTOR	TR	TRANSFORMER
FMO	OUTDOOR FAN MOTOR	ZD	ZENER DIODE
49C	CM INTERNAL OVERLOAD PROTECTOR	C1,C2,C3	CAPACITOR
49FI	FMI INTERNAL OVERLOAD PROTECTOR	R1	RESISTOR
49FO	FMO INTERNAL OVERLOAD PROTECTOR	V	VARISTOR
PRY	POWER RELAY	F	FUSE
SRY	CM STARTING RELAY	D	DIODE
RY	HEATER RELAY	THM1,THM2	THERMISTOR
SC	SOLENOID COIL (4-WAY VALVE)	TF	THERMAL FUSE
DTH	DEFROST THERMOSTAT	THL1	THERMOSTAT (THERMAL LIMITTER)
C.H	CRANK CASE HEATER	RC1,RC2,RC3	CAPACITOR
FCTH	THERMOSTAT	RC4,RC5	CAPACITOR (FOR STARTING)

Downloaded from www.Manualslib.com manuals search engine

- Electrical Wiring Diagram 18FH12X

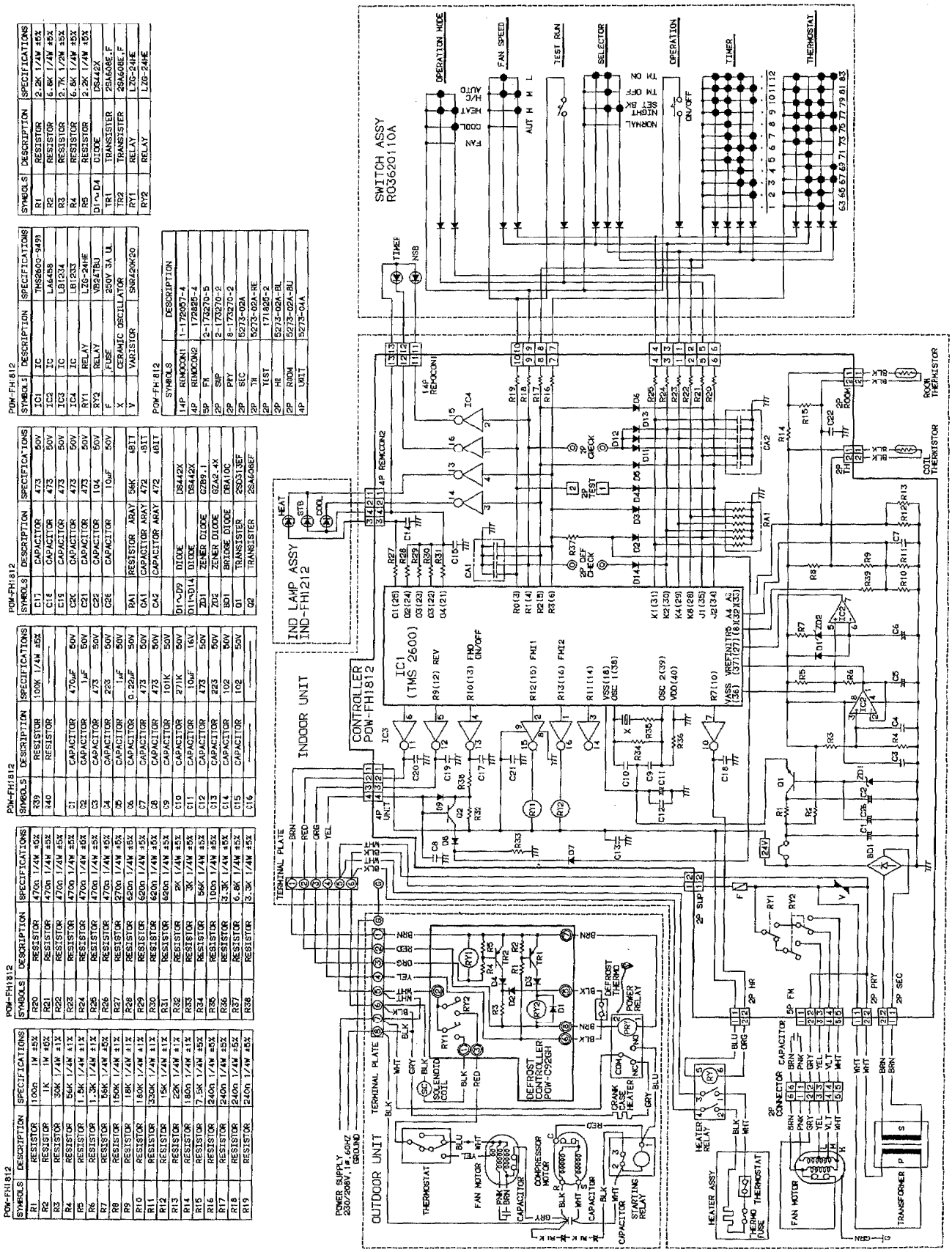

Downloaded from www.Manualslib.com manuals search engine

- Electrical Wiring Diagram 12FH12X

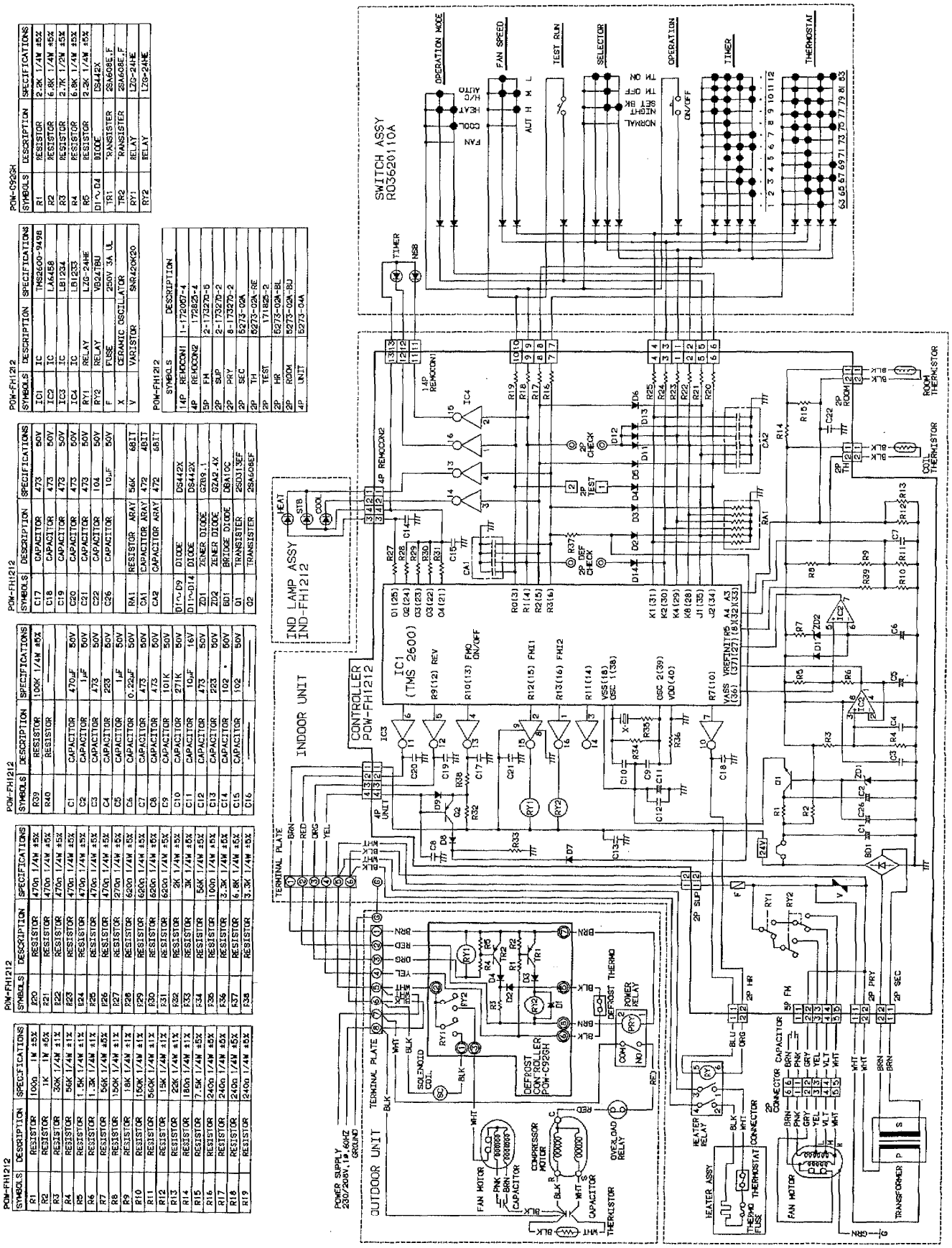

POW-FH1212			
SYMBOLS	DESCRIPTION	SPECIFICATIONS	
R1	RESISTOR	1000	1W ±5%
R2	RESISTOR	1K	1W ±5%
R3	RESISTOR	30K	1/4W ±1%
R4	RESISTOR	56K	1/4W ±1%
R5	RESISTOR	1.5K	1/4W ±1%
R6	RESISTOR	1.3K	1/4W ±1%
R7	RESISTOR	56K	1/4W ±5%
R8	RESISTOR	150K	1/4W ±1%
R9	RESISTOR	18K	1/4W ±1%
R10	RESISTOR	150K	1/4W ±1%
R11	RESISTOR	560K	1/4W ±1%
R12	RESISTOR	15K	1/4W ±1%
R13	RESISTOR	22K	1/4W ±1%
R14	RESISTOR	180K	1/4W ±1%
R15	RESISTOR	7.5K	1/4W ±5%
R16	RESISTOR	240Ω	1/4W ±5%
R17	RESISTOR	240Ω	1/4W ±5%
R18	RESISTOR	240Ω	1/4W ±5%
R19	RESISTOR	240Ω	1/4W ±5%

POW-FH1212			
SYMBOLS	DESCRIPTION	SPECIFICATIONS	
R20	RESISTOR	470Ω	1/4W ±5%
R21	RESISTOR	470Ω	1/4W ±5%
R22	RESISTOR	470Ω	1/4W ±5%
R23	RESISTOR	470Ω	1/4W ±5%
R24	RESISTOR	470Ω	1/4W ±5%
R25	RESISTOR	470Ω	1/4W ±5%
R26	RESISTOR	470Ω	1/4W ±5%
R27	RESISTOR	270Ω	1/4W ±5%
R28	RESISTOR	620Ω	1/4W ±5%
R29	RESISTOR	620Ω	1/4W ±5%
R30	RESISTOR	620Ω	1/4W ±5%
R31	RESISTOR	620Ω	1/4W ±5%
R32	RESISTOR	2K	1/4W ±5%
R33	RESISTOR	3K	1/4W ±5%
R34	RESISTOR	56K	1/4W ±5%
R35	RESISTOR	100Ω	1/4W ±5%
R36	RESISTOR	3.3K	1/4W ±5%
R37	RESISTOR	6.8K	1/4W ±5%
R38	RESISTOR	3.3K	1/4W ±5%

POW-FH1212			
SYMBOLS	DESCRIPTION	SPECIFICATIONS	
R39	RESISTOR	100K	1/4W ±5%
R40	RESISTOR	—	
C1	CAPACITOR	470μF	50V
C2	CAPACITOR	1μF	50V
C3	CAPACITOR	473	50V
C4	CAPACITOR	223	50V
C5	CAPACITOR	1μF	50V
C6	CAPACITOR	0.22μF	50V
C7	CAPACITOR	473	50V
C8	CAPACITOR	473	50V
C9	CAPACITOR	101K	50V
C10	CAPACITOR	271K	50V
C11	CAPACITOR	10μF	16V
C12	CAPACITOR	473	50V
C13	CAPACITOR	223	50V
C14	CAPACITOR	102	50V
C15	CAPACITOR	102	50V
C16	—	—	

POW-FH1212			
SYMBOLS	DESCRIPTION	SPECIFICATIONS	
C17	CAPACITOR	473	50V
C18	CAPACITOR	473	50V
C19	CAPACITOR	473	50V
C20	CAPACITOR	473	50V
C21	CAPACITOR	473	50V
C22	CAPACITOR	104	50V
C26	CAPACITOR	10μF	50V
RA1	RESISTOR ARAY	56K	6BIT
CA1	CAPACITOR ARAY	472	4BIT
CA2	CAPACITOR ARAY	472	6BIT
D1~D9	DIODE	DS442X	
D11~D14	DIODE	DS442X	
ZD1	ZENER DIODE	GZ89.1	
ZD2	ZENER DIODE	GZA2.4X	
BD1	BRIDGE DIODE	DB410C	
Q1	TRANSISTER	2SD313EF	
Q2	TRANSISTER	2SA608EF	

POW-FH1212		
SYMBOLS	DESCRIPTION	SPECIFICATIONS
IC1	IC	TMS2600-9498
IC2	IC	LA6458
IC3	IC	LB1234
IC4	IC	LB1233
RY1	RELAY	LZG-24HE
RY2	RELAY	VB247BU
F	FUSE	250V 3A UL
X	CERAMIC OSCILLATOR	6273-02A
V	VARISTOR	SNR420K20

POW-FH1212	
SYMBOLS	DESCRIPTION
14P REMOCON1	1-172067-4
4P REMOCON2	172825-4
5P FH	2-173270-5
2P SLP	2-173270-2
2P PRY	8-173270-2
2P SEC	6273-02A
2P TH	6273-02A-RE
2P TEST	171825-2
2P HR	6273-02A-BL
2P ROOM	6273-02A-BU
4P UNIT	6273-04A

POW-C926H		
SYMBOLS	DESCRIPTION	SPECIFICATIONS
R1	RESISTOR	2.2K 1/4W ±5%
R2	RESISTOR	6.8K 1/4W ±5%
R3	RESISTOR	2.7K 1/2W ±5%
R4	RESISTOR	6.8K 1/4W ±5%
R5	RESISTOR	3.3K 1/4W ±5%
D1~D4	DIODE	DS442X
TR1	TRANSISTER	2SA608E.F
TR2	TRANSISTER	2SA608E.F
RY1	RELAY	LZG-24HE
RY2	RELAY	LZG-24HE

Downloaded from www.Manualslib.com manuals search engine

- Electrical Characteristics

1 2 F H 1 1 X

Performance at 115V 1 ϕ - 60Hz			Indoor Unit		Outdoor Unit		Complete Unit	
			Fan Motor	Max. Heat	Fan Motor	Compressor	Cool or Heat	Max. Heat
Cool	Rated Load	A	0.40	-	0.70	9.9	11.0	-
		W	45	-	79	1,086	1,210	-
Heat	Rated Load	A	0.40	-	0.70	10.0	11.1	-
		W	45	-	79	1,116	1,240	-
Locked Rotor Amps.		A	0.44	-	0.75	60	-	-

1 2 F H 1 2 X

Performance at 230 / 208V 1 ϕ - 60Hz			Indoor Unit		Outdoor Unit		Complete Unit	
			Fan Motor	Max. Heat	Fan Motor	Compressor	Cool or Heat	Max. Heat
Cool	Rated Load	A	0.18/0.17	-	0.42/0.39	5.0/5.34	5.6/5.9	-
		W	40/35	-	95/80	1,075/1,065	1,210/1,180	-
Heat	Rated Load	A	0.18/0.17	13.0/11.8	0.42/0.39	4.6/4.94	5.2/5.5	18.2/17.3
		W	40/35	3,000/2,454	95/80	1,055/1,025	1,190/1,140	4,190/3,594
Locked Rotor Amps.		A	0.22/0.21	-	0.47/0.44	32	-	-

1 8 F H 1 2 X

Performance at 230 / 208V 1 ϕ - 60Hz			Indoor Unit		Outdoor Unit		Complete Unit	
			Fan Motor	Max. Heat	Fan Motor	Compressor	Cool or Heat	Max. Heat
Cool	Rated Load	A	0.54/0.53	-	0.47/0.47	7.69/8.30	8.7/9.3	-
		W	89/81	-	106/96	1,725/1,683	1,920/1,860	-
Heat	Rated Load	A	0.54/0.53	15.7/14.2	0.47/0.47	7.99/8.60	9.0/9.6	24.7/23.8
		W	89/81	3,600/2,944	106/96	1,785/1,763	1,980/1,940	5,580/4,884
Locked Rotor Amps.		A	0.46/0.42	-	0.67/0.67	54	-	-

Remarks: Rated Conditions : Cool, Outdoor unit entering air temperature 95°F D.B./75°F W.B.
Indoor unit entering air temperature 80°F D.B./67°F W.B.
Heat, Outdoor unit entering air temperature 47°F D.B./43°F W.B.
Indoor unit entering air temperature 70°F D.B.

Downloaded from www.Manualslib.com manuals search engine

- P.C.B. Ass'y (Printed pattern)

POW-FH1212 (for model FH1211X, FH1212X)

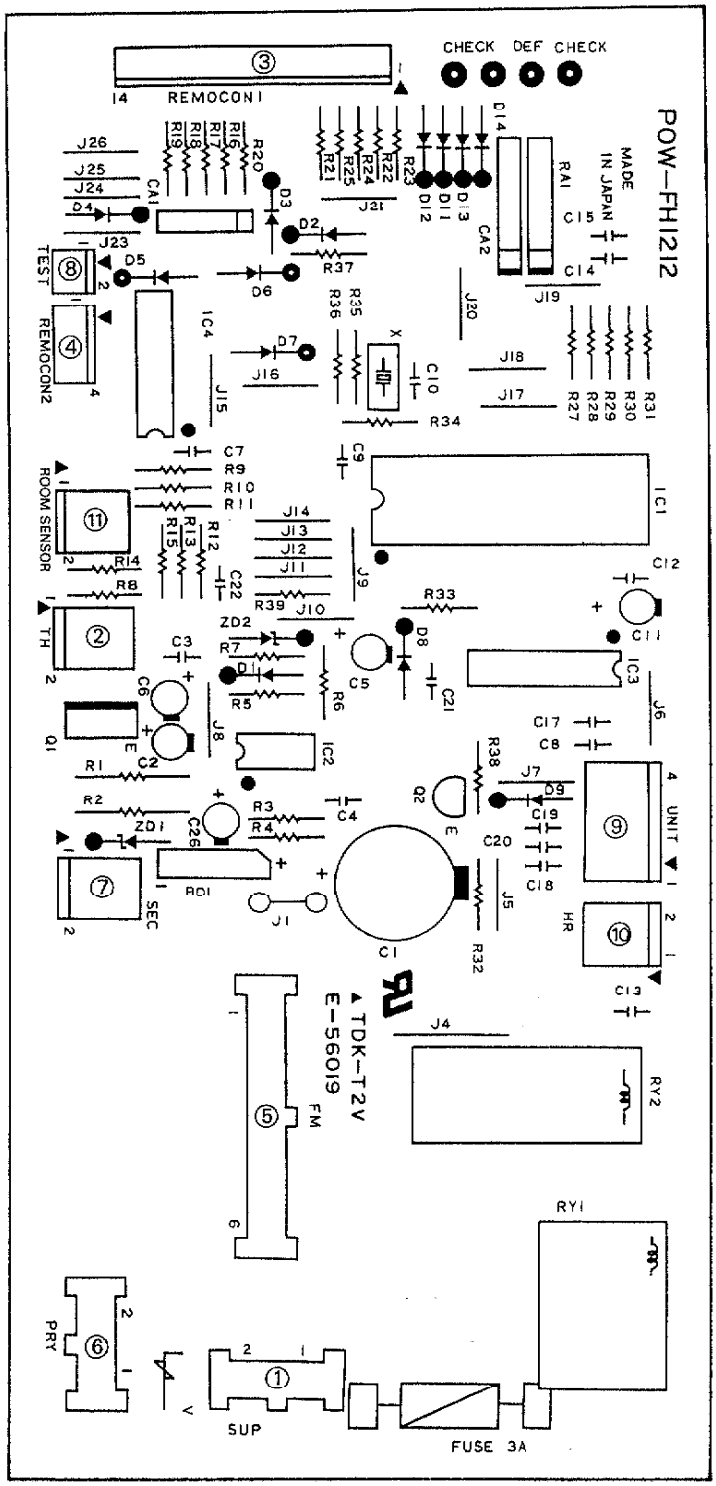

① Connector, Power Supply to P.C.B.*
② Connector, Thermistor, 9V. D.C.
③ Connector, Remote Control 1
(Control Switch Ass'y) 14P. 9V. D.C.
④ Connector, Remote Control 2
(Ind. Lamp Ass'y) 4P, 9V. D.C.
⑤ Connector, Fan Motor*
⑥ Connector, Transformer (Primary*)
⑦ Connector, Transformer (Secondary, 19V. A.C.)
⑧ Connector, Test, 9V. D.C.
⑨ Connector, Outdoor Unit Control, 24V. D.C.
⑩ Connector, Heater Relay, 24V. D.C.
⑪ Connector, Room Sensor 2P, 9V. D.C.

The asterisk "" indicates that line voltage is applied.

Downloaded from www.Manualslib.com manuals search engine

- P.C.B. Ass'y (Printed Pattern)

POW-FH1812 (for model FH1812X)

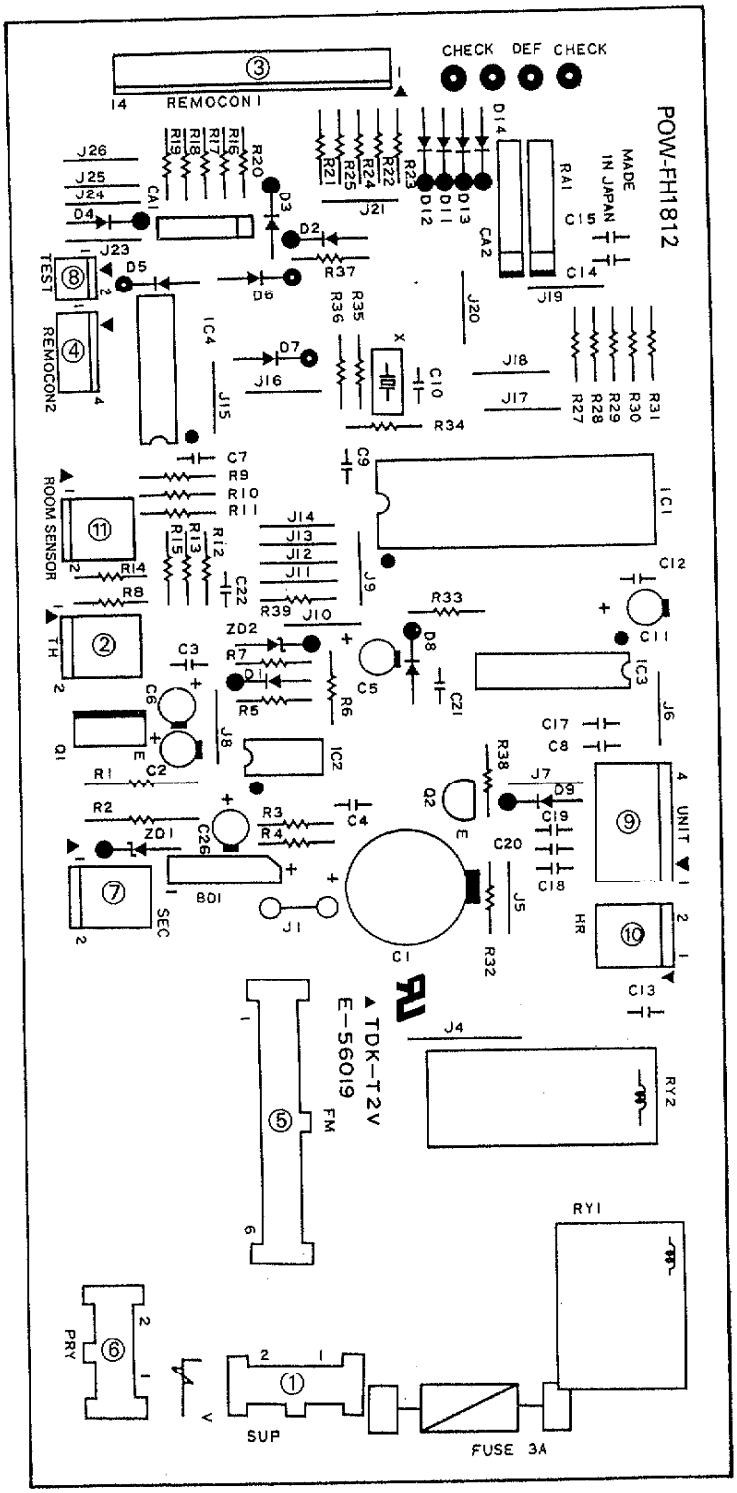

① Connector, Power Supply to P.C.B.*
② Connector, Thermistor, 9V. D.C.
③ Connector, Remote Control 1 (Control Switch Ass'y) 14P. 9V. D.C.
④ Connector, Remote Control 2 (Ind. Lamp Ass'y) 4P, 9V. D.C.
⑤ Connector, Fan Motor*
⑥ Connector, Transformer (Primary*)
⑦ Connector, Transformer (Secondary, 19V. A.C.)
⑧ Connector, Test, 9V. D.C.
⑨ Connector, Outdoor Unit Control, 24V. D.C.
⑩ Connector, Heater Relay, 24V. D.C.
⑪ Connector, Room Sensor 2P, 9V. D.C.

The asterisk "" indicates that line voltage is applied.

Downloaded from www.Manualslib.com manuals search engine

11. TROUBLESHOOTING

— Quick Access Index —

Page

1. Air conditioner does not operate **61**
(1) Circuit breaker trips (or fuse blows) **61**
a) When circuit breaker is set to ON, it is tripped soon (Resetting is not possible) **61**
b) Circuit breaker trips when the operation switch is depressed **62**
(2) Neither indoor unit nor outdoor unit runs **63**

2. Some part of air conditioner does not operate **64**
(1) Indoor fan does not run **64**
(2) Neither outdoor fan nor compressor runs **65**
(3) Only outdoor fan does not run **66**
(4) Only compressor does not run **67**
(5) Compressor frequently repeats ON and OFF **68**

3. Air conditioner operates, but abnormalities are observed **69**
(1) Heating operation cannot be done **69**
(2) Poor cooling **70**
(3) Excessive cooling **71**
(4) Poor heating **72**
(5) The electric heater does not work **73**

Note 1: Check the following operations at first.

	Operations	
	Cooling	**Heating**
1-(2) Neither indoor unit nor outdoor unit runs.	——	Thermo. OFF 5 minutes OFF timer
2-(1) Indoor fan does not run.	——	Cold Draft Prevention
2-(2) Neither outdoor fan nor compressor runs.	Thermo. OFF 3 minutes OFF timer Freeze Prevention	——
2-(3) Only outdoor fan does not run.	——	Overload Prevention
Neither indoor fan nor outdoor fan runs.	——	Defrosting Mode

Refer to 7 FUNCTION.

Note 2: Trouble by Room Temp. Sensor

Defect of Room Temp. Sensor	Operations	Trouble
Cutoff (Resistance is ∞)	Cooling	2-(2) Neither outdoor fan nor compressor runs.
	Heating	Operation does not Thermo OFF.
Short-circuit (Resistance is 0)	Cooling	3-(2) Excessive cooling (Operation does not Thermo OFF.)
	Heating	2-(2) Neither outdoor fan nor compressor runs.

Refer to Page 8.

Downloaded from www.Manualslib.com manuals search engine

1. Air conditioner does not operate

(1) Circuit breaker trips (or fuse blows)

a) When circuit breaker is set to ON, it is tripped soon (Resetting is not possible)

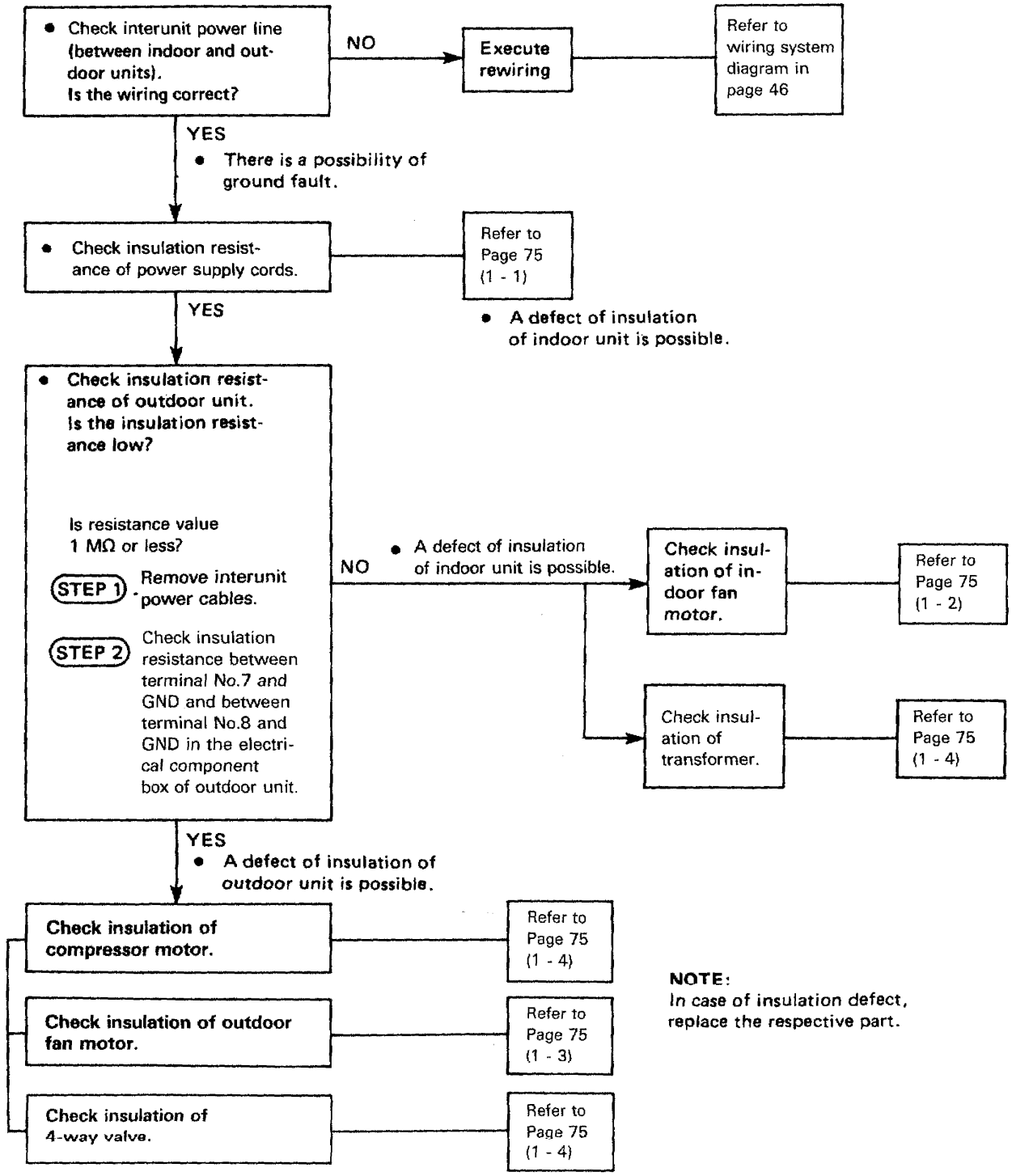

NOTE:
In case of insulation defect, replace the respective part.

Downloaded from www.Manualslib.com manuals search engine

b) Circuit breaker trips when the operation switch is depressed.

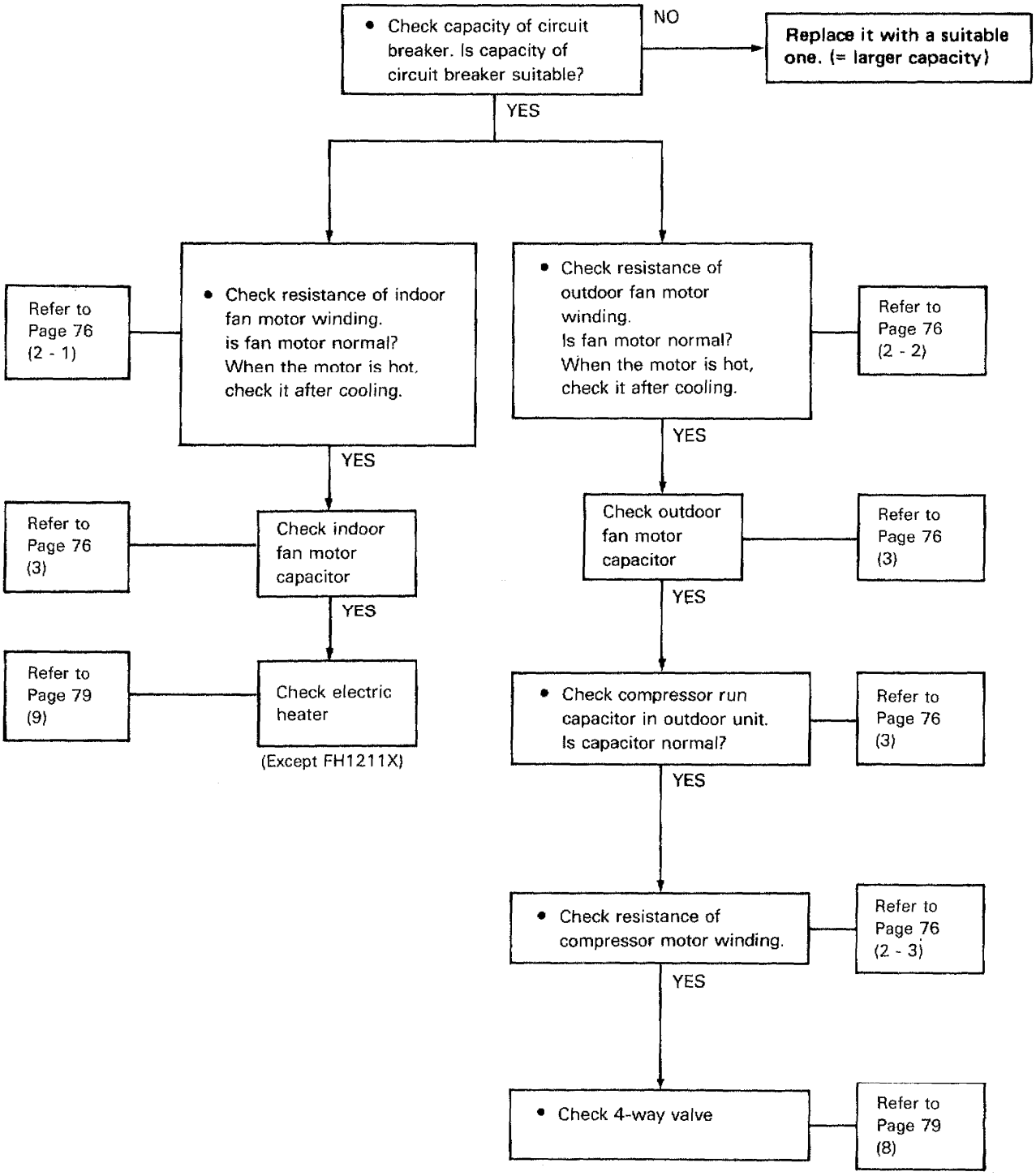

NOTE: In case of defect, replace the respective part.

Downloaded from www.Manualslib.com manuals search engine

(2) Neither indoor unit nor outdoor unit runs

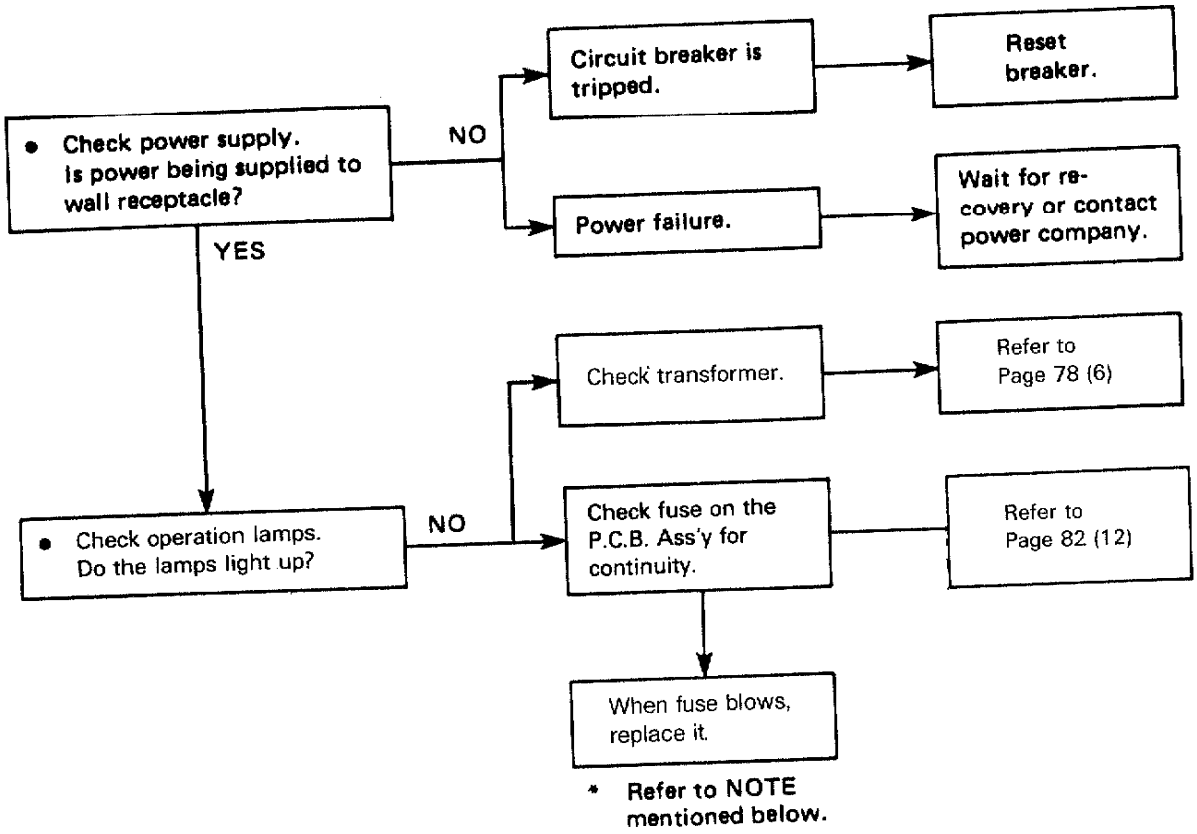

NOTE: If fuse blows again, check the following items:

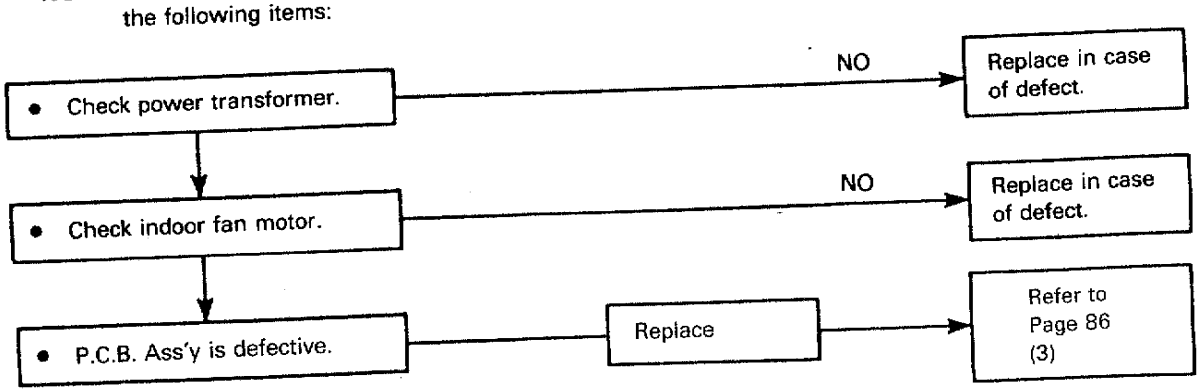

Downloaded from www.Manualslib.com manuals search engine

2. Some part of air conditioner does not operate

(1) Only indoor fan does not run

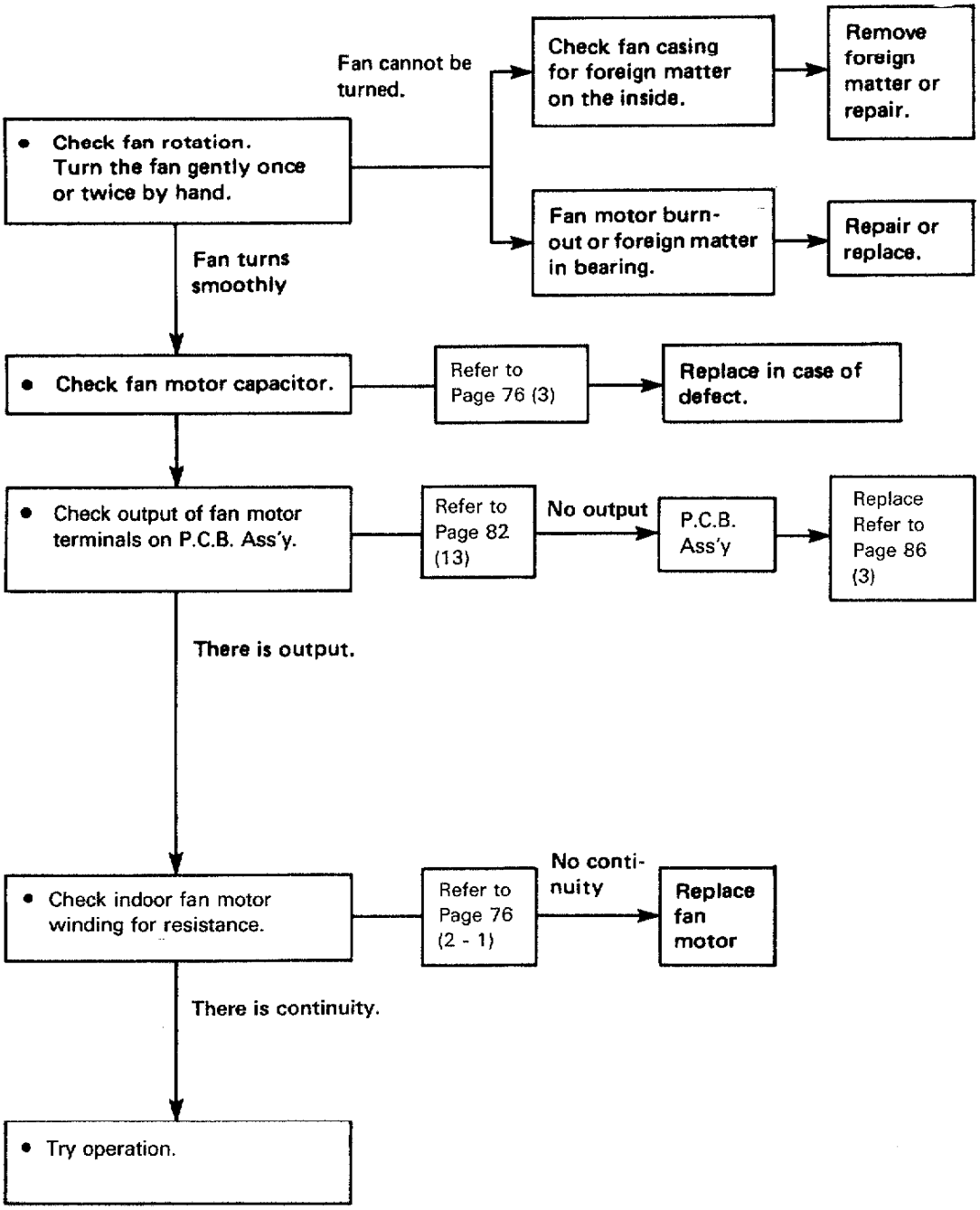

Downloaded from www.Manualslib.com manuals search engine

(2) Neither outdoor fan nor compressor runs

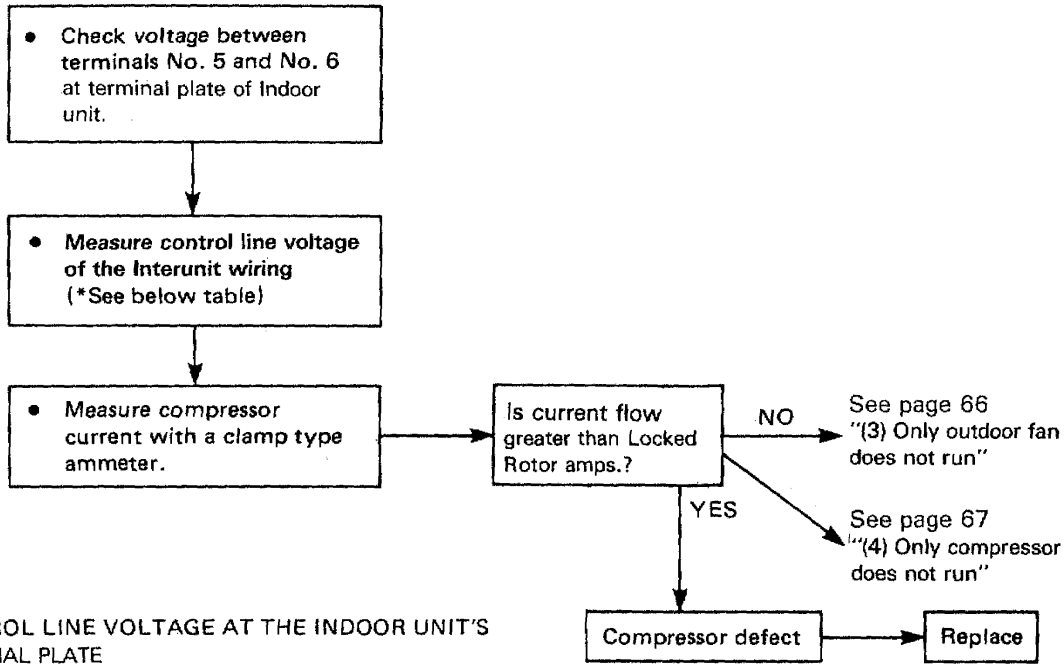

* CONTROL LINE VOLTAGE AT THE INDOOR UNIT'S TERMINAL PLATE

Signal	Terminal No. (to be checked)	Thermo. Cycle	Cooling Operation	Heating Operation
Compressor ON – OFF	1 – 2	ON	24 VDC	
		OFF	0 V	
Heating	1 – 3	–	0 V	24 VDC
				* 0 V when defrosting
Fan motor ON – OFF	1 – 4	ON	Approx. 9.5 V or 14.5 V	
		OFF	0 V (Defrosting and Overload Condition are included)	

Downloaded from www.Manualslib.com manuals search engine

(3) Only outdoor fan does not run

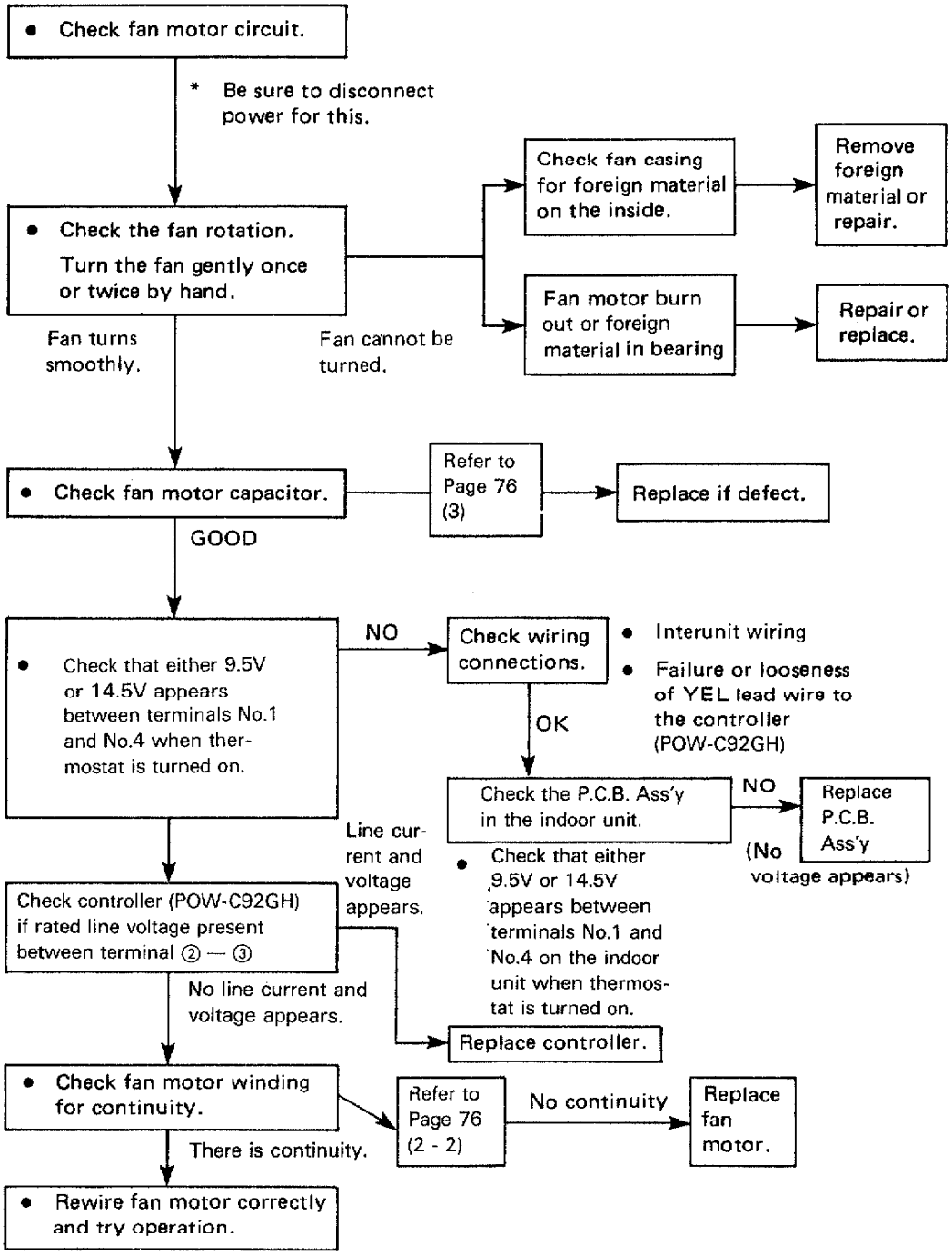

Downloaded from www.Manualslib.com manuals search engine

(4) Only compressor does not run

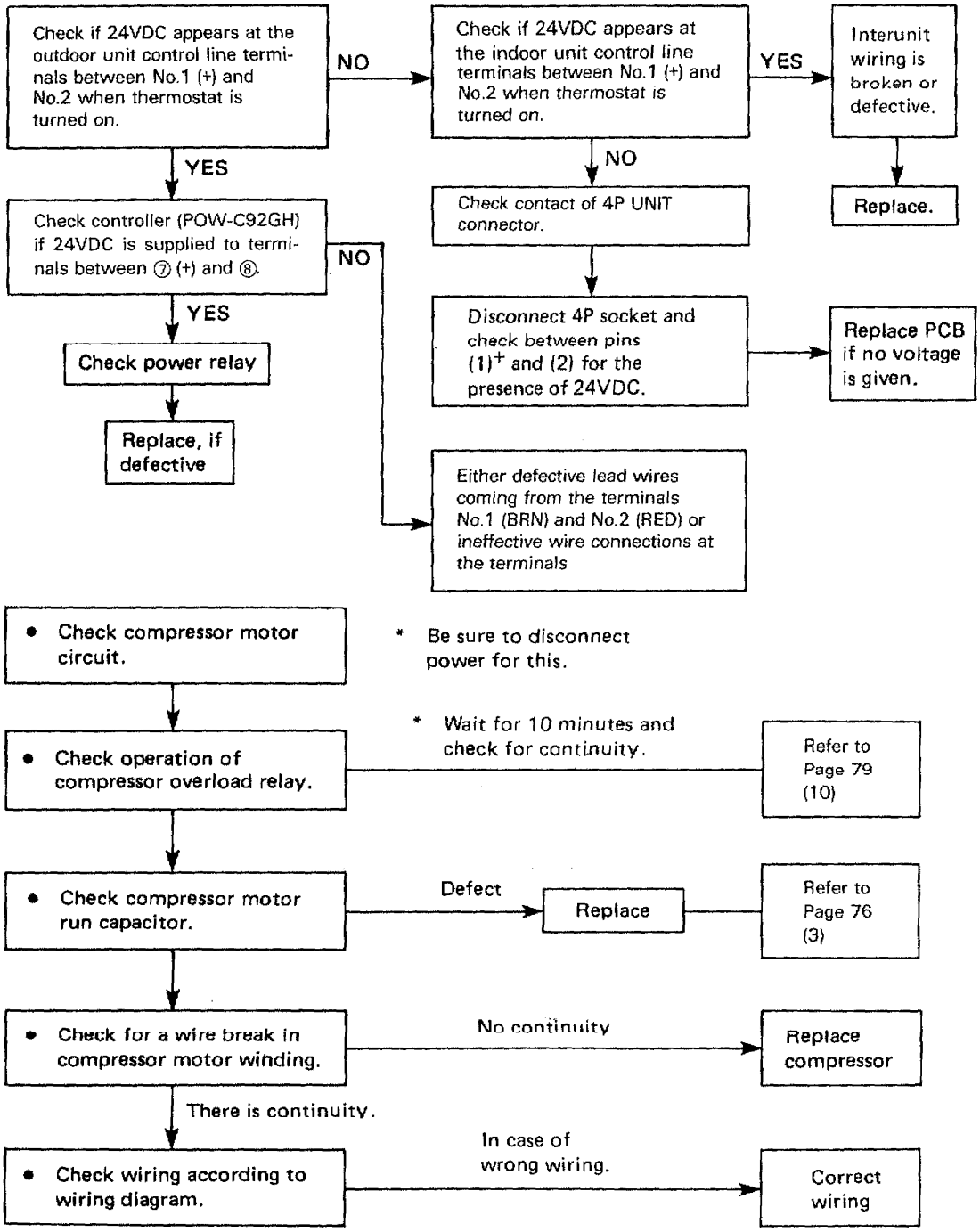

Downloaded from www.Manualslib.com manuals search engine

(5) Compressor frequently repeats ON and OFF

(Only compressor repeats ON and OFF, while indoor unit and outdoor fan runs without fail.)

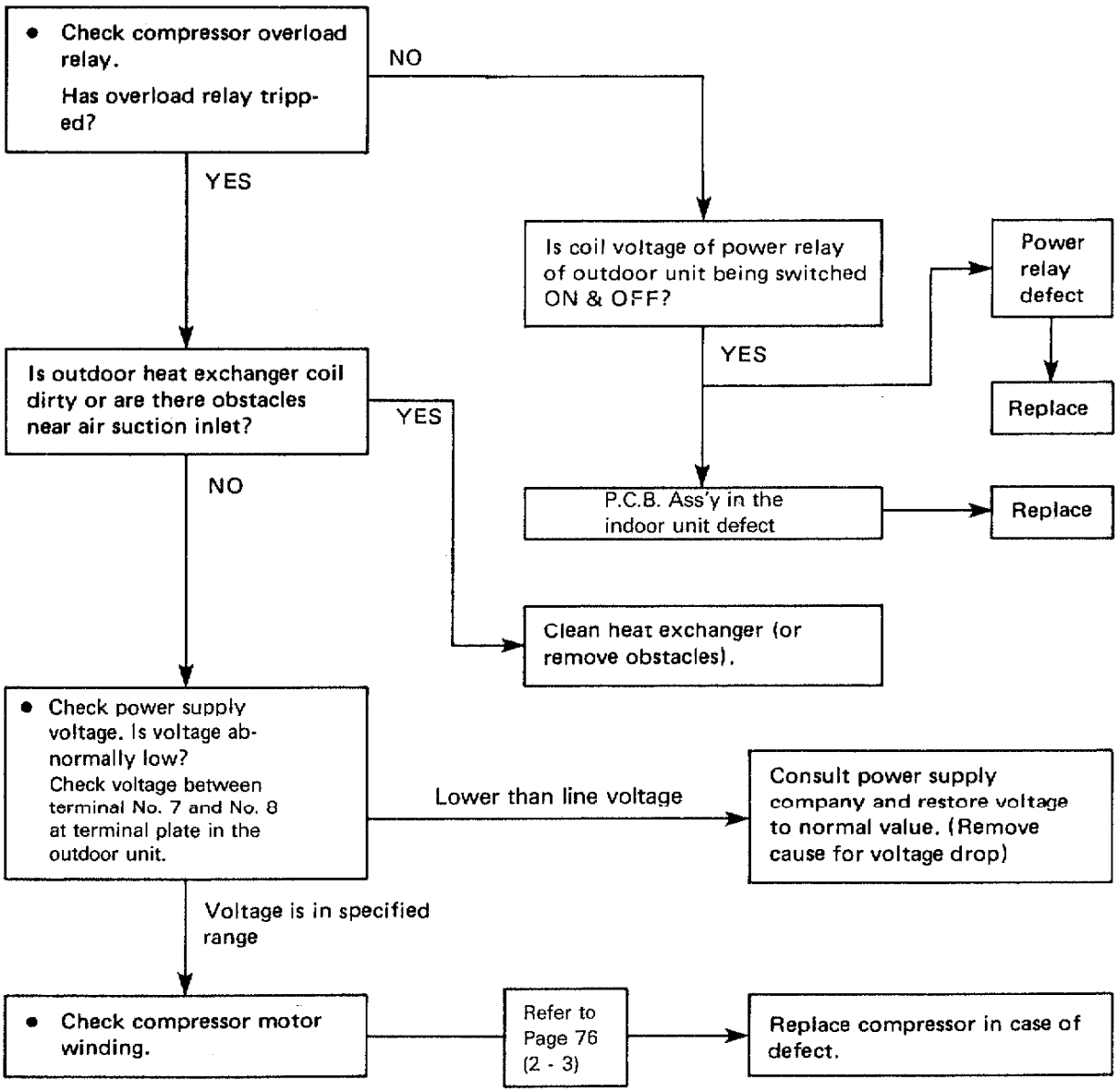

Downloaded from www.Manualslib.com manuals search engine

3. Air conditioner operates, but abnormalities are observed

(1) Heating operation cannot be done. (only cooling is possible).

1) 4-way valve malfunction.

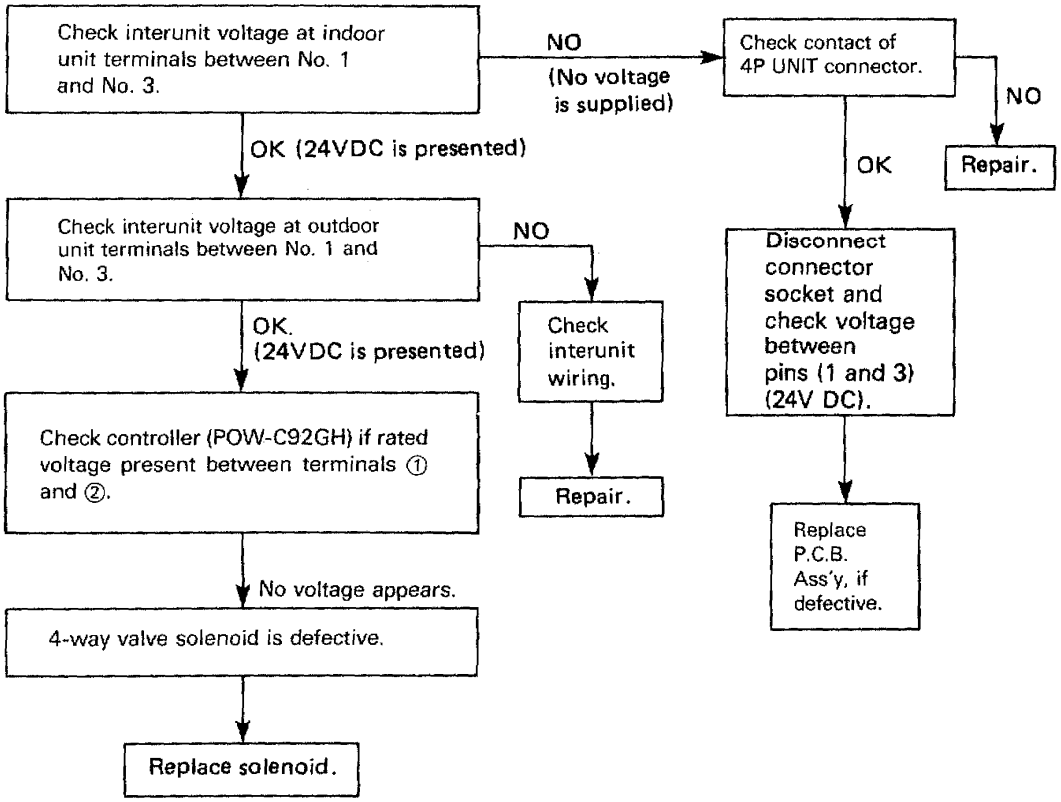

2) Defrosting system malfunction (at heating)

2-1. Defrosting can be achieved after continuous operation of the unit for a long time.

- Remove defrost thermostat from the controller (outdoor unit) terminals ⑤ and ⑥ and check for conductivity.

  Defrost thermostat is normal if following conditions will be satisfied:

OFF	Maximum 39° F	ON	Minimum 54° F

If the thermostat stays ON below 39° F, it is defective. ⟶ Replace the thermostat.

2-2. No defrosting will be taken place at all.

P.C.B. Ass'y (indoor unit) is defective. ⟶ Replace the P.C.B. Ass'y

Downloaded from www.Manualslib.com manuals search engine

(2) Poor cooling

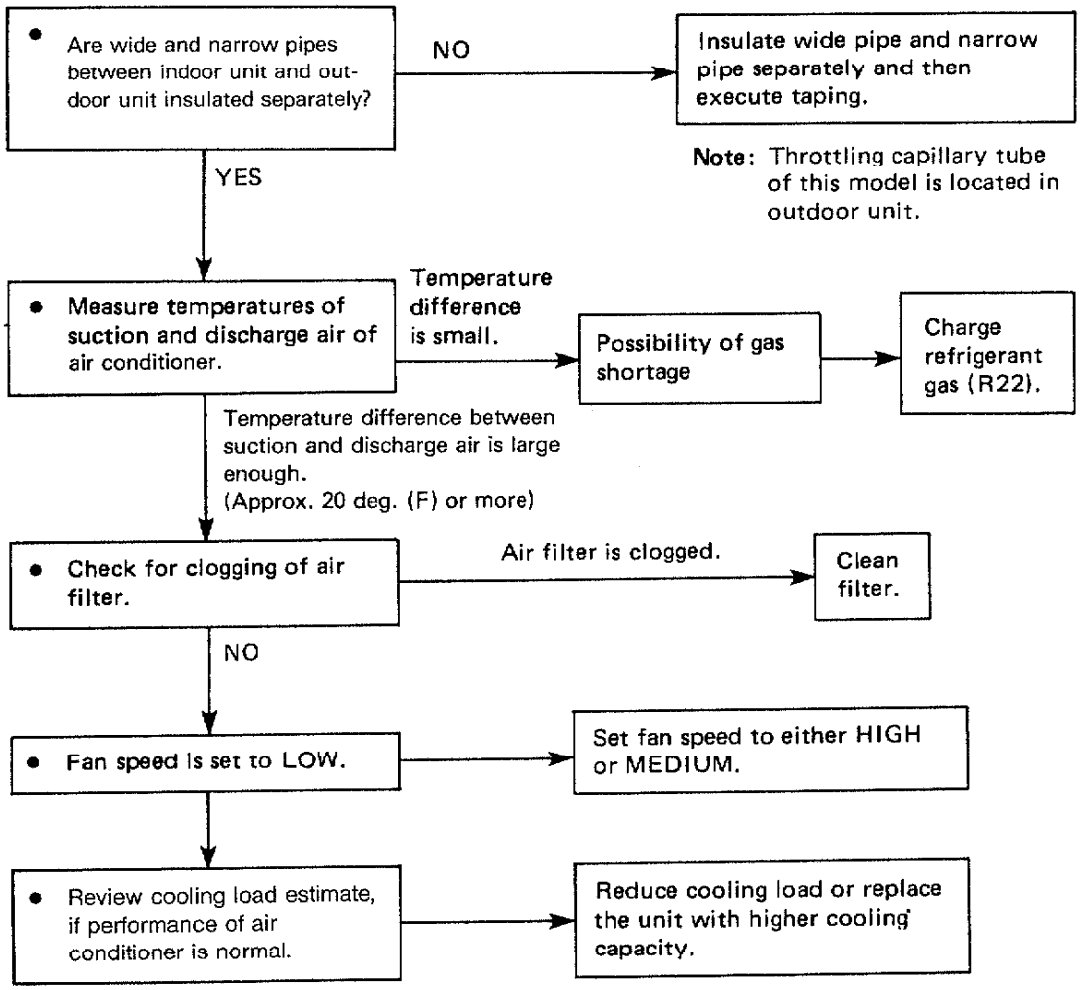

Downloaded from www.Manualslib.com manuals search engine

(3) Excessive cooling

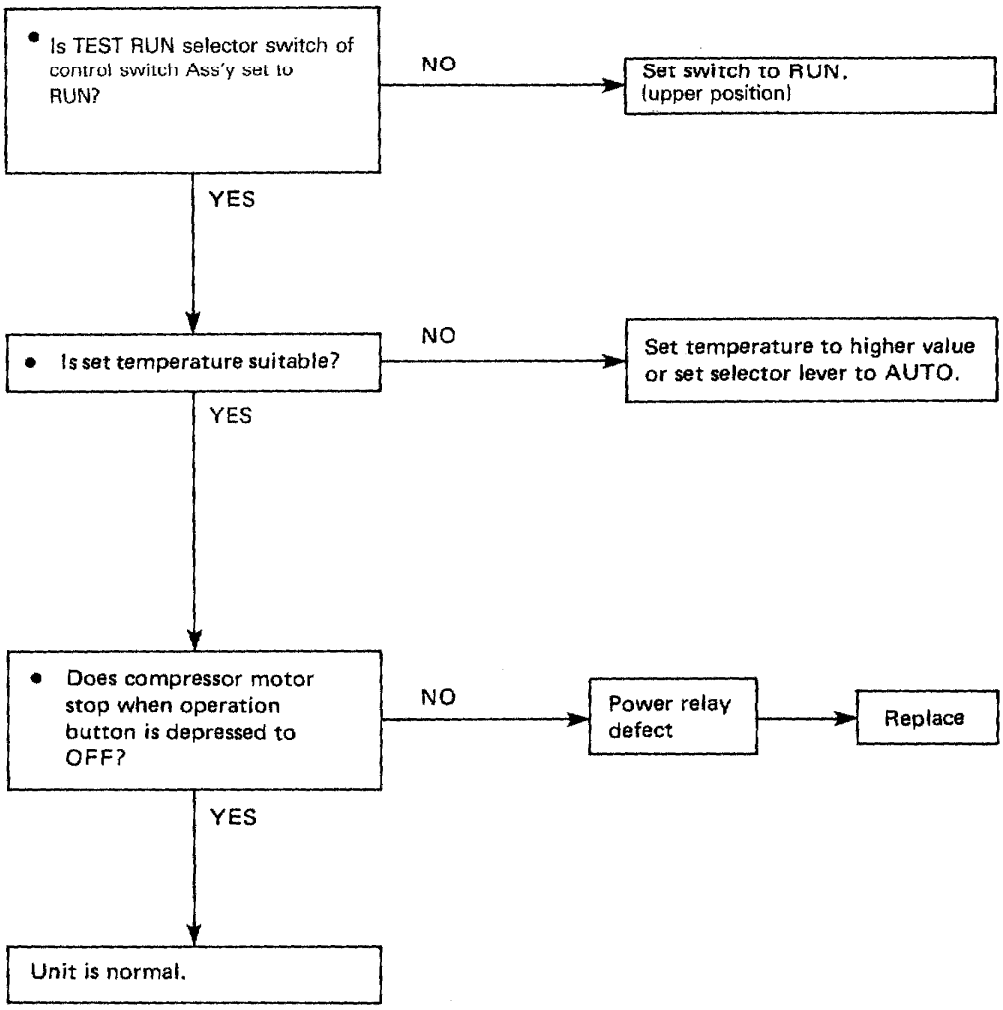

Downloaded from www.Manualslib.com manuals search engine

(4) Poor heating

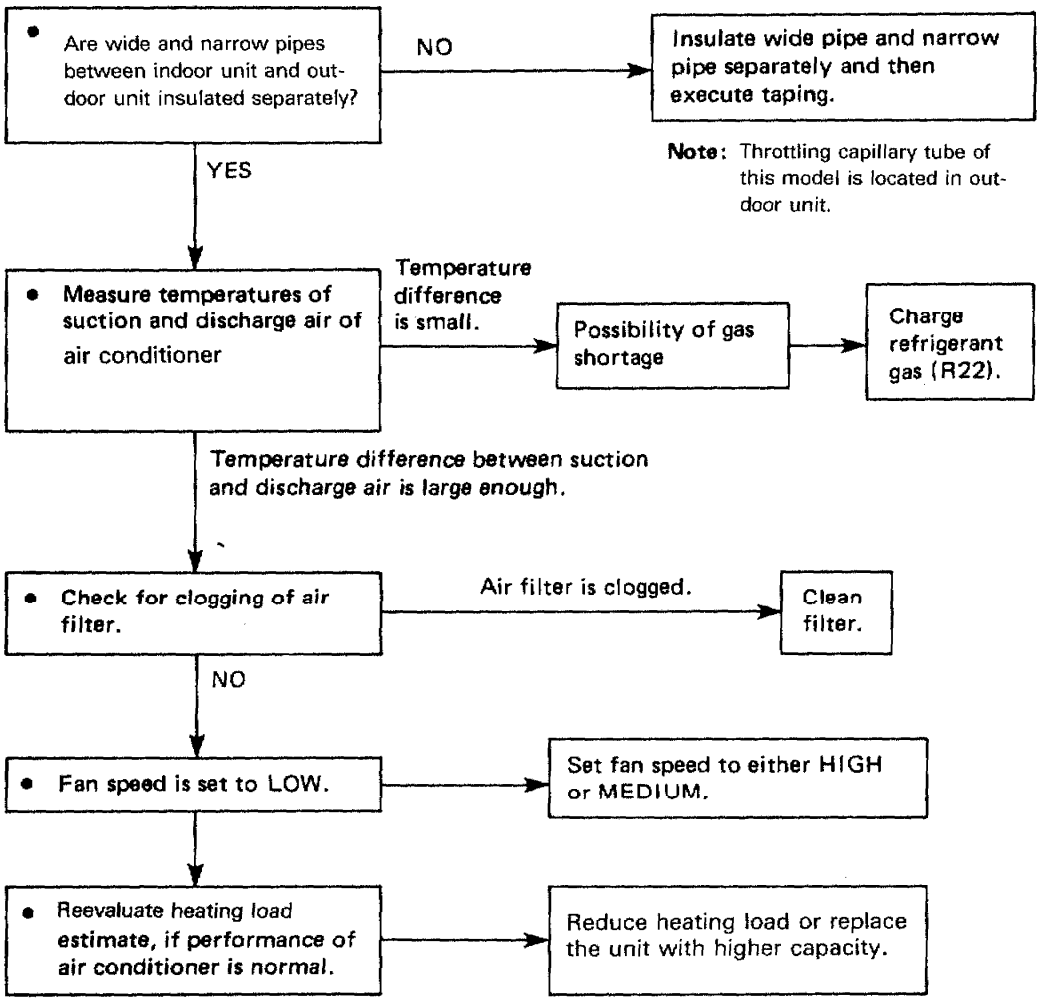

Downloaded from www.Manualslib.com manuals search engine

(5) The electric heater does not work

12FH12X and 18FH12X

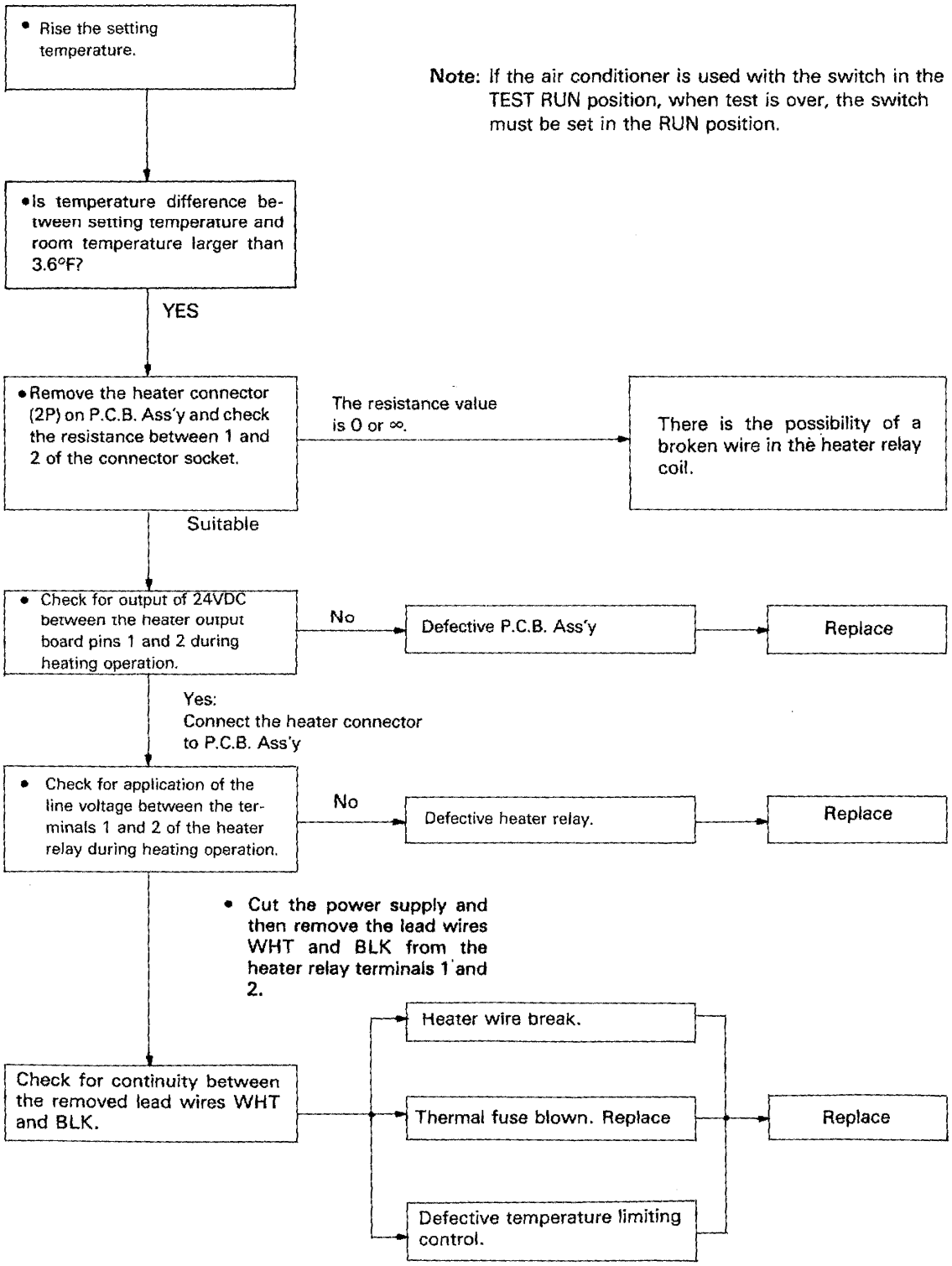

Downloaded from www.Manualslib.com manuals search engine

12. CHECKING AND REPLACING ELECTRICAL COMPONENTS

— Quick Access Index —

		Page
1.	Measurement of Insulation Resistance	75
2.	Checking of the Motor Winding	76
3.	Checking of the Motor Capacitor	76
4.	Checking of the Relay	77
5.	Checking of the Thermistor (PTC)	77
6.	Checking of the Transformer	78
7.	Checking of the Thermostat	78
8.	Checking of the 4-way valve	79
9.	Checking of the Heater Protector	79
10.	Checking of the Compressor Overload Relay	79
11.	Checking of the Control Switch Ass'y	80
12.	Checking of the Continuity of Fuse on the P.C.B. Ass'y	82
13.	Checking of the Output of the P.C.B. Ass'y for Fan Motor Terminals	82

Downloaded from www.Manualslib.com manuals search engine

1. Measurement of Insulation Resistance

- The insulation is in good condition if the resistance exceeds 1 MΩ

1-1 Power Supply Cords

Clamp the ground line of the Power Supply Cord with a lead clip of the insulation resistance tester and measure the resistance by placing a probe on either of the two power lines.
Then also measure the resistance between the ground line and the other power line. (Fig. 1)

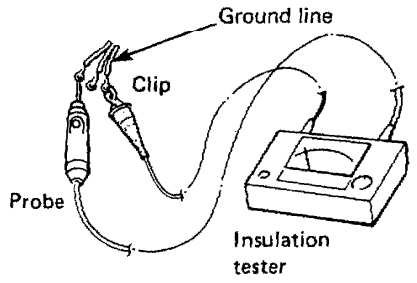

Fig. 1

1-2 Indoor Unit

Clamp the aluminum plate fin or copper tube with a lead clip of the insulation resistance tester and measure the resistance by placing a probe on ⑤, and then ⑥ on the terminal plate. (Fig. 2)

1-3 Outdoor Unit

Clamp the metallic part of the unit with a lead clip of the insulation resistance tester and measure the resistance by placing a probe on ⑤, and then ⑥ on the terminal plate. (Fig. 2)

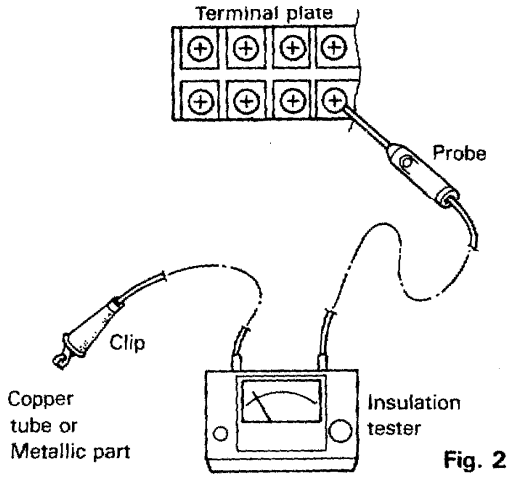

Fig. 2

1-4 Measurement of Insulation Resistance for Electric Parts.

Disconnect the lead wires of electric part from terminal plate, P.C.B. Ass'y or capacitor etc.. Like remove the connector.
Then measure the insulation resistance by method of Fig. 1~4.
Refer to Electric Wiring Diagram.

Note:
If the probe does not enter the pole because the hole is too narrow then use a probe with a thinner pin.

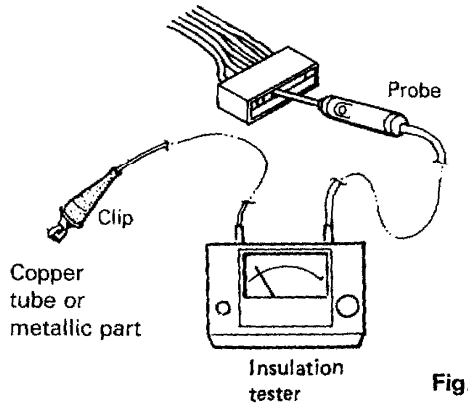

Fig. 3

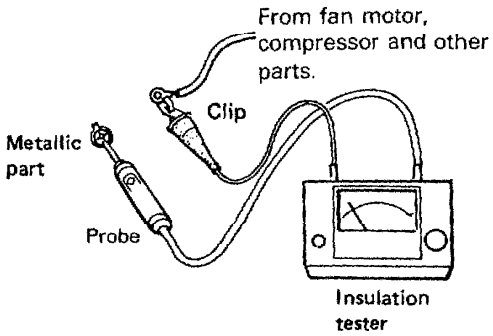

Fig. 4

Downloaded from www.Manualslib.com manuals search engine

2. Checking of the Motor Winding

- Refer to Major Component Specifications (Coil resistance)

2-1 Indoor Fan Motor
See page 4, 5 and 6.

2-2 Outdoor Fan Motor
See page 4, 5 and 6.

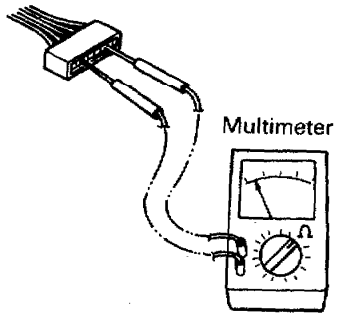

Fig. 5

2-3 Compressor Motor
Remove the terminal cover of the compressor motor, set the resistance measuring range of the multimeter to "X1Ω" and check the continuity between each pair out of the 3 terminals as indicated in Fig. 6.
See page 4, 5 and 6.

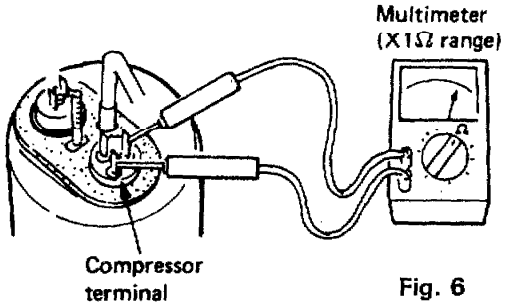

Fig. 6

3. Checking of the Motor Capacitor

Checking of any of the indoor fan motor capacitor, outdoor fan motor capacitor and compressor motor capacitor can be done by the same method.

Remove both the lead wire terminals connected to the capacitor, place the probe on the capacitor terminals as shown in the Fig. 7 and observe the deflection of the pointer, setting the resistance measuring range of the multimeter to the maximum value.

For good condition of the capacitor the pointer bounces to a great extent and then gradually returns to its original position.

The range of deflection and deflection time differ according to the capacity of the capacitor.

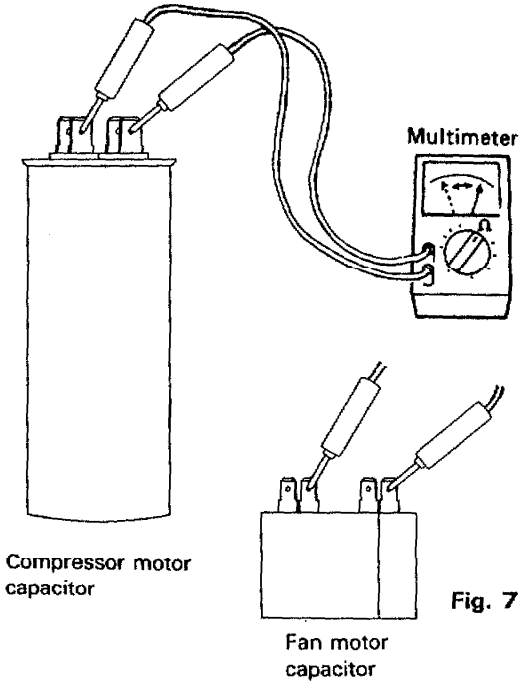

Fig. 7

Downloaded from www.Manualslib.com manuals search engine

4. Checking of the Relay

- Refer to Other Component Specifications
  See page 7.

G4E-2123T-US
(Heater relay)

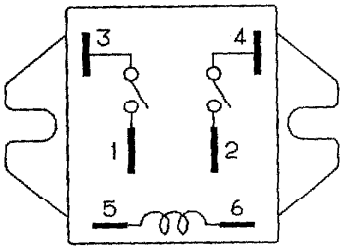

Fig. 8

DFU24D1-F(M)
(Power relay)

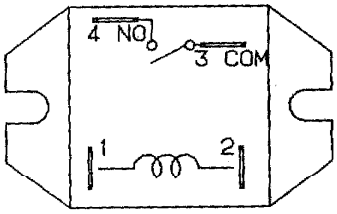

Fig. 9

AMVL300A
(Compressor starting relay)

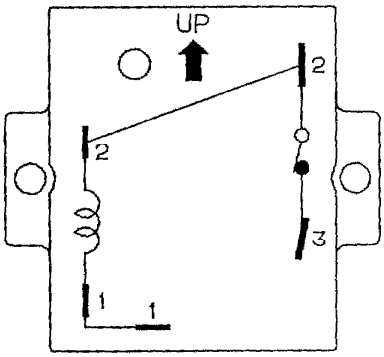

Fig. 11

DFU24D1F
(Power relay)

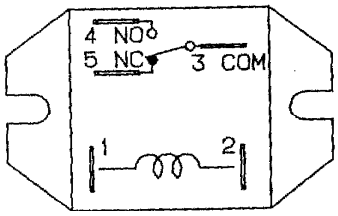

Fig. 10

5. Checking of the Thermistor (PTC)

- Refer to Other Component Specifications.
  See page 7.

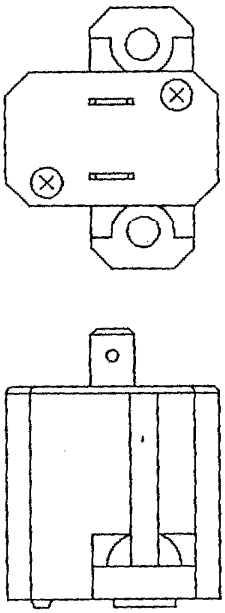

Fig. 12

Downloaded from www.Manualslib.com manuals search engine

6. Checking of the Transformer

- Refer to Other Component Specifications

See page 8.

7. Checking of the Thermostat

- Refer to Other Component Specifications.

See page 8.

TRS-12M160UL
Defrost thermostat

Fig. 13

MQT5SWU
Thermostat for outdoor fan speed control.

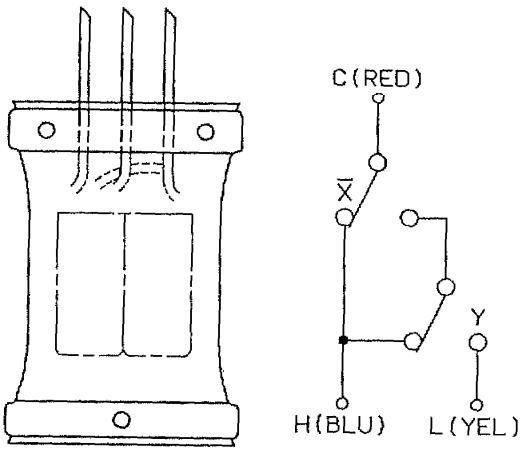

Fig. 14

Downloaded from www.Manualslib.com manuals search engine

8. Checking of the 4-way valve

- Refer to Other Component Specifications. See page 9.

9. Checking of the Heater Protector

- Refer to Other Component Specifications. See page 9.

10. Checking of the Compressor Overload Relay

Remove both lead wires connected to the compressor overload relay. Set the resistance measuring range of the multimeter to "X1Ω" and check the continuity between terminals of the overload relay. After leaving the Compressor Overload Relay at room temperature at least half an hour, perform the measurement.

Downloaded from www.Manualslib.com manuals search engine

11. Checking of the Control Switch Ass'y Proper

(Check each item, referring to the P.C.B. Ass'y and the circuit diagrams)

A. Caution: Use of the Test Switch
(RUN/TEST RUN)
"TEST RUN" shows the position to run the air conditioner for the test at the installment.
If this operation is continued for a long time, there would be a bad effect on the air conditioner because of over-cooling. Therefore, use this switch only for checking, and in any case, **DO NOT KEEP ON COOLING FOR MORE THAN 15 MIN. UNDER TEST RUN MODE.**

When the checking is over, **TURN THE SWITCH BACK TO ITS ORIGINAL POSITION (= RUN) WITHOUT FAIL.**

B. Checking of the Items of the Control Switch Ass'y

At first, pull out the connector (14P) of the control switch ass'y from the P.C.B. ass'y of the unit.

NOTE:
If the probe does not enter the pole because the hole is too narrow then use a probe with a thinner pin.

(1) Fan Speed Selector
Check the continuity of the connector No. 3 and No. 4 against No. 10 (place the positive (+) probe on No. 10 and negative (–) probe on No. 3 and then No. 4).

Checking points	Position of the selector			
	High	Med.	Low	Auto
10 – 3	NO	YES	YES	NO
10 – 4	YES	YES	NO	NO

NOTE: YES ..... Continuity (Table-1)
NO ..... Discontinuity

(2) Checking of the Operation
Measure the continuity between No. 5, 6 and No. 9 (placing the positive (+) probe).

Checking points	Position of the selector			
	Fan	Cool	Heat	Auto
9 — 5	NO	NO	YES	YES
9 — 6	NO	YES	YES	NO

(Table-2)

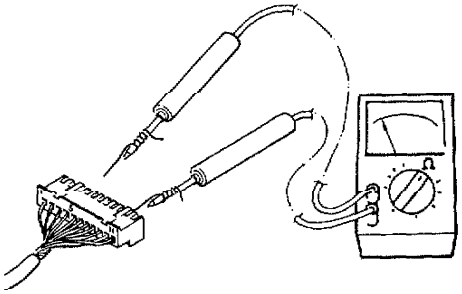

Fig. 15

NOTE: YES ..... Continuity
NO ..... Discontinuity

Downloaded from www.Manualslib.com manuals search engine

(3) Checking of the Selector
Check the continuity of the connectors No. 1, 2 and 3 (placing the negative (–) probe) against No. 9 (placing the positive (+) probe).

Connector No.	Position of the Selector			
	MANUAL	NIGHT SETBACK	TIMER	
			ON	OFF
9 — 3	NO	NO	YES	NO
9 — 1	NO	YES	YES	YES
9 — 2	NO	YES	NO	NO

NOTE
YES ..... Continuity
NO ..... Discontinuity

(Table-3)

(4) Checking of the Operation Button

The operating switch is in good working condition if there is continuity between No. 4 (plating the negative (–) probe) and No. 9 (placing positive (+) probe) while the button is pressed.

(5) Checking of the Timer

Measure the continuity between No. 4, 3, 1, 2 and No. 8 (placing the positive (+) probe).

Connector No.	Position of the Selector											
	1	2	3	4	5	6	7	8	9	10	11	12
8 – 4	–	–	–	–	–	–	–	–	Y	Y	Y	Y
8 – 3	–	–	–	–	Y	Y	Y	Y	Y	Y	Y	Y
8 – 1	–	–	Y	Y	Y	Y	–	–	–	–	Y	Y
8 – 2	–	Y	Y	–	–	Y	Y	–	–	Y	Y	–

Y for YES = There is continuity.

(Table-4)

(6) Checking of the Thermostat

Measure the continuity between No. 4, 3, 1, 2 and No. 7 (placing the positive (+) probe).

Connector No.	Position of the Selector										
	63	65	67	69	71	73	75	77	79	81	83
7 — 4	–	–	–	–	–	Y	Y	Y	Y	Y	Y
7 — 3	–	Y	Y	Y	Y	Y	Y	Y	Y	–	–
7 — 1	Y	Y	Y	–	–	–	–	Y	Y	Y	Y
7 — 2	–	–	Y	Y	–	–	Y	Y	–	–	Y

Y for YES = There is continuity.

(Table-5)

If there is abnormality during checking at any of the above step from (1) to (6), replace the control switch ass'y as it is.

CAUTION:
Do not disassemble the Control Switch Ass'y.
It is supplied as a complete assembly and is carefully adjusted in the factory by skillful workmanship. Inexperienced disassembly will cause trouble and malfunction in the unit.

Downloaded from www.Manualslib.com manuals search engine

12. Checking of the Continuity of Fuse on the P.C.B. Ass'y

Check the continuity by the multimeter as shown in Fig. 16

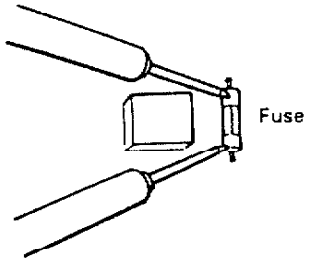

Fig. 16

NOTE **Method to Replace Fuse on the P.C.B. Ass'y**

1. Remove the P.C.B. ass'y.
2. Pull out the fuse at the metal clasp by a pair of pliers while heating the soldered leads on the back side of the P.C.B. ass'y with a soldering iron (30W or 60W). Fig. 17
3. Remove the fuse ends one by one. For replacement, insert a fuse of the same rating and solder it.
   (Allow time to radiate heat during soldering so that the fuse does not melt).

CAUTION : Be sure to replace the varistor adjacent to the fuse when the fuse is blown.

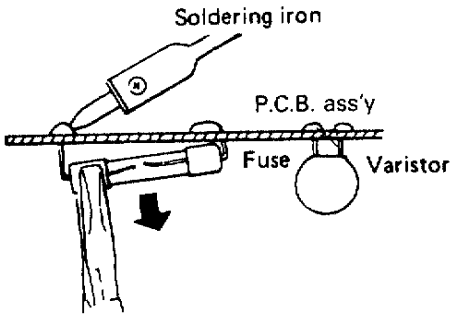

Fig. 17

13. Checking of the Output of the P.C.B. Ass'y for Fan Motor Terminals

Take out the fan motor connector from P.C.B. Ass'y and be sure that there is no danger of short circuit in other parts before supplying electricity to the unit. After that, supply electricity to the unit and set the selector to "MANUAL". Then, turn on the operation switch.
Now measure the voltage between these pins by the multimeter. The P.C.B. Ass'y is in good working condition if the voltage output becomes same as those shown in the below tables.

Pair of Pins	FAN		
	Low	Med.	High
2 — 3	*	0	0
2 — 4	0	*	0
2 — 5	0	0	*

* Line voltage

(Table-6)

Downloaded from www.Manualslib.com manuals search engine

13. DISASSEMBLY AND SERVICE PROCEDURES

— Quick Access Index —

Page

INDOOR UNIT

1. Casing — Removal 84
2. Electrical Component Box 84

   — Access and Removal —

3. PCB Ass'y — Removal 86
4. Evaporator (= Indoor Heat Exchanger) — Removal 87
5. Electric Heater — Removal 88
6. Fan and Fan Motor — Removal 88

OUTDOOR UNIT

7. Casing — Removal 90
8. Fan and Fan Motor — Removal 90

Downloaded from www.Manualslib.com manuals search engine

INDOOR UNIT

1. Casing — Removal

1) Remove the two installation screws (a) of the front panel of the indoor unit with a Phillips screwdriver. Fig. 1

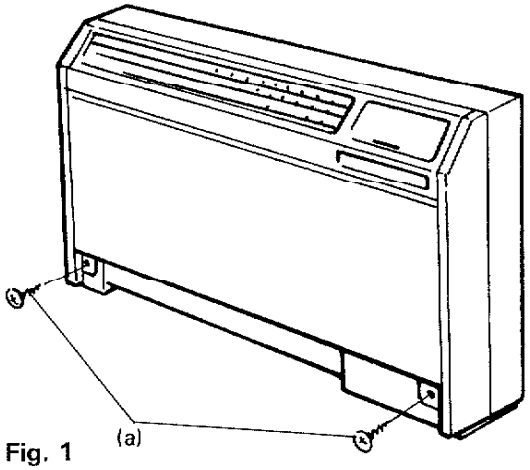

Fig. 1

2) Pull the bottom part of the front panel towards you and then lift to remove the front panel. Fig. 2

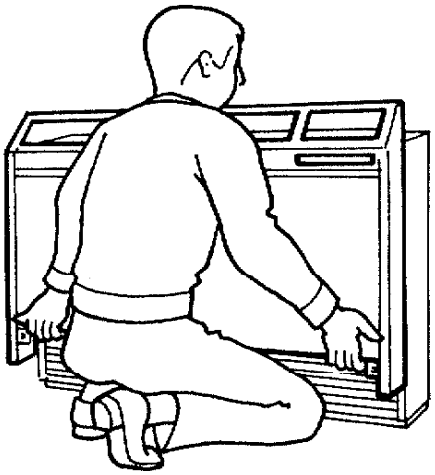

Fig. 2

2. Electrical Component Box — Access and Removal

1) Remove the casing.
2) Remove the two installation screws (a) of the cover of the electrical component box with a Phillips screwdriver, and then remove the cover. Fig. 3

CAUTION:

1) Connector pins are thin and delicate, therefore never apply excessive force when disconnecting the socket.

2) Before accessing inside the electrical component box, be sure to check that power to the unit is disconnected.

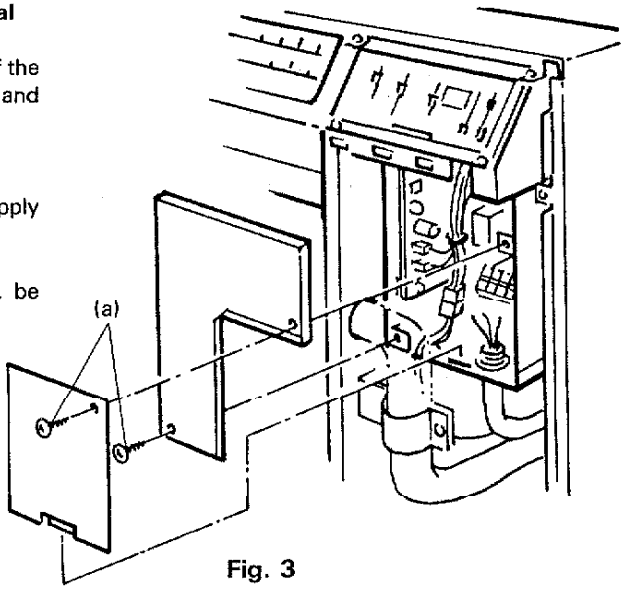

Fig. 3

Downloaded from www.Manualslib.com manuals search engine

3) Remove the two controller installation screws (a), and raise the controller to remove it. Fig. 4

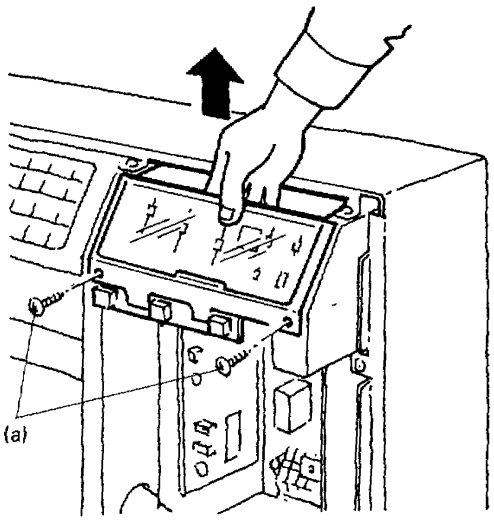

Fig. 4

4) **Cut the clamper bundling the lead wires.** Fig. 5

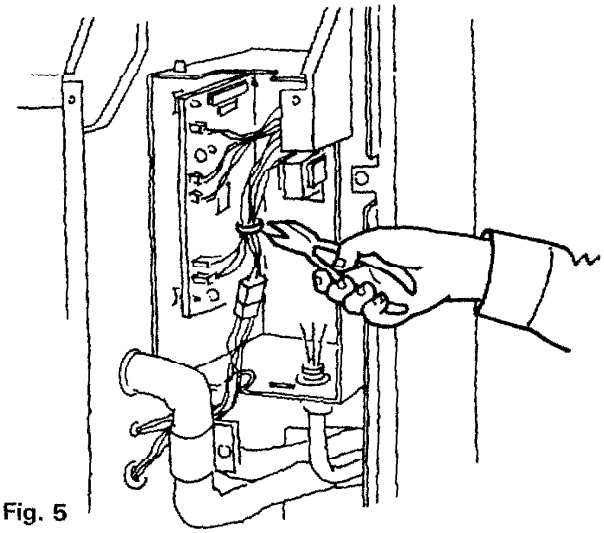

Fig. 5

5) **Separate the connector (a) for the fan motor.**
6) **Pull the heater lead wire (b) from the relay.**
7) **Remove the six unit connection wires (c) from the** terminal board.
8) Remove the conduit lock nut, and then remove the conduit (d).
9) **Remove the two installation screws (e) of the electrical component box, and then remove the electrical component box.** Fig. 6

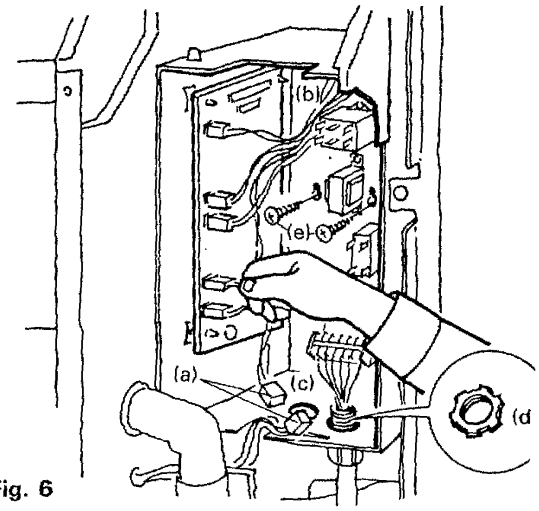

Fig. 6

Downloaded from www.Manualslib.com manuals search engine

10) Remove the lead wires connected to the exchange part. Remove the installation screws of the part. Fig. 7

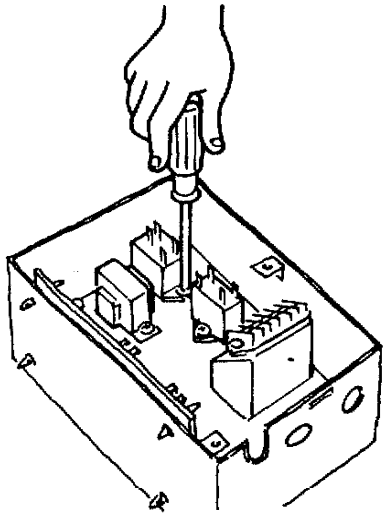

Fig. 7

3. P.C.B. Ass'y — Removal
   1) Disengage the electrical component box from the chassis.
   2) Use radio pliers from the outside of the box to unlock the 5 spacers of the PCB and push them into the box. Fig. 8

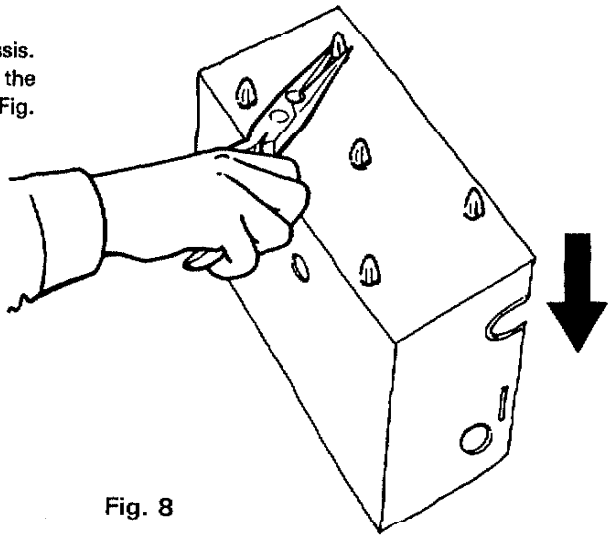

Fig. 8

3) Use radio pliers from the front of the PCB to unlock the spacers, and remove the spacers by pushing them to the rear of the PCB. Fig. 9

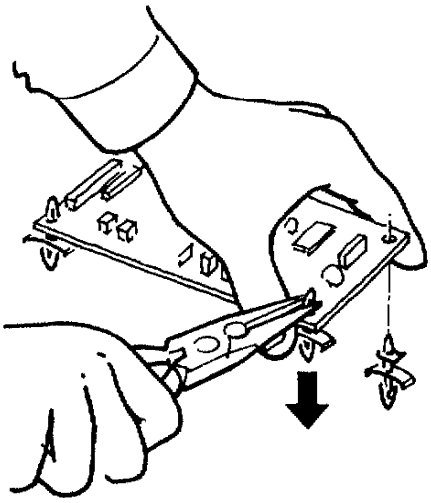

Fig. 9

Downloaded from www.Manualslib.com manuals search engine

4. Evaporator (= Indoor Heat Exchanger) — Removal

1) Remove the two screws (A), and then remove the Evaporator Spacer (a).
2) Remove the three screws (B), and then remove the Evaporator Spacer (b) on the left side.
3) Remove the three screws (C), and then remove the Evaporator Spacer (c) on the right side.
4) Pull the thermistor and the clip (e).
5) Remove the screw (E), and then take off the Pipe Mounting (d).
6) Remove the screw (D), and remove the Evaporator (f) by pulling it to the front. Fig. 10

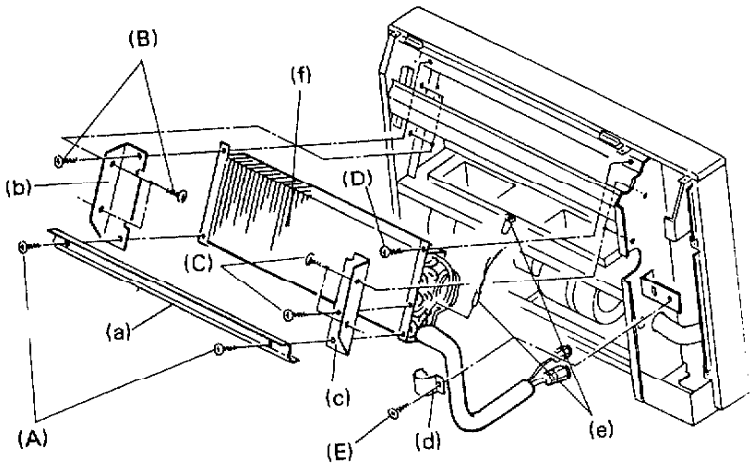

Fig. 10

Downloaded from www.Manualslib.com manuals search engine

5. **Electric Heater — Removal**
   1) **Remove the screws (A) (2 each left and right), and then remove the discharge grille (a).**
   2) Remove the screw (B), and then remove the guard (b).
   3) **Remove the three screws (C), and then remove the guard (c).**
      (Fuse exchange is possible in this condition.)
   4) When the screws (D) (2 each left and right) are removed, the heater assembly (d) can be removed.
   5) **Heater Terminal Protector — Removal**
      a) **The fuse (e) can be exchanged when the two screws (E) have been removed.**
      b) **The thermostat (f) can be exchanged when the two screws (F) and the two lead wires (g) have been removed.** Fig. 11

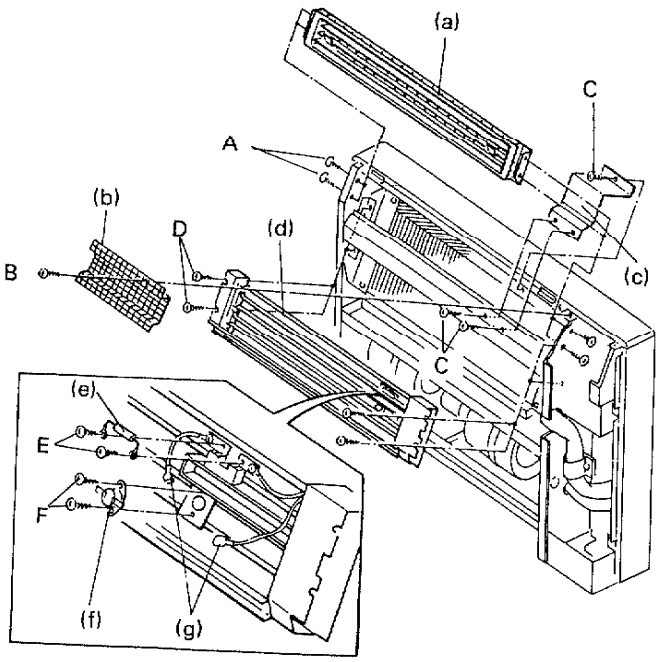

Fig. 11

6. **Fan and Fan Motor — Removal**
   1) Remove the two screws (A), and then remove the mounting plate (a).
   2) Remove the screws (B) (one each left and right), and then remove the reinforcement plate (b).
   3) Remove the bolts (C) (one on the left and two on the right), and then remove the partition plate assembly (c) by pulling it to the front. Fig. 12

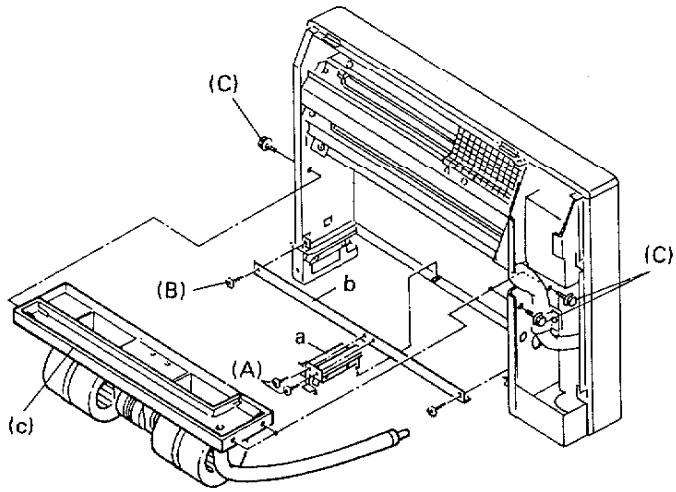

Fig. 12

Downloaded from www.Manualslib.com manuals search engine

4) Remove the casing connection screws (D) (3 each left and right per unit).
5) Remove the casing fixing screws (E) (2 each left and right per unit).
6) Split the casing.
7) Loosen the fan screws (F) (one per unit), and pull the fans.
8) Remove the two motor fixing screws (G), and then remove the motor. Fig. 13

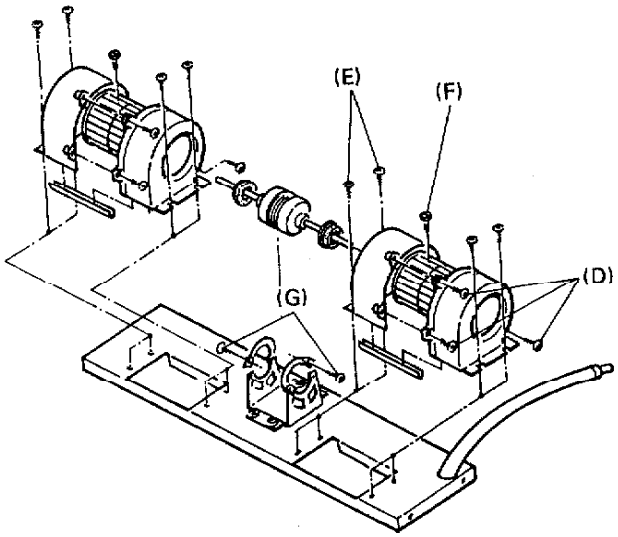

Fig. 13

Downloaded from www.Manualslib.com manuals search engine

OUTDOOR UNIT

7. Casing — Removal

Remove the casing by removing fixing screws using a Phillips screwdriver. Fig. 14, 15

Note: When working only on the wiring, it is possible to gain access to the wiring terminals by simply removing the Access Panel "C".

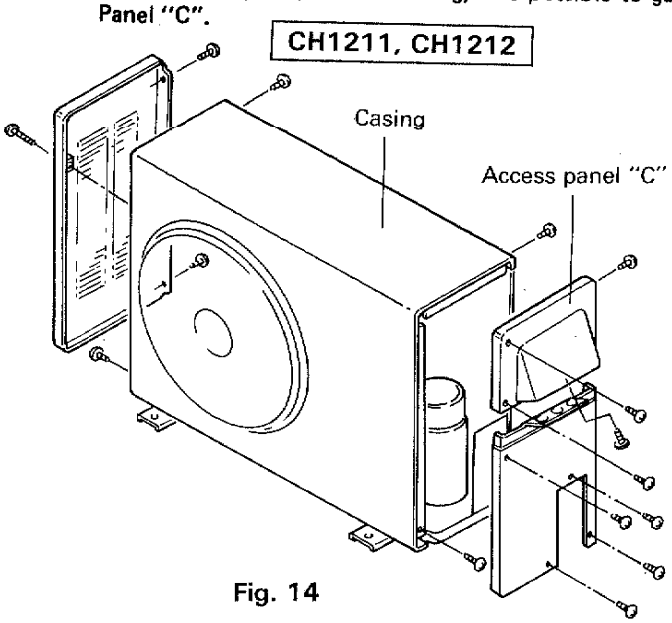

Fig. 14

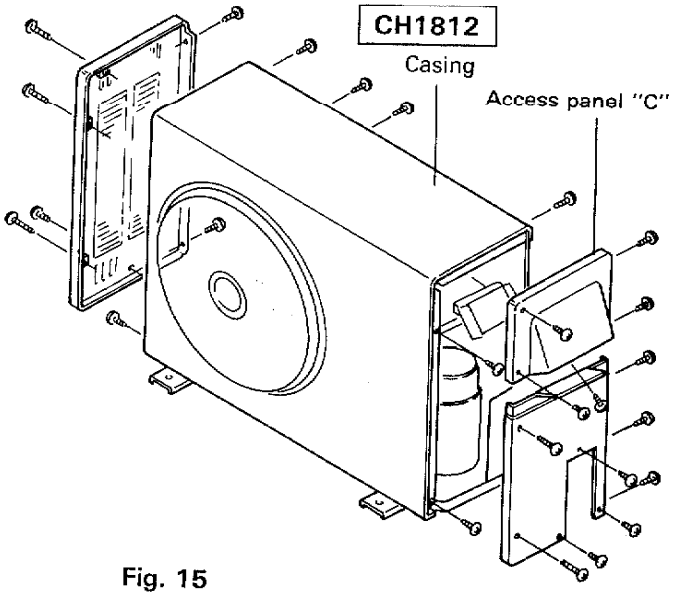

Fig. 15

8. Fan and Fan Motor — Removal

1) Remove the fan by removing the propeller fan fixing screw using a straight blade screwdriver. Refer to Fig. 16, 17

2) Using a pincher, cut the plastic wire ties fixing the fan motor lead wires connected to fan motor capacitor or other terminals.

3) Using a Phillips screwdriver, remove the three fixing screws of the fan motor, then withdraw the fan motor.

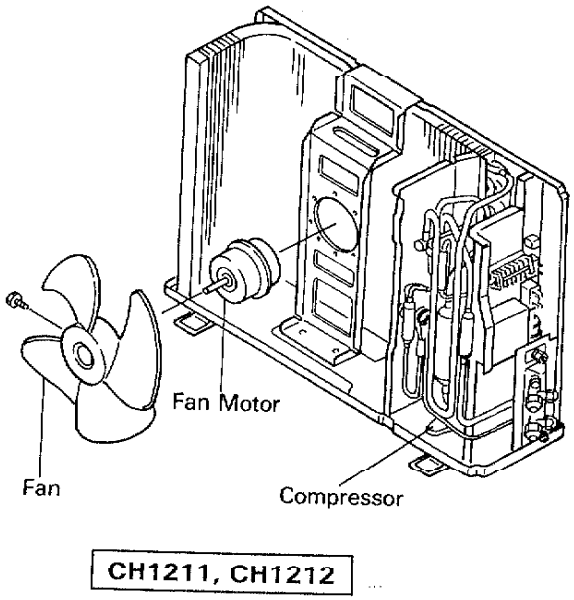

Fig. 16

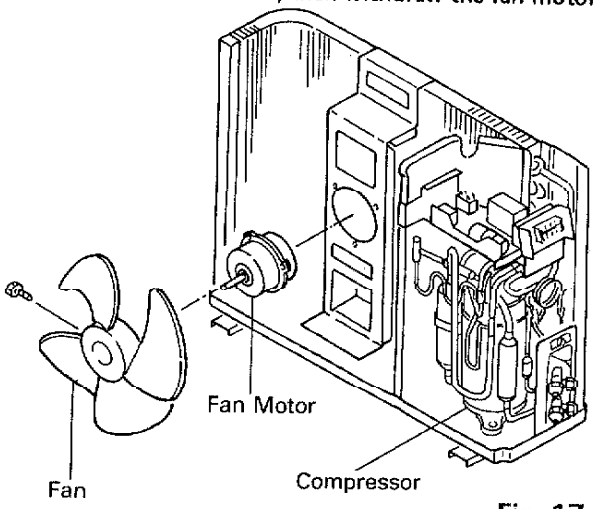

Fig. 17

Downloaded from www.Manualslib.com manuals search engine

14. PARTS LIST

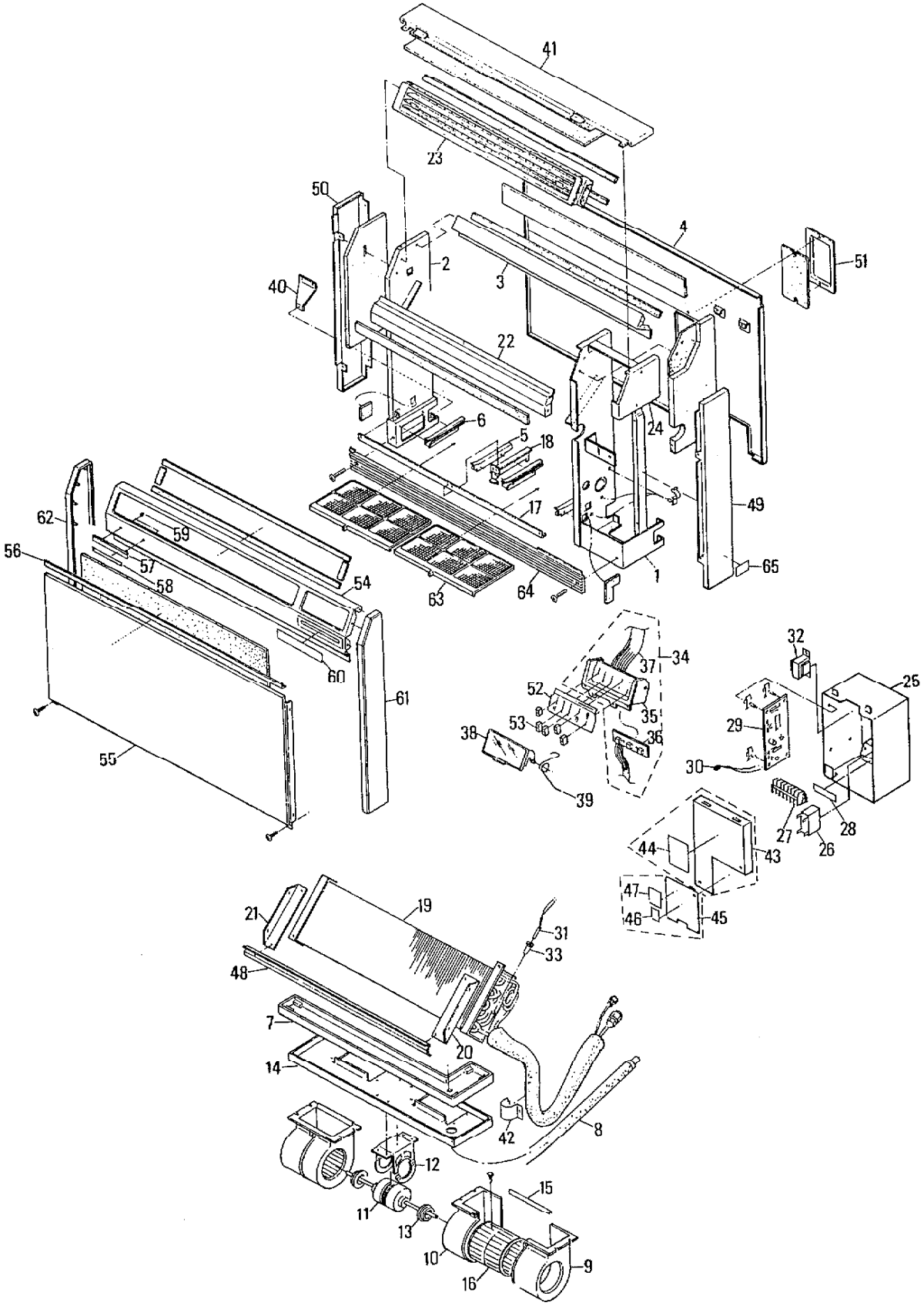

Downloaded from www.Manualslib.com manuals search engine

ATTENTION !
To ensure correct parts supply, please let us know followings, when you make service parts order:
1. Part No. 2. Description 3. Q'ty 4. Volts-Hz-Ph 5. Product Model No.

Key No.	Part No.	Description	Q'ty
1	623 041 1883	Frame Ass'y (R)	1
2	623 041 1807	Frame Ass'y (L)	1
3	623 050 7166	Mounting Plate Ass'y	1
4	623 044 4423	Rear Panel Ass'y	1
5	623 050 3830	Mounting Filter	2
6	623 050 3854	Mounting Filter	2
7	623 041 5805	Drain Pan Ass'y	1
8	623 040 9880	Drain Hose Ass'y	1
9	623 050 6473	Fan Casing	2
10	623 050 6497	Fan Casing	2
11	623 099 7677	Fan Motor Ass'y KFH6T-21A1SP	1
12	623 041 9407	Mounting Plate Ass'y	1
13	623 053 2014	Cushion Rubber, Fan Motor	2
14	623 041 9131	Partition Plate Ass'y	1
15	623 048 9127	Mounting	2
16	623 041 8523	Centrifugal Fan Ass'y	2
17	623 050 1904	Mounting Plate	1
18	623 050 5469	Mounting Plate	1
19	623 042 3077	Evaporator Ass'y	1
20	623 050 7111	Mounting Plate (R)	1
21	623 050 7128	Mounting Plate (L)	1
22	623 050 1881	Mounting Plate Ass'y	1
23	623 041 0473	Grille Ass'y	1
24	623 050 5452	Mounting Plate	1
25	623 043 9177	Elec. Component Box Ass'y	1
26	623 001 1038	Fixed Capacitor 220V 4MFD	1
27	623 003 3047	Terminal Base JTU20-6	1
28	623 060 3561	Label	1
29	623 098 8217	P.C.B. Ass'y POW-FH1212	1
30	623 099 7684	Thermistor Ass'y DCS5K-UL	1
31	623 099 7660	Thermistor Ass'y NTC-51H-S5	1
32	623 100 1632	Transformer Ass'y ATR-J121U1	1
33	623 054 9012	Clip, Wire	1
34	623 099 4195	Switch Ass'y (incl. No. 35~37)	1
35	623 098 8200	Switch Ass'y R3620110A	1
36	623 098 8224	Indicator Lamp Ass'y IND-FH1212	1
37	623 031 1534	Wire Ass'y	1
38	623 044 6007	Cover Plate, Switch	1
39	623 050 7890	Spring	1
40	623 050 8408	Mounting Plate	1
41	623 040 6971	Cabinet Ass'y	1
42	623 051 4768	Mounting, Tube	1
43	623 100 1649	Cover Plate Ass'y (incl. No. 44)	1
44	623 098 8187	Elec. Wiring Diagram	1
45	623 055 3637	Cover Plate Ass'y (incl. No. 46, 47)	1
46	623 084 8269	Label	1
47	623 059 2513	Label	1
48	623 050 7135	Mounting Plate	1
49	623 044 0128	Side Panel (R)	1
50	623 044 0135	Side Panel (L)	1

NOTE: Metal and plastic parts will be supplied basically with necessary heat insulation pads or packing.

Downloaded from www.Manualslib.com manuals search engine

ATTENTION !

To ensure correct parts supply, please let us know followings, when you make service parts order:
1. Part No. 2. Description 3. Q'ty 4. Volts-Hz-Ph 5. Product Model No.

Key No.	Part No.	Description	Q'ty
51	623 050 9368	Cover Plate Ass'y	1
52	623 098 8163	Indicator Plate	1
53	623 033 1860	Knob	5
54	623 044 2887	Top Panel Ass'y	1
55	623 044 3501	Front Panel Ass'y	1
56	623 044 5512	Ornamental Sash	1
57	623 093 5372	Badge	1
58	623 095 2164	Ornament	1
59	623 045 3845	Stopper	2
60	623 098 8156	Ornament	1
61	623 044 2153	Side Panel (R)	1
62	623 044 2177	Side Panel (L)	1
63	623 041 6796	Air Filter Ass'y	2
64	623 047 2624	Grille	1
65	623 098 8170	Name Plate	1
•	623 098 8231	Installation Instructions	1
•	623 098 8248	Operation Manual	1

NOTE: Metal and plastic parts will be supplied basically with necessary heat insulation pads or packing.

■ Accessory Parts

No.	Parts	Figure	Q'ty	No.	Parts	Figure	Q.ty
1	Cover	A (Indoor side)	1	6	Stopper		1
2		B (Outdoor side)	1	7	Non-slip pad		2
3	Wood screw	5.5x25	2	8	Insul. nipple		1
4	Screw	M4x12	2	9	Drain hose adaptor		1
5	Plastic washer		2				
10	Air intake grille						1

Key No.	Part No.	Description	Q'ty
1	623 087 3087	Cover A	1
2	623 051 5536	Cover B	1
3	623 095 2386	Wood Screw 5.5X25	2
4	623 094 7108	Screw M4X12	2
5	623 045 7157	Plastic Washer	2
6	623 045 4200	Stopper	1
7	623 046 7699	Non-slip Pad	2
8	623 052 8031	Insulation Nipple	1
9	623 077 4384	Drain hose Adaptor	1
10	623 047 2624	Air intake Grille	1

Downloaded from www.Manualslib.com manuals search engine

CH1211
OUTDOOR UNIT

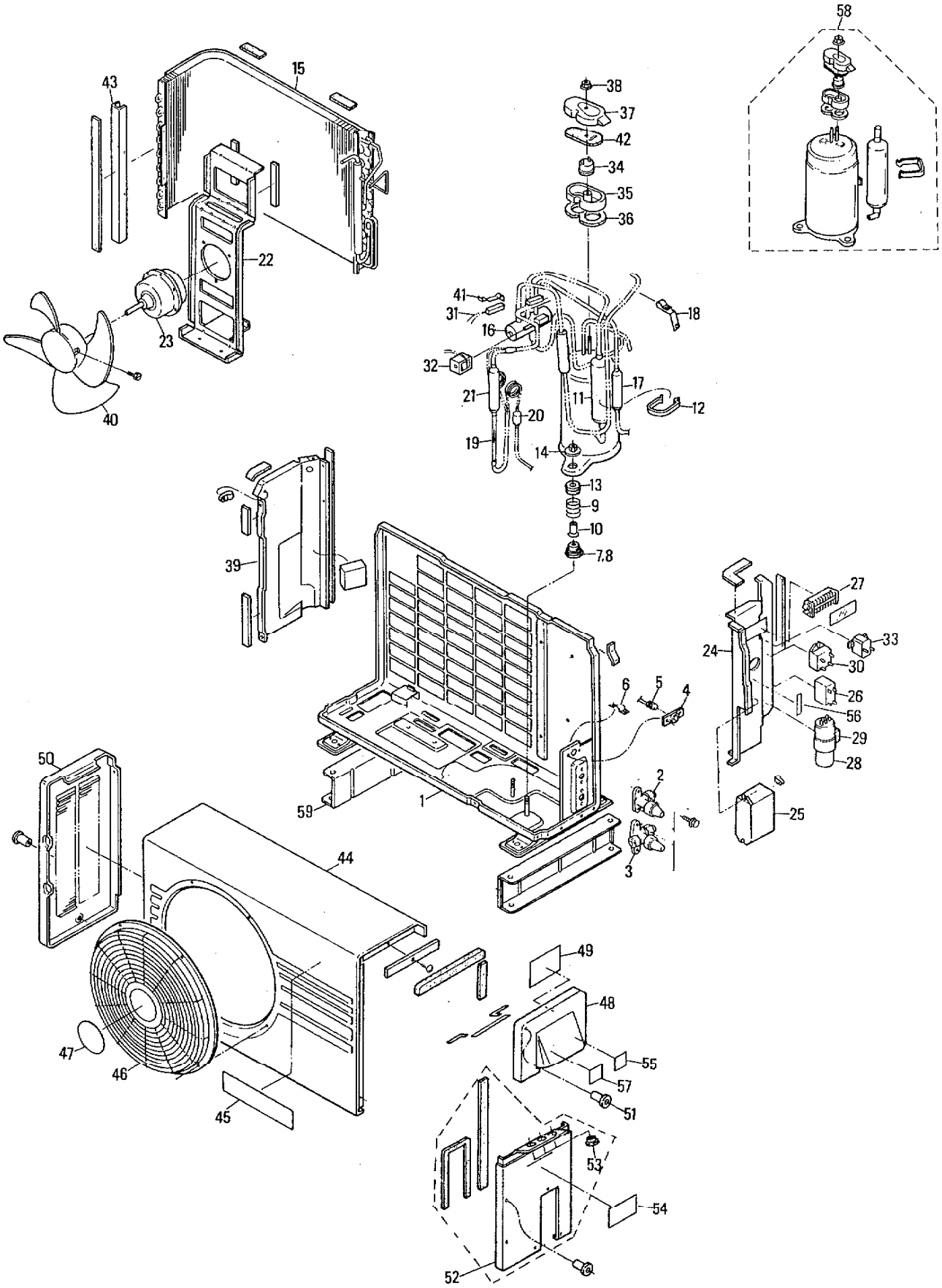

Downloaded from www.Manualslib.com manuals search engine

ATTENTION !

To ensure correct parts supply, please let us know followings, when you make service parts order:

1. Part No. 2. Description 3. Q'ty 4. Volts-Hz-Ph 5. Product Model No.

Key No.	Part No.	Description	Q'ty
1	623 098 1164	Bottom Plate Ass'y	1
2	623 043 2383	Valve Ass'y 1/4 in.	1
3	623 043 1966	Valve Ass'y 1/2 in.	1
4	623 050 4721	Mounting Plate	1
5	623 043 6022	Nipple Ass'y	1
6	623 051 4867	Mounting, Tube	1
7	623 035 0113	Cushion Rubber	1
8	623 035 0052	Cushion Rubber	2
9	623 034 5799	Spring	3
10	623 031 9875	Stopper	3
11	623 043 6619	Accumulator Ass'y	1
12	623 034 9452	Band Mounting	1
13	623 035 0106	Cushion Rubber	3
14	623 029 6534	Nut Special Ass'y	3
15	623 097 2254	Condenser Ass'y	1
16	623 091 5336	Reversing Valve Ass'y V26 9100	1
17	623 054 4772	Muffler	1
18	623 051 4850	Mounting, Tube	1
19	623 070 8938	Check Valve Ass'y	1
20	623 030 1764	Strainer Ass'y	1
21	623 097 2292	Dehydrater Ass'y	1
22	623 051 3112	Mounting Plate Ass'y, Fan Motor	1
23	623 098 3618	Fan Motor Ass'y FT6-21C1PE	1
24	623 055 0957	Elec. Component Box Ass'y	1
25	623 097 2322	P.C.B. Ass'y POW-C92GH	1
26	623 001 1069	Fixed Capacitor 220V 8MFD	1
27	623 003 3054	Terminal Base JTU20-8	1
28	623 001 2196	Fixed Capacitor 330V 35MFD	1
29	623 054 8022	Clip, Capacitor	1
30	623 002 4762	Relay DFU24D1-F(M)	1
31	623 002 9194	Thermostat TRS-12M160UL	1
32	623 100 1700	Solenoid LB19003	1
33	626 100 0070	Thermistor PS2A E20-470	1
34	626 100 0872	Relay MRA98693-9200	1
35	626 040 0680	Cover Terminal	1
36	626 040 0291	Gasket Terminal	1
37	626 040 0802	Cap Terminal Cover	1
38	626 040 0956	Nut, Compressor	1
39	623 089 2880	Partition Plate Ass'y	1
40	623 041 8344	Propeller Fan Ass'y	1
41	623 054 8435	Mounting Thermostat	1
42	626 040 0482	Cover Gasket	1
43	623 097 2346	Cover Ass'y	1
44	623 044 0722	Cabinet Ass'y	1
45	623 089 0367	Mark	1
46	623 040 9682	Guard Ass'y	1
47	623 090 7553	Mark	1
48	623 040 8678	Side Panel Ass'y	1
49	623 100 1717	Elec. Wiring Diagram	1
50	623 040 8562	Side Panel Ass'y	1

NOTE: Metal and plastic parts will be supplied basically with necessary heat insulation pads or packing.

Downloaded from www.Manualslib.com manuals search engine

ATTENTION !

To ensure correct parts supply, please let us know followings, when you make service parts order:

1. Part No. 2. Description 3. Q'ty 4. Volts-Hz-Ph 5. Product Model No.

Key No.	Part No.	Description	Q'ty
51	623 050 7593	Spacer	3
52	623 040 8685	Side Panel Ass'y (incl. No. 53)	1
53	623 038 3432	Bushing	3
54	623 100 1724	Name Plate	1
55	623 084 8269	Label	1
56	623 060 3561	Label	1
57	623 059 2513	Label	1
58	623 096 5911	Compressor Ass'y C-R91H2Q	1
59	623 099 5932	Leg Pedestal	2

NOTE: Metal and plastic parts will be supplied basically with necessary heat insulation pads or packing.

Downloaded from www.Manualslib.com manuals search engine

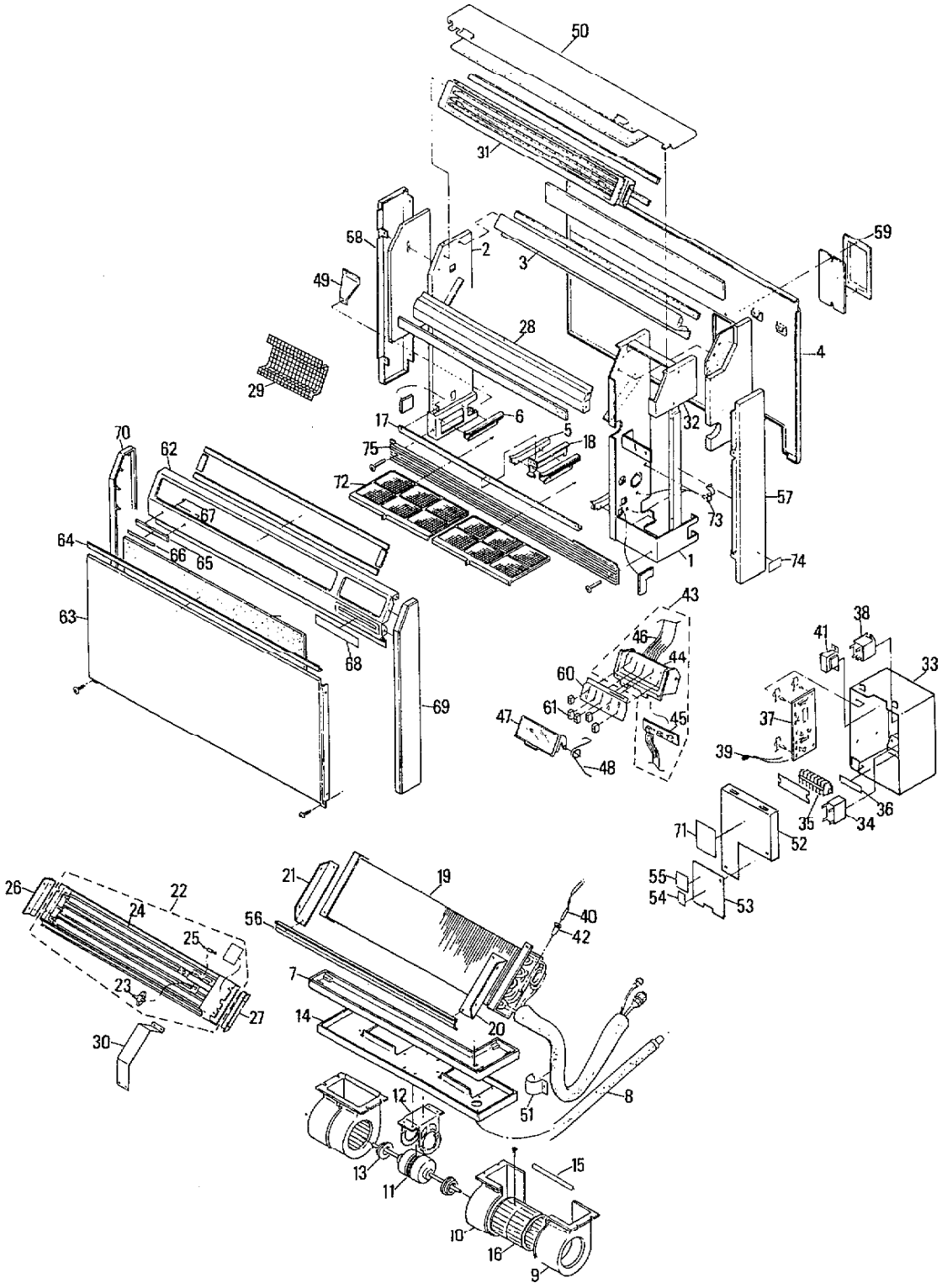

Downloaded from www.Manualslib.com manuals search engine

ATTENTION !

To ensure correct parts supply, please let us know followings, when you make service parts order:

1. Part No. 2. Description 3. Q'ty 4. Volts-Hz-Ph 5. Product Model No.

Key No.	Part No.	Description	Q'ty
1	623 041 1883	Frame Ass'y (R)	1
2	623 041 1807	Frame Ass'y (L)	1
3	623 050 7166	Mounting Plate Ass'y	1
4	623 044 4423	Rear Panel Ass'y	1
5	623 050 3830	Mounting Filter	2
6	623 050 3854	Mounting Filter	2
7	623 041 5805	Drain Pan Ass'y	1
8	623 040 9880	Drain Hose Ass'y	1
9	623 050 6473	Fan Casing	2
10	623 050 6497	Fan Casing	2
11	623 099 4157	Fan Motor Ass'y KFH6T-21A6SP	1
12	623 041 9407	Mounting Plate Ass'y	1
13	623 053 2014	Cushion Rubber, Fan Motor	2
14	623 041 9148	Partition Plate Ass'y	1
15	623 048 9127	Mounting	2
16	623 041 8523	Centrifugal Fan Ass'y	2
17	623 050 1904	Mounting Plate	1
18	623 050 5469	Mounting Plate	1
19	623 099 4225	Evaporator Ass'y	1
20	623 050 7111	Mounting Plate (R)	1
21	623 050 7128	Mounting Plate (L)	1
22	623 008 6661	Panel Heater AH-122FH (incl. No. 23~25)	1
23	623 002 9378	Thermostat INT01L0606	1
24	623 003 6833	Heater 230V 1KW	3
25	623 030 8336	Fuse Ass'y SF129U	1
26	623 050 5582	Mounting Plate (L)	1
27	623 050 5599	Mounting Plate (R)	1
28	623 050 1881	Mounting Plate Ass'y	1
29	623 045 8062	Guard	1
30	623 045 8079	Guard	1
31	623 041 0473	Grille Ass'y	1
32	623 050 5452	Mounting Plate	1
33	623 043 9177	Elec. Component Box Ass'y	1
34	623 001 1793	Fixed Capacitor 440V 1MFD	1
35	623 003 3047	Terminal Base JTU20-6	1
36	623 060 3561	Label	1
37	623 098 8217	P.C.B. Ass'y POWO-FH1212	1
38	623 002 4397	Relay G4E-2123T-US	1
39	623 099 4164	Thermistor Ass'y DCS5K-UL	1
40	623 099 4171	Thermistor Ass'y NTC-51H-S5	1
41	623 099 4188	Transformer Ass'y ATR-J122U	1
42	623 054 9012	Clip, Wire	1
43	623 099 4195	Switch Ass'y (Incl. No. 44~46)	1
44	623 098 8200	Switch Ass'y RR3620110A	1
45	623 098 8224	Indicator Lamp Ass'y IND-FH1212	1
46	623 031 1534	Wire Ass'y	1
47	623 044 6007	Cover Plate, Switch	1
48	623 050 7890	Spring	1
49	623 050 8408	Mounting Plate	1
50	623 040 6971	Cabinet Ass'y	1

NOTE: Metal and plastic parts will be supplied basically with necessary heat insulation pads or packing.

Downloaded from www.Manualslib.com manuals search engine

ATTENTION !

To ensure correct parts supply, please let us know followings, when you make service parts order:

1. Part No. 2. Description 3. Q'ty 4. Volts-Hz-Ph 5. Product Model No.

Key No.	Part No.	Description	Q'ty
51	623 051 4768	Mounting, Tube	1
52	623 055 3620	Cover Plate	1
53	623 099 4201	Cover Plate Ass'y (incl. No. 54, 55)	1
54	623 084 8269	Label	1
55	623 059 2582	Label	1
56	623 050 7135	Mounting Plate	1
57	623 044 0128	Side Panel (R)	1
58	623 044 0135	Side Panel (L)	1
59	623 050 9368	Cover Plate Ass'y	1
60	623 098 8163	Indicator Plate	1
61	623 033 1860	Knob	5
62	623 044 2887	Top Panel Ass'y	1
63	623 044 3501	Front Panel Ass'y	1
64	623 044 5512	Ornamental Sash	1
65	623 093 5372	Badge	1
66	623 093 5389	Ornament	1
67	623 045 3845	Stopper	2
68	623 098 8156	Ornament	1
69	623 044 2153	Side Panel (R)	1
70	623 044 2177	Side Panel (L)	1
71	623 098 8262	Elec. Wiring Diagram	1
72	623 041 6796	Air Filter Ass'y	2
73	623 038 0752	Clip, Wire	2
74	623 098 8255	Name Plate	1
75	623 047 2624	Grille	1
•	623 098 8231	Installation Instructions	1
•	623 098 8248	Operation Manual	1

NOTE: Metal and plastic parts will be supplied basically with necessary heat insulation pads or packing.

■ Accessory Parts

No.	Parts	Figure	Q'ty	No.	Parts	Figure	Q.ty
1	Cover	A (Indoor side)	1	6	Stopper		1
2		B (Outdoor side)	1	7	Non-slip pad		2
3	Wood screw		2	8	Insul. nipple		1
4	Screw	5.5x25	2	9	Drain hose adaptor		1
5	Plastic washer	M4x12	2				
10	Air intake grille						1

Key No.	Part No.	Description	Q'ty
1	623 087 3087	Cover A	1
2	623 051 5536	Cover B	1
3	623 095 2386	Wood Screw 5.5X25	2
4	623 094 7108	Screw M4X12	2
5	623 045 7157	Plastic Washer	2
6	623 045 4200	Stopper	1
7	623 046 7699	Non-slip Pad	2
8	623 052 8031	Insulation Nipple	1
9	623 077 4384	Drain hose Adaptor	1
10	623 047 2624	Air intake Grille	1

Downloaded from www.Manualslib.com manuals search engine

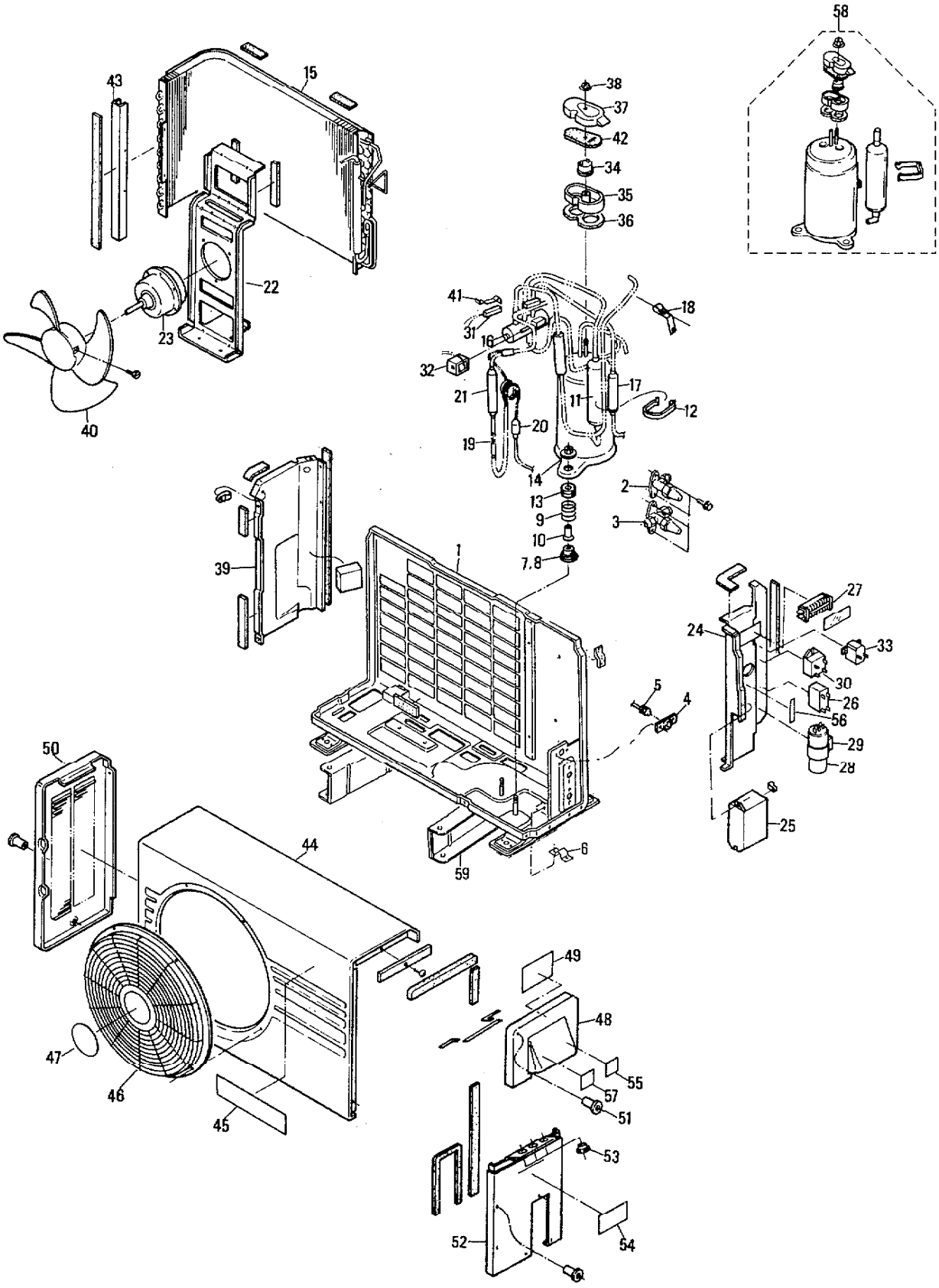

Downloaded from www.Manualslib.com manuals search engine

ATTENTION !

To ensure correct parts supply, please let us know followings, when you make service parts order:

1. Part No. 2. Description 3. Q'ty 4. Volts-Hz-Ph 5. Product Model No.

Key No.	Part No.	Description	Q'ty
1	623 098 1164	Bottom Plate Ass'y	1
2	623 043 2383	Valve Ass'y 1/4 in.	1
3	623 043 1966	Valve Ass'y 1/2 in.	1
4	623 050 4721	Mounting Plate	1
5	623 043 6022	Nipple Ass'y	1
6	623 051 4867	Mounting, Tube	1
7	623 035 0113	Cushion Rubber	1
8	623 035 0052	Cushion Rubber	2
9	623 034 5799	Spring	3
10	623 031 9875	Stopper	3
11	623 043 6619	Accumulator Ass'y	1
12	623 034 9452	Band Mounting	1
13	623 035 0106	Cushion Rubber	3
14	623 029 6534	Nut Special Ass'y M6	3
15	623 097 2254	Condenser Ass'y	1
16	623 091 5336	Reversing Valve Ass'y V26 9100	1
17	623 054 4772	Muffler	1
18	623 051 4850	Mounting, Tube	1
19	623 070 8938	Check Valve Ass'y	1
20	623 030 1764	Strainer Ass'y	1
21	623 097 2292	Dehydrater Ass'y	1
22	623 051 3105	Mounting Plate Ass'y, Fan Motor	1
23	623 097 2308	Fan Motor Ass'y FT6-21E6P	1
24	623 055 0957	Elec. Component Box Ass'y	1
25	623 097 2322	P.C.B. Ass'y POW-C92GH	1
26	623 001 1823	Fixed Capacitor 440V 2.5MFD	1
27	623 003 3092	Terminal Base JTU30-8	1
28	623 097 2339	Fixed Capacitor 370V 20MFD	1
29	623 038 0349	Clip, Capacitor	1
30	623 002 4762	Relay DFU24D1-F(M)	1
31	623 002 9194	Thermostat TRS-12M160UL	1
32	623 095 6711	Solenoid LB19007	1
33	626 100 0049	Thermistor TDK 101YV	1
34	626 100 1152	Relay MST00AKU9200	1
35	626 040 0680	Cover Terminal	1
36	626 040 0291	Gasket Terminal	1
37	626 040 0802	Cap Terminal Cover	1
38	626 040 0956	Nut, Compressor	1
39	623 089 2880	Partition Plate Ass'y	1
40	623 041 8844	Propeller Fan Ass'y	1
41	623 054 8435	Mounting Thermostat	1
42	626 040 0482	Cover Gasket	1
43	623 097 2346	Cover Ass'y	1
44	623 044 0722	Cabinet Ass'y	1
45	623 089 0367	Mark	1
46	623 040 9682	Guard Ass'y	1
47	623 090 7553	Mark	1
48	623 040 8678	Side Panel Ass'y	1
49	623 097 2353	Elec. Wiring Diagram	1
50	623 040 8562	Side Panel Ass'y	1

NOTE: Metal and plastic parts will be supplied basically with necessary heat insulation pads or packing.

Downloaded from www.Manualslib.com manuals search engine

ATTENTION !

To ensure correct parts supply, please let us know followings, when you make service parts order:

1. Part No. 2. Description 3. Q'ty 4. Volts-Hz-Ph 5. Product Model No.

Key No.	Part No.	Description	Q'ty
51	623 050 7593	Spacer	3
52	623 040 8685	Side Panel Ass'y	1
53	623 038 3432	Bushing	3
54	623 097 2360	Name Plate	1
55	623 084 8269	Label	1
56	623 060 3561	Label	1
57	623 059 2582	Label	1
58	623 097 2377	Compressor Ass'y C-91H6Q	1
59	623 099 5932	Leg Pedestal	2

NOTE: Metal and plastic parts will be supplied basically with necessary heat insulation pads or packing.

Downloaded from www.Manualslib.com manuals search engine

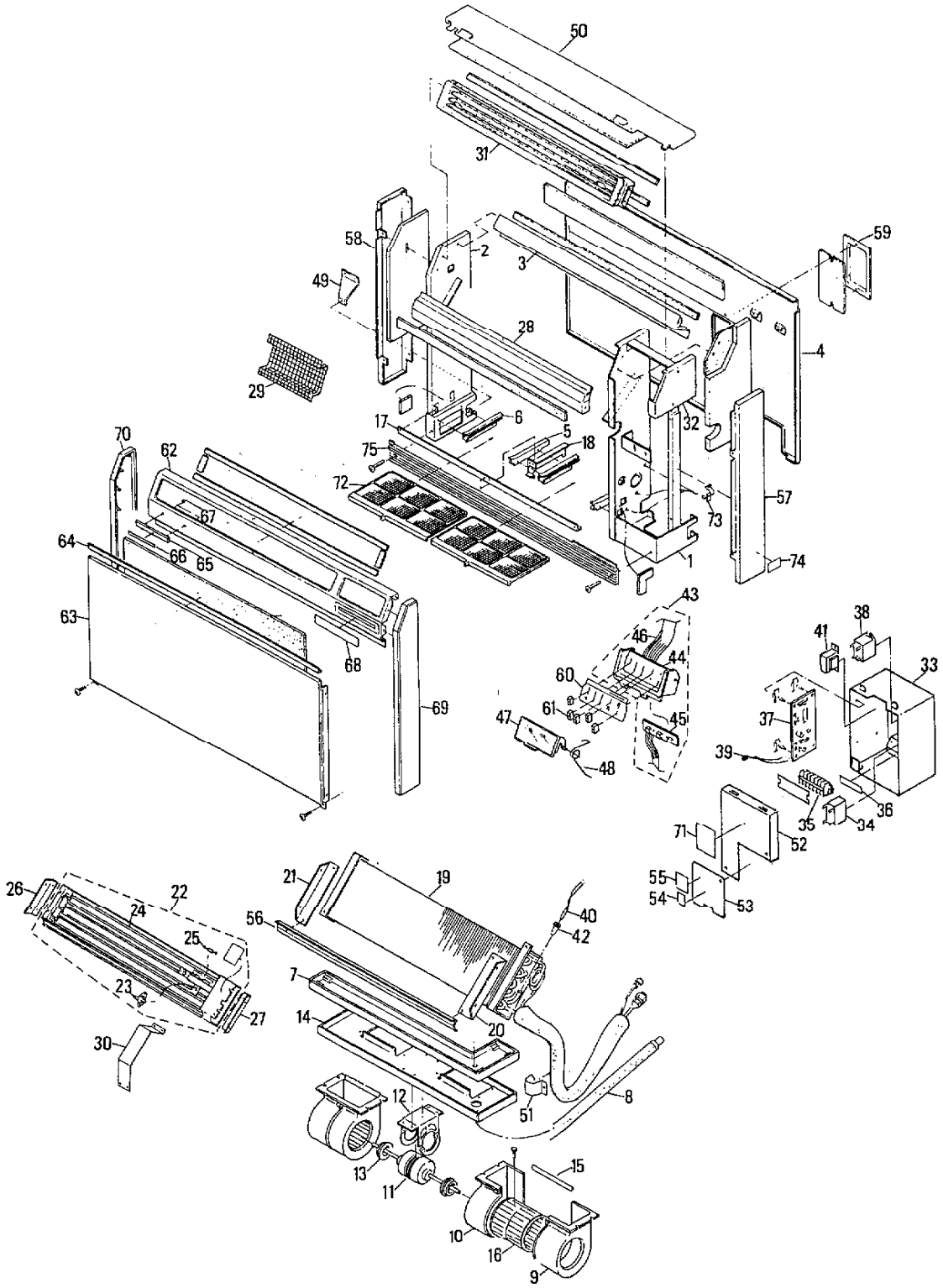

Downloaded from www.Manualslib.com manuals search engine

ATTENTION !

To ensure correct parts supply, please let us know followings, when you make service parts order:

1. Part No. 2. Description 3. Q'ty 4. Volts-Hz-Ph 5. Product Model No.

Key No.	Part No.	Description	Q'ty
1	623 041 1883	Frame Ass'y (R)	1
2	623 041 1807	Frame Ass'y (L)	1
3	623 050 7166	Mounting Plate Ass'y	1
4	623 044 4423	Rear Panel Ass'y	1
5	623 050 3830	Mounting Filter	2
6	623 050 3854	Mounting Filter	2
7	623 041 5805	Drain Pan Ass'y	1
8	623 040 9880	Drain Hose Ass'y	1
9	623 050 6473	Fan Casing	2
10	623 050 6497	Fan Casing	2
11	623 099 4218	Fan Motor Ass'y KFH4T-31D6P	1
12	623 041 9407	Mounting Plate Ass'y	1
13	623 053 2014	Cushion Rubber, Fan Motor	2
14	623 041 9148	Partition Plate Ass'y	1
15	623 048 9127	Mounting	2
16	623 041 8523	Centrifugal Fan Ass'y	2
17	623 050 1904	Mounting Plate	1
18	623 050 5469	Mounting Plate	1
19	623 099 4232	Evaporator Ass'y	1
20	623 050 7111	Mounting Plate (R)	1
21	623 050 7128	Mounting Plate (L)	1
22	623 098 8316	Panel Heater AH-FH1812 (incl. No. 23~25)	1
23	623 002 9378	Thermostat INT01L0606	1
24	623 098 8323	Heater 230V 1.2KW	3
25	623 030 8336	Fuse Ass'y SF129U	1
26	623 050 5582	Mounting Plate (L)	1
27	623 050 5599	Mounting Plate (R)	1
28	623 050 1881	Mounting Plate Ass'y	1
29	623 045 8062	Guard	1
30	623 045 8079	Guard	1
31	623 041 0473	Grille Ass'y	1
32	623 050 5452	Mounting Plate	1
33	623 043 9177	Elec. Component Box Ass'y	1
34	623 001 1809	Fixed Capacitor 440V 1.5MFD	1
35	623 003 3047	Terminal Base JTU20-6	1
36	623 060 3561	Label	1
37	623 099 5956	P.C.B. Ass'y POW-FH1812	1
38	623 002 4397	Relay G4E-2123T-US	1
39	623 099 4164	Thermistor Ass'y OCS5K-UL	1
40	623 099 4171	Thermistor Ass'y NTC-51H-S5	1
41	623 099 4188	Transformer Ass'y ATR-J122U	1
42	623 054 9012	Clip, Wire	1
43	623 099 4195	Switch Ass'y (incl. No. 44~46)	1
44	623 098 8200	Switch Ass'y R3620110A	1
45	623 098 8224	Indicator Lamp Ass'y IND-FH1212	1
46	623 031 1534	Wire Ass'y	1
47	623 044 6007	Cover Plate, Switch	1
48	623 050 7890	Spring	1
49	623 050 8408	Mounting Plate	1
50	623 040 6971	Cabinet Ass'y	1

NOTE: Metal and plastic parts will be supplied basically with necessary heat insulation pads or packing.

Downloaded from www.Manualslib.com manuals search engine

ATTENTION !

To ensure correct parts supply, please let us know followings, when you make service parts order:

1. Part No. 2. Description 3. Q'ty 4. Volts-Hz-Ph 5. Product Model No.

Key No.	Part No.	Description	Q'ty
51	623 051 4768	Mounting, Tube	1
52	623 055 3620	Cover Plate	1
53	623 099 4201	Cover Plate Ass'y (incl. No. 54, 55)	1
54	623 084 8269	Label	1
55	623 059 2582	Label	1
56	623 050 7135	Mounting Plate	1
57	623 044 0128	Side Panel (R)	1
58	623 044 0135	Side Panel (L)	1
59	623 050 9368	Cover Plate Ass'y	1
60	623 098 8163	Indicator Plate	1
61	623 033 1860	Knob	5
62	623 044 2887	Top Panel Ass'y	1
63	623 044 3501	Front Panel Ass'y	1
64	623 044 5512	Ornamental Sash	1
65	623 093 5372	Badge	1
66	623 093 5389	Ornament	1
67	623 045 3845	Stopper	2
68	623 098 8156	Ornament	1
69	623 044 2153	Side Panel (R)	1
70	623 044 2177	Side Panel (L)	1
71	623 098 8309	Elec. Wiring Diagram	1
72	623 041 6796	Air Filter Ass'y	2
73	623 038 0752	Clip, Wire	2
74	623 098 8293	Name Plate	1
75	623 047 2624	Grille	1
•	623 098 8231	Installation Instructions	1
•	623 098 8248	Operation Manual	1

NOTE: Metal and plastic parts will be supplied basically with necessary heat insulation pads or packing.

■ Accessory Parts

No.	Parts	Figure	Q'ty	No.	Parts	Figure	Q.ty
1	Cover	A (Indoor side)	1	6	Stopper		1
2		B (Outdoor side)	1	7	Non-slip pad		2
3	Wood screw		2	8	Insul. nipple		1
4	Screw	5.5x25	2	9	Drain hose adaptor		1
5	Plastic washer	M4x12	2				
10	Air intake grille						1

Key No.	Part No.	Description	Q'ty
1	623 087 3087	Cover A	1
2	623 051 5536	Cover B	1
3	623 095 2386	Wood Screw 5.5X25	2
4	623 094 7108	Screw M4X12	2
5	623 045 7157	Plastic Washer	2
6	623 045 4200	Stopper	1
7	623 046 7699	Non-slip Pad	2
8	623 052 8031	Insulation Nipple	1
9	623 077 4384	Drain hose Adaptor	1
10	623 047 2624	Air intake Grille	1

Downloaded from www.Manualslib.com manuals search engine

CH1812
OUTDOOR UNIT

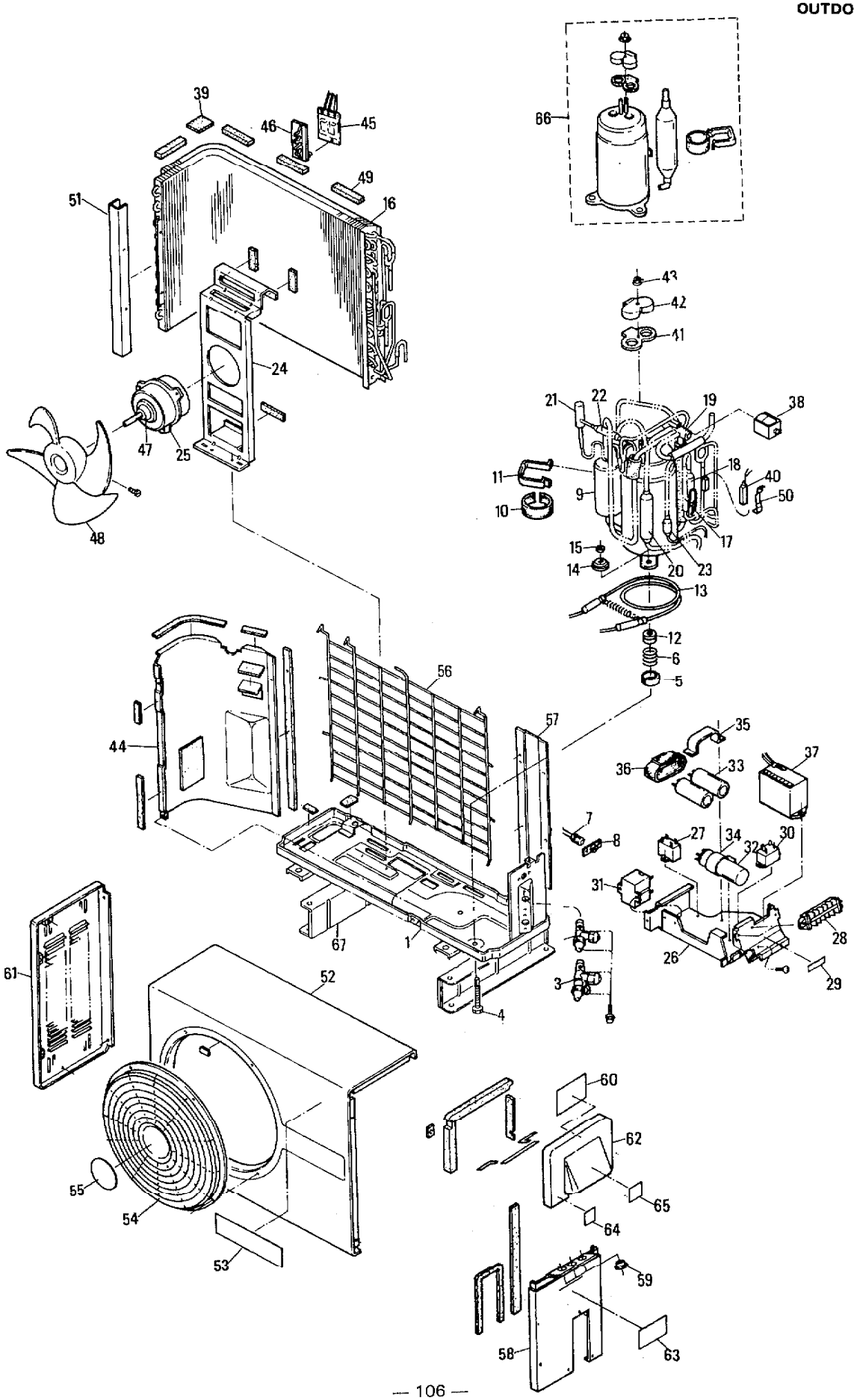

Downloaded from www.Manualslib.com manuals search engine

ATTENTION !

To ensure correct parts supply, please let us know followings, when you make service parts order:

1. Part No. 2. Description 3. Q'ty 4. Volts-Hz-Ph 5. Product Model No.

Key No.	Part No.	Description	Q'ty
1	623 098 0815	Bottom Plate Ass'y	1
2	623 043 2062	Valve Ass'y 1/4 in.	1
3	623 097 5156	Valve Ass'y 1/2 in.	1
4	623 051 7264	Bolt Special	3
5	623 035 0144	Cushion Rubber	3
6	623 034 5836	Spring	3
7	623 043 6008	Nipple Ass'y	1
8	623 050 4721	Mounting Plate	1
9	623 043 6466	Accumulator Ass'y	1
10	623 050 9795	Packing	1
11	623 051 3372	Band Mounting	1
12	623 035 0137	Cushion Rubber	3
13	623 097 5026	Heater Ass'y 230V 30W	1
14	623 051 7172	Washer Special	3
15	623 090 6914	Nut	3
16	623 097 4944	Condenser Ass'y	1
17	623 070 8921	Check Valve Ass'y	1
18	623 043 3700	Dehydrater Ass'y	1
19	623 091 5336	Reversing Valve Ass'y V26 9100	1
20	623 098 1997	Muffler	1
21	623 043 0990	Discharge Pres. Regulator Ass'y	1
22	623 098 2000	Muffler	1
23	623 043 4219	Strainer Ass'y	1
24	623 051 3204	Mounting Plate Ass'y, Fan Motor	1
25	623 097 4999	Fan Motor Ass'y SG6S-51C6P	1
26	623 043 9276	Elec. Component Box Ass'y	1
27	623 001 1816	Fixed Capacitor 440V 2MFD	1
28	623 003 3092	Terminal Base JTU30-8	1
29	623 060 3561	Label	1
30	623 002 4793	Relay DFU24D1F	1
31	626 100 1503	Relay AMVL300A	1
32	623 001 2530	Fixed Capacitor 400V 35MFD	1
33	626 120 0746	Fixed Capacitor 160V 100MFD	2
34	623 054 8022	Clip, Capacitor	1
35	623 089 3672	Clip, Capacitor	1
36	623 089 3122	Packing	1
37	623 097 2322	P.C.B. Ass'y POW-C92GH	1
38	623 098 0839	Solenoid Ass'y LB19007	1
39	623 051 2658	Packing	1
40	623 097 5170	Thermostat Ass'y TRS-12M160UL	1
41	626 040 0338	Gasket Terminal	1
42	626 040 0673	Cover Terminal	1
43	626 040 0956	Nut, Compressor	1
44	623 041 4846	Partition Plate Ass'y	1
45	623 097 5187	Thermostat Ass'y MQT5SW	1
46	623 054 8572	Mounting Thermostat	1
47	623 053 2496	Cover Rubber	1
48	623 041 8752	Propeller Fan Ass'y	1
49	623 051 1514	Packing	4
50	623 054 8435	Mounting Thermostat	1

NOTE: Metal and plastic parts will be supplied basically with necessary heat insulation pads or packing.

Downloaded from www.Manualslib.com manuals search engine

ATTENTION !

To ensure correct parts supply, please let us know followings, when you make service parts order:

1. Part No. 2. Description 3. Q'ty 4. Volts-Hz-Ph 5. Product Model No.

Key No.	Part No.	Description	Q'ty
51	623 051 5642	Cover	1
52	623 044 0845	Cabinet	1
53	623 089 0367	Mark	1
54	623 040 9682	Guard Ass'y	1
55	623 090 7553	Mark	1
56	623 040 9651	Guard Ass'y	1
57	623 044 4591	Rear Panel	1
58	623 040 8647	Side Panel Ass'y	1
59	623 038 3432	Bushing	3
60	623 097 4968	Elec. Wiring Diagram	1
61	623 040 8388	Side Panel Ass'y	1
62	623 040 8630	Side Panel Ass'y	1
63	623 098 0853	Name Plate	1
64	623 084 8269	Label	1
65	623 059 2582	Label	1
66	623 096 5928	Compressor Ass'y C-2R140H6S	1
67	623 099 5949	Leg Pedestal	2

NOTE: Metal and plastic parts will be supplied basically with necessary heat insulation pads or packing.

Downloaded from www.Manualslib.com manuals search engine