TOSHIBA

FILE NO. A05-010

SERVICE MANUAL

AIR-CONDITIONER
SPLIT TYPE

Heat Pump Model	Cooling Only Model
RAS-M10GDV-E	***RAS-M10GDCV-E***
RAS-M13GDV-E	***RAS-M13GDCV-E***
RAS-M16GDV-E	***RAS-M16GDCV-E***

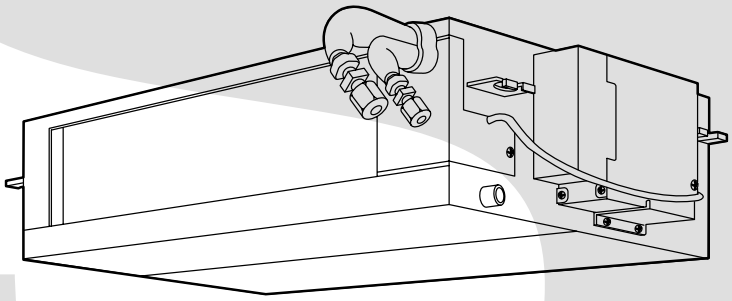

HFC

R410A

PRINTED IN JAPAN, Nov., 2005 ToMo

Downloaded from www.Manualslib.com manuals search engine

CONTENTS

1. PRECAUTIONS FOR SAFETY 3
2. SPECIFICATIONS 5
3. CONSTRUCTION VIEWS 8
4. WIRING DIAGRAM 9
5. SPECIFICATIONS OF ELECTRICAL PARTS 10
6. REFRIGERANT CYCLE DIAGRAM 11
7. CONTROL BLOCK DIAGRAM 12
8. OPERATION DESCRIPTION 13
9. INSTALLATION PROCEDURE 23
10. DRAIN-UP KIT (OPTION) 38
11. HOW TO DIAGNOSE THE TROUBLE 42
12. HOW TO REPLACE THE MAIN PARTS 53
13. EXPLODED VIEWS AND PARTS LIST 55

Downloaded from www.Manualslib.com manuals search engine

1. PRECAUTIONS FOR SAFETY

For general public use

Power supply cord of Outdoor unit shall be more than 2.5mm² (H07RN-F or 245 IEC66) polychloroprene sheathed flexible cord.

- Read this “Precautions for Safety” carefully before servicing.
- The precautions described below include the important items regarding safety. Observe them without fail.
- After the servicing work, perform a trial operation to check for any problem.
- Turn off the main power supply switch (or breaker) before the unit maintenance.

CAUTION **New Refrigerant Air Conditioner Servicing**

- **THIS AIR CONDITIONER ADOPTS THE NEW HFC REFRIGERANT (R410A) WHICH DOES NOT DESTROY OZONE LAYER.**

The characteristics of R410A refrigerant is easy to absorb water, oxidizing membrane or oil, and its pressure is approx. 1.6 times of refrigerant R22. Accompanied with adoption of the new refrigerant, refrigerating oil has been also changed. Therefore, during servicing work, be sure that water, dust, former refrigerant, or refrigerating oil does not enter into the refrigerating cycle of new refrigerant air conditioner.

To prevent from mixing of refrigerant and refrigerating oil, the sizes of connecting sections of charging port of the main unit or installation tools are different from those for the conventional refrigerant.

Accordingly, the exclusive tools are required for the new refrigerant (R410A).

For connecting pipes, use new and clean piping materials with high pressure-tight force, which were made for R410A only, so that water or dust does not enter. Moreover, do not use the existing piping because there are problems about pressure-tight force and impurity it.

CAUTION **To Disconnect the Appliance from the Main Power Supply.**

This appliance must be connected to the main power supply by means of a circuit breaker or a switch with a contact separation of at least 3 mm.

If this is not possible, a power supply plug with grounding must be used. This plug must be easily accessible after installation. The plug must be disconnected from the power supply socket in order to disconnect the appliance completely from the mains.

The installation fuse (25A D type) must be used for the power supply line of this air conditioner.

⚠ WARNINGS

- **Ask an authorized dealer or qualified installation professional to install/maintain the air conditioner.**

  Inappropriate servicing may result in water leakage, electric shock or fire.
- **Turn off the main power supply switch or breaker before attempting any electrical work.**

  Make sure all power switches are off. Failure to do so may cause electric shock.
- **Connect the connecting cable correctly.**

  If the connecting cable is connected by wrong way, electric parts may be damaged.
- **When moving the air-conditioner for installing it in another place again, be very careful not to get the specified refrigerant (R410A) with any other gaseous body into the refrigeration cycle.**

  If air or any other gas is mixed in the refrigerant, the gas pressure in the refrigeration cycle becomes abnormally high and it resultingly causes burst of the pipe and injuries on persons.

Downloaded from www.Manualslib.com manuals search engine

- **Never modify this unit by removing any of the safety guards or by by-passing any of the safety interlock switches.**
- **Exposure of unit to water or other moisture before servicing may cause a short circuit.**
  Do not store it in a wet basement or expose to rain or water.
- **After unpacking the unit, examine it carefully for possible damage.**
- **Do not install in a place that can increase the vibration of the unit.**
- **To avoid personal injury, be careful when handling parts with sharp edges.**
- **Perform installation work properly according to the Installation Manual.**
  Inappropriate installation may result in water leakage, electric shock or fire.
- **When installing the air conditioner in a small room, provide appropriate measures to ensure that the concentration of refrigerant in the room does not exceed the critical level should leakage occur.**
  It is not dangerous refrigerant; it has not toxicity or combustibility. However, a concentration above 0.3kg/m³ as criterion still causes suffocation. The volume of refrigerant charged to the Multi System air conditioner is more than the volume charged to a conventional individual system.
- **Install the air conditioner securely in a location where the weight of the unit can be sustained adequately.**
- **Perform the specified installation work to guard against an earthquake.**
  If the air conditioner is not installed appropriately, accidents may occur due to the falling unit.
- **If refrigerant gas has leaked during the servicing work, ventilate the room immediately.**
  If the leaked refrigerant gas comes in contact with fire, noxious gas may generate.
- **After the installation work, confirm that refrigerant gas does not leak.**
  If refrigerant gas leaks into the room and flows near a fire source, such as a cooking range, noxious gas may generate.
- **The electrical work must be performed by a qualified electrician in accordance with the Installation Manual. Make sure the air conditioner uses an exclusive circuit.**
  An insufficient circuit capacity or inappropriate installation may cause fire.
- **When wiring, use the specified cables and connect the terminals securely to prevent external forces applied to the cable from affecting the terminals.**
- **Be sure to provide grounding.**
  Do not connect ground wires to gas pipes, water pipes, lightning rods or ground wires for telephone cables.
- **Conform to the regulations of the local electric company when wiring the power supply.**
  Inappropriate grounding may cause electric shock.
- **Do not install the air conditioner in a location subject to a risk of exposure to combustible gas.**
  Otherwise, the combustible gas may leak and a fire may occur.

Downloaded from www.Manualslib.com manuals search engine

2. SPECIFICATIONS

1. Combination List of Indoor/Outdoor Units (○: Possible ×: Impossible)

Outdoor unit \ Indoor unit		Heat Pump Model RAS-			Cooling Only Model RAS-		
		M10GDV-E	M13GDV-E	M16GDV-E	M10GDCV-E	M13GDCV-E	M16GDCV-E
Heat Pump Model RAS-	4M27GAV-E	○	○	○	×	×	×
	3M26GAV-E	○	○	○	×	×	×
	M14GAV-E	○	○	×	×	×	×
	M18GAV-E	○	○	○	×	×	×
Cooling Only Model RAS-	4M27GACV-E	×	×	×	○	○	○
	3M23GACV-E	×	×	×	○	○	○
	M14GACV-E	×	×	×	○	○	×
	M18GACV-E	×	×	×	○	○	○

2. File No. List of Reference Service Manual (Outdoor Units of Multi Air Conditioner)

Outdoor unit		Reference Service Manual
Heat Pump Model RAS-	4M27GAV-E	File No. A05-011
	3M26GAV-E	File No. A05-011
	M14GAV-E	File No. A05-009
	M18GAV-E	File No. A05-009
Cooling Only Model RAS-	4M27GACV-E	File No. A05-011
	3M23GACV-E	File No. A05-014
	M14GACV-E	File No. A05-009
	M18GACV-E	File No. A05-009

3. For the details of the specifications of each indoor/outdoor unit to be combined, refer to the next page and after pages with the above service manuals.

4. Optional Parts List

Product name	Model name
Drain-up kit	RB-F81E2

Downloaded from www.Manualslib.com manuals search engine

RAS-M10GDV-E, RAS-M13GDV-E, RAS-M16GDV-E (Heat Pump Model)

Indoor unit model name			RAS-M10GDV-E	RAS-M13GDV-E	RAS-M16GDV-E
Cooling capacity		(kW)	2.7	3.7	4.5
Cooling capacity range		(kW)	*1	*1	*1
Heating capacity		(kW)	4.0	5.0	5.5
Heating capacity range		(kW)	*1	*1	*1
Power supply		(Ø-V-Hz)	220 – 240 V – 1 Ph – 50 Hz / 220 V – 1 Ph – 60 Hz		
Electric characteristics *2	Operation current	(A)	0.59		
	Power consumption	(W)	110		
	Power factor	(%)	81		
Blower unit	Blower		Multi-blade blower		
	Blower motor output	(W)	60		
	Blower speed		5 (Low, Low+, Med, Med+, High)		
	Air flow (Cooling High *3)	(m³/h)	720	780	780
	Air flow (Heating High *3)	(m³/h)	720	780	780
	External static pressure (Upper limit)	(Pa)	54.9 (5.6 mmAq)	63.7 (6.5 mmAq)	63.7 (6.5 mmAq)
	External static pressure (Standard)	(Pa)	35.3 (3.6 mmAq)	41.2 (4.2 mmAq)	41.2 (4.2 mmAq)
Sound level *4	Cooling (high)	(dB)	31	32	33
	Cooling (Medium)	(dB)	27	28	29
	Cooling (Low)	(dB)	23	24	25
	Heating (high)	(dB)	32	33	34
	Heating (Medium)	(dB)	28	29	30
	Heating (Low)	(dB)	24	25	26
Dimension	Height	(mm)	230		
	Width	(mm)	750		
	Depth	(mm)	440		
Net weight		(kg)	19		
Connecting type			Full Operation		
Connecting pipe	Liquid side	(mm)	Ø6.35	Ø6.35	Ø6.35
	Gas side	(mm)	Ø9.52	Ø9.52	Ø12.7
Refrigerant			R410A		
Wiring connection	Interconnection		4 wires : includes earth		
Usable temperature range (Cooling/Heating)		(°C)	21 – 32 / 0 – 28		
Accessory	Wireless remote controller		1		
	Remote controller holder		1		
	Mounting screws		2 (Ø3.5 x 16 L)		
	Drain hose		1		
	Elbow thermal-insulation cover		1		
	Batteries (Manganese)		2		
	Black screws		2		
	Tapping screws		16		
	Owner's manual		1		
	Installation manual		1		

*1 : Refer to the service manual of the outdoor unit to be combined.
*2 : Electrical characteristics at High fan speed under standard static pressure.
*3 : Airflow volume at standard static pressure.
*4 : Sound levels at standard static pressure are measured under the conditions specified by JIS B 8616.

Notes :

- For performance when each indoor unit combined with other unit, refer to the service manual of outdoor unit.
- The specification may be subject to change without notice for purpose of improvement.

Downloaded from www.Manualslib.com manuals search engine

RAS-M10GDCV-E, RAS-M13GDCV-E, RAS-M16GDCV-E (Cooling Only Model)

Indoor unit model name			RAS-M10GDCV-E	RAS-M13GDCV-E	RAS-M16GDCV-E
Cooling capacity		(kW)	2.7	3.7	4.5
Cooling capacity range		(kW)	*1	*1	*1
Power supply		(Ø-V-Hz)	220 – 240 V – 1 Ph – 50 Hz / 220 V – 1 Ph – 60 Hz		
Electric characteristics *2	Operation current	(A)	0.59		
	Power consumption	(W)	110		
	Power factor	(%)	81		
Blower unit	Blower		Multi-blade blower		
	Blower motor output	(W)	60		
	Blower speed		5 (Low, Low+, Med, Med+, High)		
	Air flow (Cooling High *3)	(m^3/h)	720	780	780
	External static pressure (Upper limit)	(Pa)	54.9 (5.6 mmAq)	63.7 (6.5 mmAq)	63.7 (6.5 mmAq)
	External static pressure (Standard)	(Pa)	35.3 (3.6 mmAq)	41.2 (4.2 mmAq)	41.2 (4.2 mmAq)
Sound level *4	Cooling (high)	(dB)	31	32	33
	Cooling (Medium)	(dB)	27	28	29
	Cooling (Low)	(dB)	23	24	25
Dimension	Height	(mm)	230		
	Width	(mm)	750		
	Depth	(mm)	440		
Net weight		(kg)	19		
Connecting type			Full Operation		
Connecting pipe	Liquid side	(mm)	Ø6.35	Ø6.35	Ø6.35
	Gas side	(mm)	Ø9.52	Ø9.52	Ø12.7
Refrigerant			R410A		
Wiring connection	Interconnection		4 wires : includes earth		
Usable temperature range		(°C)	21 – 32		
Accessory	Wireless remote controller		1		
	Remote controller holder		1		
	Mounting screws		2 (Ø3.5 x 16 L)		
	Drain hose		1		
	Elbow thermal-insulation cover		1		
	Batteries (Manganese)		2		
	Black screws		2		
	Tapping screws		16		
	Owner's manual		1		
	Installation manual		1		

*1 : Refer to the service manual of the outdoor unit to be combined.
*2 : Electrical characteristics at High fan speed under standard static pressure.
*3 : Airflow volume at standard static pressure.
*4 : Sound levels at standard static pressure are measured under the conditions specified by JIS B 8616.

Notes :

- For performance when each indoor unit combined with other unit, refer to the service manual of outdoor unit.
- The specification may be subject to change without notice for purpose of improvement.

Downloaded from www.Manualslib.com manuals search engine

3. CONSTRUCTION VIEWS

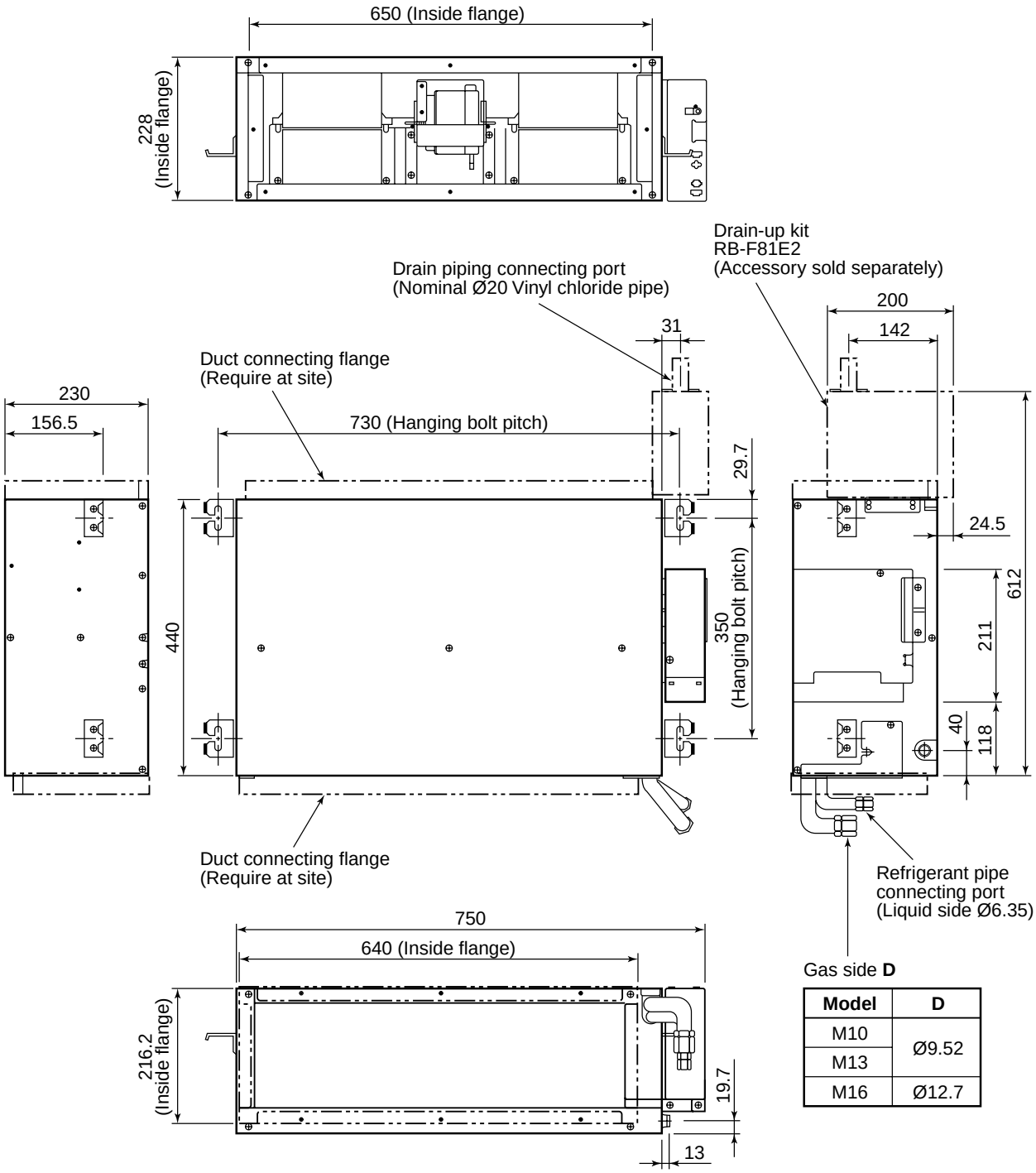

Gas side **D**

Model	D
M10	Ø9.52
M13	
M16	Ø12.7

Downloaded from www.Manualslib.com manuals search engine

4. WIRING DIAGRAM

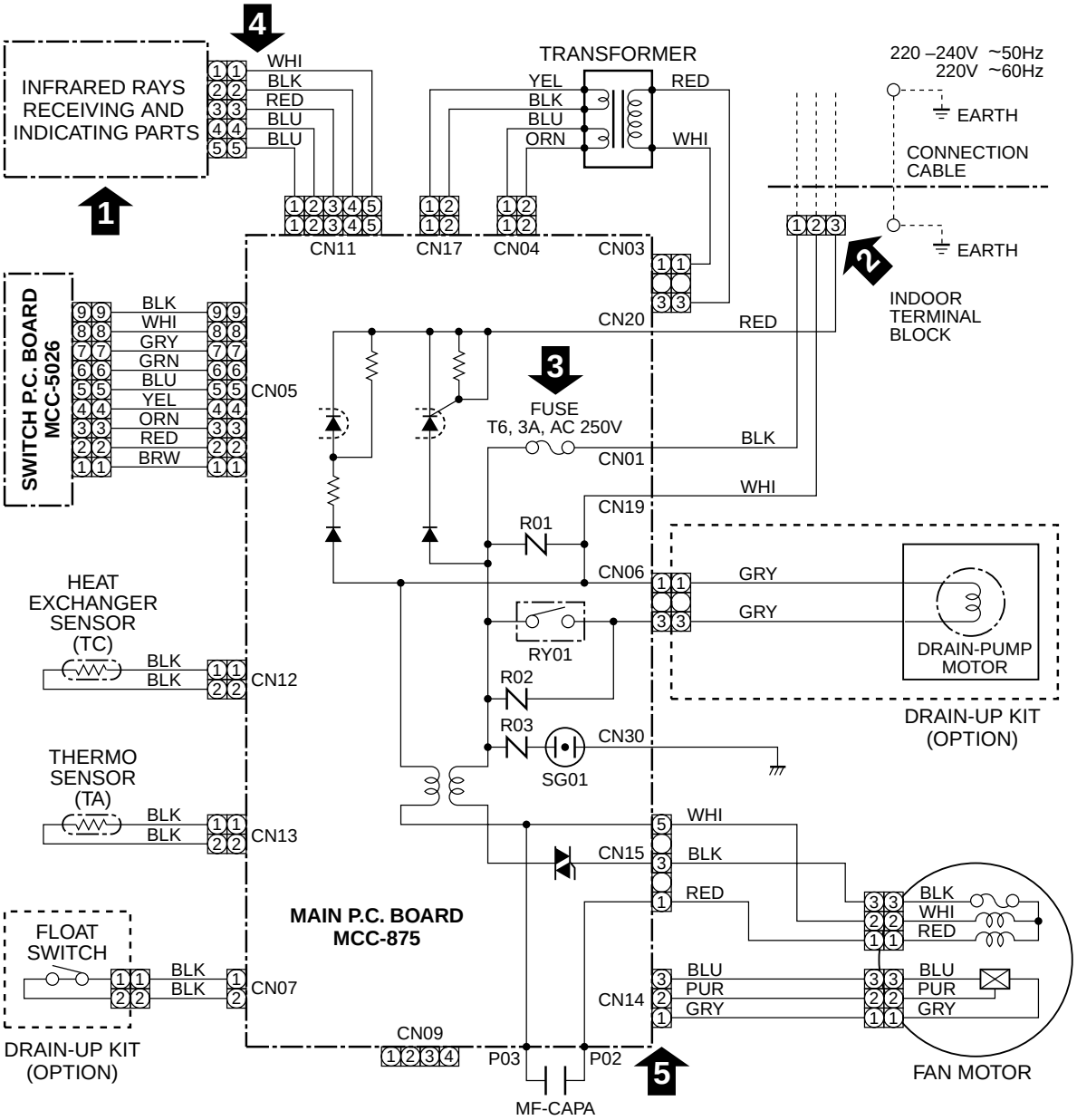

Table 4-1-1 Quick check for failure diagnosis

Check items	Diagnosis result
1 OPERATION indicator	Check to see if the OPERATION indicator goes on and off when the main switch or breaker is turned on. (Check the transformer and receiver unit.)
2 Terminal block	Check the power supply voltage between ① and ②. (Refer to the name plate.) (Check the primary and secondary voltage of the transformer.) Check for fluctuate voltage between ② and ③.
3 Fuse 6.3A	Check to see if the fuse blows out. (Check the R01 of the Varistor.)
4 DC 5V	Check the voltage between ② and ④ on CN11 connector. (Check the transformer and the power supply circuit of the rated voltage.)
5 DC 12V	Check the voltage between ① and ③ on CN14 connector. (Check the transformer and the power supply circuit of the rated voltage.)

Color Identification

BRW : BROWN
RED : RED
WHI : WHITE
YEL : YELLOW
BLU : BLUE
BLK : BLACK
GRY : GRAY
PNK : PINK
ORN : ORANGE
GRN : GREEN
PUR : PURPLE
GRN &YEL : GREEN & YELLOW

Refer to the service data for the detailed failure diagnosis.

Downloaded from www.Manualslib.com manuals search engine

5. SPECIFICATIONS OF ELECTRICAL PARTS

5-1. Indoor Unit

No.	Parts name	Type	Specifications		
1	Fan motor (for indoor)	MF-200-60-4R	Output (Rated) 60W, 4 pole, 1 phase, 220 – 240, 50Hz/220, 60Hz		
			Winding resistance (Ω) at 20°C	**M coil**	**A coil**
				73.8	100
2	Thermo. sensor (TA-sensor)	(–)	10kΩ at 25°C		
3	Transformer	TT-03-3	AC 240V, Secondary DC 15V/DC 500mA		
4	Microcomputer	TMP87PM40ANG			
5	Heat exchanger sensor (TC-sensor)	(–)	10kΩ at 25°C		
6	Line filter (L02)	HF-2430-253Y0R8	25mH, AC 0.8A		
7	Running capacitor (for indoor fan motor)	CMPS45B155UYF	1.5µF, AC 450V (M10, M13)		
		CMPS45B305UYF	3.0µF, AC 450V (M16)		
8	Fuse (F01)	TSCR6.3A	T6.3A, AC 250V		
9	Varistor (R01, R02, R03)	15G471K	470V		
10	Drain pump control relay	G2R-1-H	10A, AC 250V		

Downloaded from www.Manualslib.com manuals search engine

6. REFRIGERANT CYCLE DIAGRAM

RAS-M10GDV-E, RAS-M10GDCV-E
RAS-M13GDV-E, RAS-M13GDCV-E

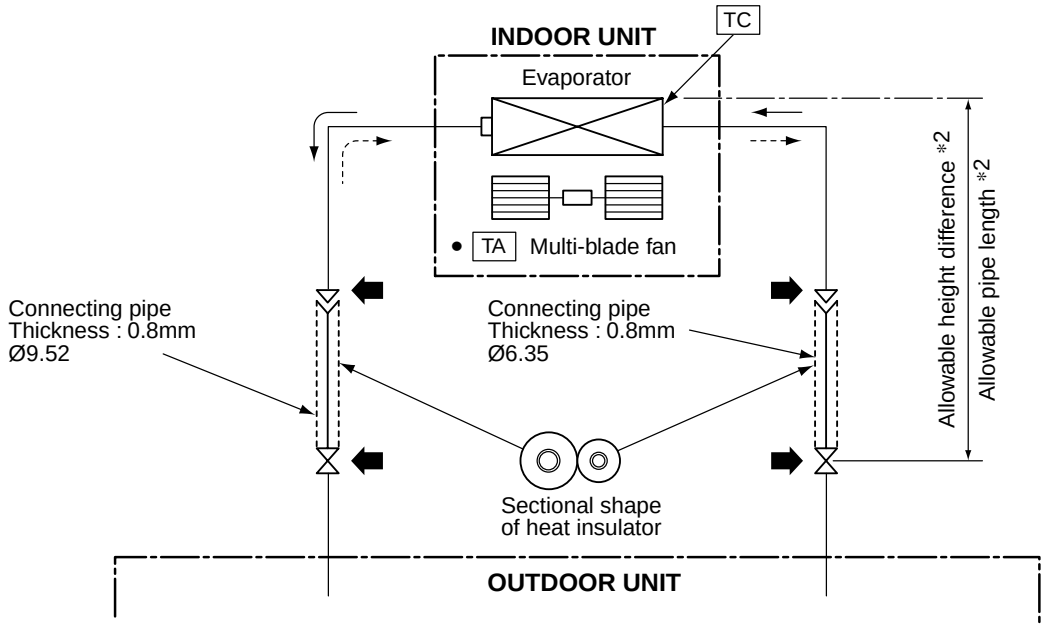

RAS-M16GDV-E, RAS-M16GDCV-E

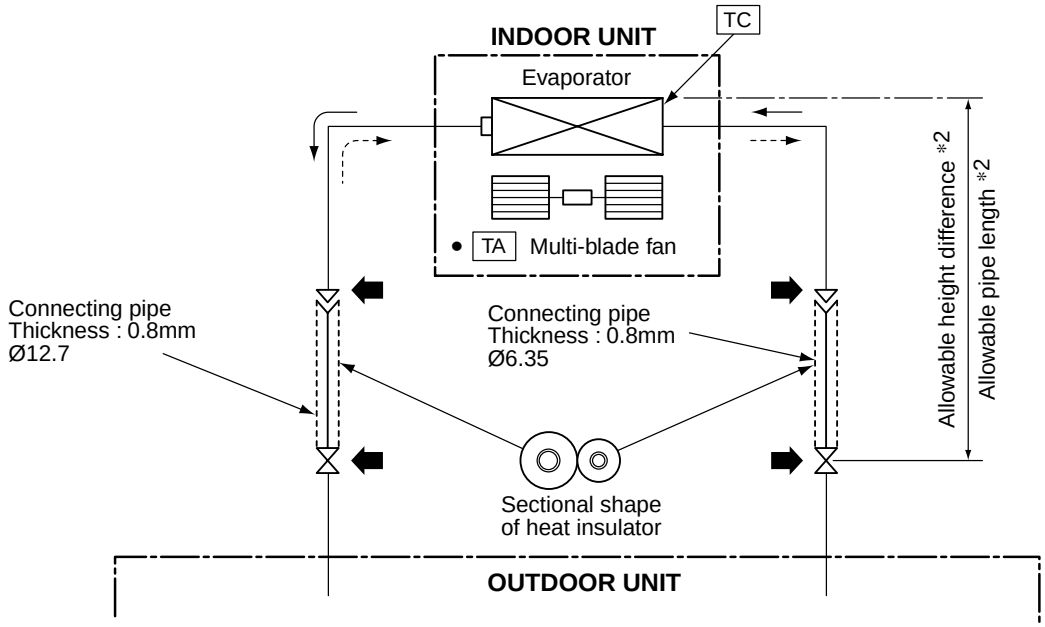

NOTE : Gas leak check position
Refrigerant flow (Cooling)
Refrigerant flow (Heating)*1

*1: Heat pump model only

*2: The allowable pipe length, charge amount of refrigerant, and allowable height difference differ according to the outdoor unit to be combined. For details, refer to the service manual of the outdoor unit to be combined.

Downloaded from www.Manualslib.com manuals search engine

7. CONTROL BLOCK DIAGRAM

7-1. Indoor Unit

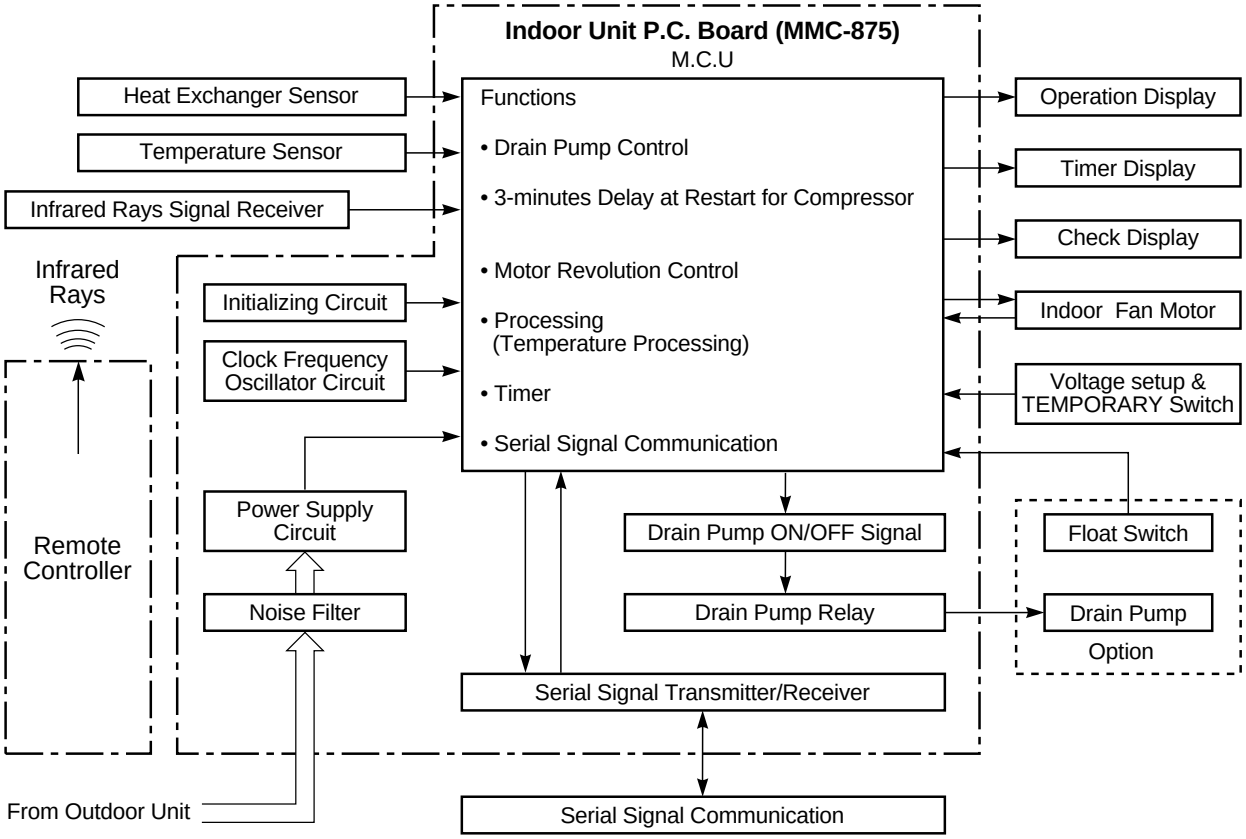

Remote controller

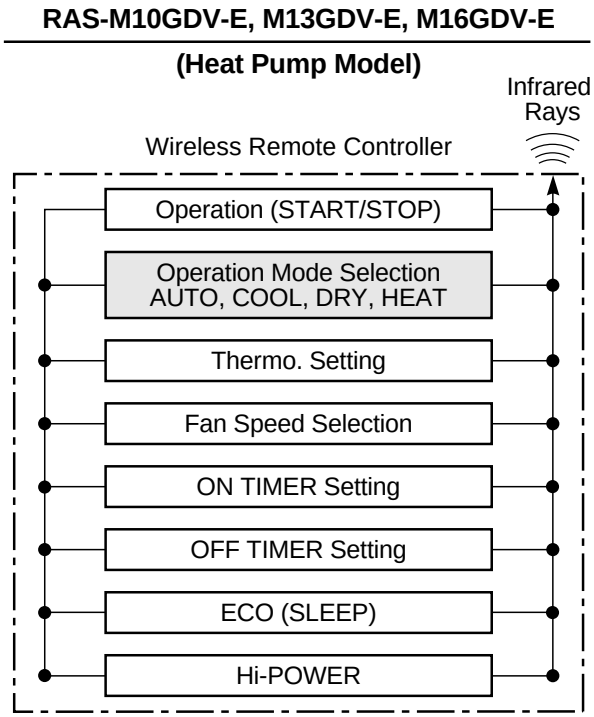

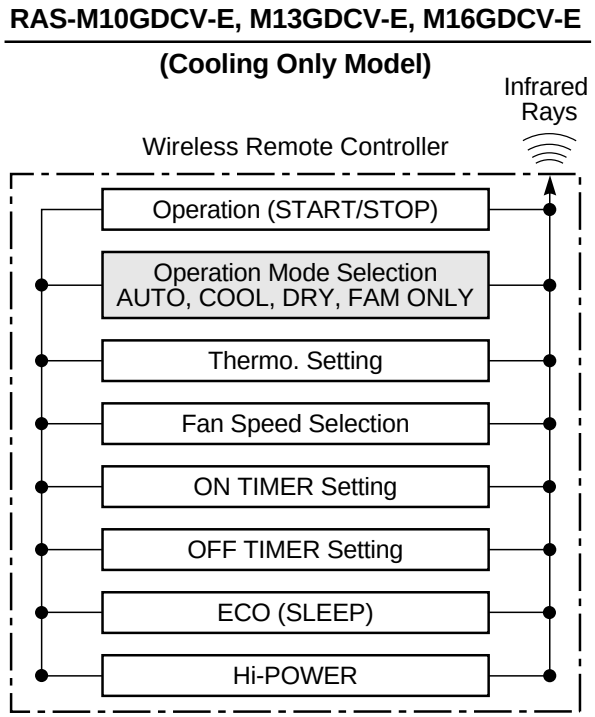

Downloaded from www.Manualslib.com manuals search engine

8. OPERATION DESCRIPTION

8-1. Outline of Air Conditioner Control

This air conditioner is a capacity-variable type air conditioner, which uses AC motor for the indoor fan motor and DC motor for the outdoor fan motor. And the capacity-proportional control compressor which can change the motor speed in the range around from 20 to 100 rps is mounted. The AC motor drive circuit is mounted to the indoor unit. The compressor and the inverter to control outdoor fan motor are mounted to the outdoor unit. The entire air conditioner is mainly controlled by the indoor unit controller.

The indoor unit controller drives the indoor fan motor based upon command sent from the remote controller, and transfers the operation command to the outdoor unit controller.

The outdoor unit controller receives operation command from the indoor unit side, and controls the outdoor fan and the pulse modulating valve. (PMV)

Besides, detecting revolution position of the compressor motor, the outdoor unit controller controls speed of the compressor motor by controlling output voltage of the inverter and switching timing of the supply power (current transfer timing) so that motors drive according to the operation command.
And then, the outdoor unit controller transfers reversely the operating status information of the outdoor unit to the indoor unit controller.

As the compressor adopts four-pole brushless DC motor, the frequency of the supply power from inverter to compressor is two-times cycles of the actual number of revolution.

1. Role of indoor unit controller

   The indoor unit controller judges the operation commands from the remote controller and performs the following functions.

   - Judgment of suction air temperature of the indoor heat exchanger by using the indoor temp. sensor.
   - Temperature setting of the indoor heat exchanger by using heat exchanger sensor (Prevent-freezing control)
   - Indoor fan motor operation control
   - LED display control
   - Transferring of operation command signal (Serial signal) to the outdoor unit
   - Reception of information of operation status (Serial signal including outside temp. data) from the outdoor unit and judgment/display of failure.

2. Role of outdoor unit controller

   Receiving the operation command signal (Serial signal) from the indoor unit controller, the outdoor unit performs its role.

   - Compressor operation control
   - Operation control of outdoor fan motor
   - PMV control

   } Operations followed to judgment of serial signal from indoor side.

   - Detection of inverter input current and current release operation
   - Over-current detection and prevention operation to transistor module (Compressor stop function)
   - Compressor and outdoor fan stop function when serial signal is off (when the serial signal does not reach the board assembly of outdoor control by trouble of the signal system)
   - Transferring of operation information (Serial signal) from outdoor unit to indoor unit
   - Detection of outdoor temperature and operation revolution control
   - Defrost control in heating operation ((Heat pump model only.) Temp. measurement by outdoor heat exchanger and control for 4-way valve and outdoor fan)

3. Contents of operation command signal (Serial signal) from indoor unit controller to outdoor unit controller

   The following three types of signals are sent from the indoor unit controller.

   - Operation mode set on the remote controller
   - Compressor revolution command signal defined by indoor temperature and set temperature (Correction along with variation of room temperature and correction of indoor heat exchanger temperature are added.)
   - For these two types of signals ([Operation mode] and [Compressor revolution]), the outdoor unit controller monitors the input current to the inverter, and performs the followed operation within the range that current does not exceed the allowable value.
   - Temperature of indoor heat exchanger by indoor heat exchanger sensor
     (Minimum revolution control)

Downloaded from www.Manualslib.com manuals search engine

4. Contents of operation command signal (Serial signal) from outdoor unit controller to indoor unit controller

   The following signals are sent from the outdoor unit controller.

   - The current operation mode
   - The current compressor revolution
   - Outdoor temperature
   - Existence of protective circuit operation.

     For transferring of these signals, the indoor unit controller monitors the contents of signals, and judges existence of trouble occurrence.

     Contents of judgment are described below.

     - Whether distinction of the current operation status coincide with the operation command signal
     - Whether protective circuit operates

       When no signal is received from the outdoor unit controller, it is assumed as a trouble.

8-1-1. Capacity Control

The cooling capacity is varied by changing compressor motor speed. The inverter changes compressor motor speed by changing AC 220 – 240V power to DC once, and controls capacity by changing supply power status to the compressor with transistor module (includes 6 transistors). The outline of the control is as follows : The revolution position and revolution speed of the motor are detected by detecting winding electromotive force of the compressor motor under operation, and the revolution speed is changed so that the motor drives based upon revolution speed of the operation command by changing timing (current transfer timing) to exchange inverter output voltage and the power supply to the winding.

Detection of the revolution position for controlling is performed 12 times per 1 revolution of compressor.

The range of supply power frequency to the compressor differs according to the operation status.

8-1-2. Current Release Control

The outdoor main circuit control section (Inverter assembly) detects the input current to the outdoor unit. If the current value with compressor motor speed instructed from indoor side exceeds the specified value, the outdoor main circuit control section controls compressor motor speed by reducing motor speed so that value becomes closest to the command within the limited value.

8-1-3. Indoor Fan Control (AC Fan Motor)

The indoor fan is operated by motor speed non-step variable AC phase control drive system. For airflow rate, motor speed is controlled manually in five steps (LOW, LOW$^+$, MED, MED$^+$, HIGH), or automatically adjusted in AUTO mode according to the room temperature. It is not selected by relay, so the switching noise will not be heard.

Table 8-1-1 shows the fan speed.

This indoor unit performs the phase output constant control of the fan motor.

(Does not control the revolution speed.)

Since the fan speed varies according to the external static pressure, the values described in the table can be used to confirm the motor functions. However, the maximum revolution speed is limited to 1300rpm for protection of the terminal voltage of the running capacitor.

Table 8-1-1 Reference fan speed

Operation mode	Fan mode	Fan speed (rpm)		
		M10	M13	M16
COOL	H	900 to 1150	950 to 1200	1000 to 1250
	L	600 to 800	650 to 850	700 to 900
HEAT	H	900 to 1150	950 to 1200	1000 to 1250
	L	650 to 850	700 to 900	750 to 950

Downloaded from www.Manualslib.com manuals search engine

8-2. Description of Operation Circuit

- Turning [ON] the breaker will flash the operation lamp.

  This is the display of power-ON (or notification of power failure).
- When pushing [START/STOP] button on the remote controller, receive sound is issued from the main unit.

8-2-1. Fan Only Operation (The Remote controller MODE Button is Set to the FAN ONLY Operation)

- Once the setting is made, the operation mode is memorized in the microcomputer so that the same operation can be effected thereafter simply by pushing [START/STOP] button.
- When the FAN button is set to the AUTO position, the indoor fan motor operates as shown in Fig. 8-2-1. When the FAN SPEED button is set manually, the motor operates with a constant air flow.
- ECO mode cannot be set.

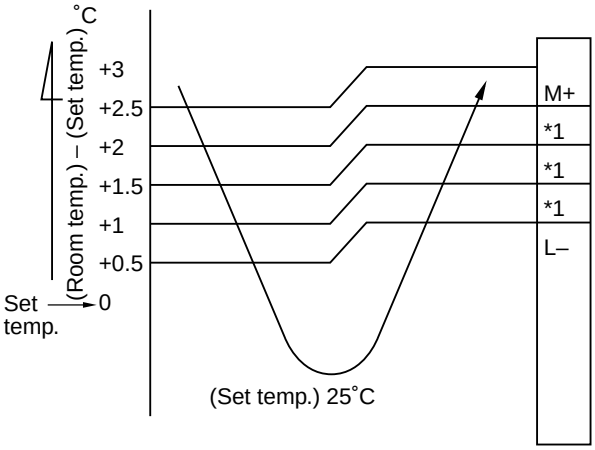

NOTE :

*1: Calculated from the difference in the motor speed of M+ and L–.

Fig. 8-2-1 Auto setting of air flow

8-2-2. Cooling Operation (The Remote controller MODE Button is Set to the COOL Position)

- Once the setting is made, the operation mode is memorized in the microcomputer so that the same operation can be effected thereafter simply by pushing [START/STOP] button.
- A cooling operation signal is transmitted to outdoor unit.
- The indoor fan motor operates as shown in Fig.8-2-2 when FAN button is set to AUTO.
- The motor operates with a constant air flow when the FAN button is set manually.
- The outdoor unit controls the outdoor fan and the compressor motor speed according to the operation command signal sent from the indoor unit.

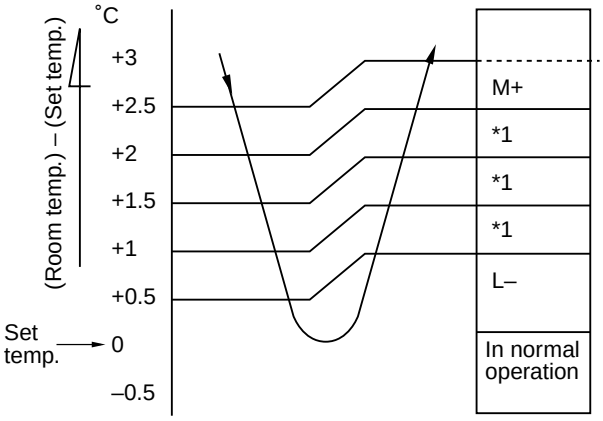

NOTE :

*1: Calculated from the difference in the motor speed of M+ and L–.

Fig. 8-2-2 Setting of air flow [Air Flow AUTO]

1. Cooling capacity control

- The cooling capacity and room temperature are controlled by changing the compressor motor speed according to both the difference between the temperature detected by the room temperature sensor and the temperature set by TEMP button and also any change in room temperature.
- When compressor has been activated or reactivated, compressor motor speed goes up with restricting the maximum speed gradually from operation start.
- When room temperature is lower than set temperature, indoor fan motor is operated at fan speed L– as shown in Fig. 8-2-2 while the outdoor unit stops.

Downloaded from www.Manualslib.com manuals search engine

2. Prevent-freezing control

If temperature of indoor heat exchanger detected by the indoor heat exchanger sensor is 4°C or lower, compressor motor speed is gradually lowered to prevent freezing of the indoor heat exchanger. If temperature is 6°C or higher, return the operation to the above item 1.

3. Limit for maximum compressor motor speed by indoor fan speed

When outdoor temperature sensor detected 32°C or lower, and indoor heat exchanger sensor detected 15°C or lower, the maximum compressor motor speed is limited by the indoor fan speed.

8-2-3. DRY Operation (The Remote controller MODE Button is Set to the DRY Position)

- Once the setting is made, the operation mode is memorized in the microcomputer so that the same operation can be effected thereafter simply by pushing [START/STOP] button.
- Dry operation signal is transmitted to outdoor unit.
- The Cooling operation giving priority to dehumidifying, which restrains the indoor fan speed and compressor motor speed, is performed.
- The indoor fan motor operates as shown in Fig. 8-2-3. (Fan speed is AUTO only.)
- The outdoor unit controls the outdoor fan relay and the compressor motor speed according to the operation command signal sent from the indoor unit.

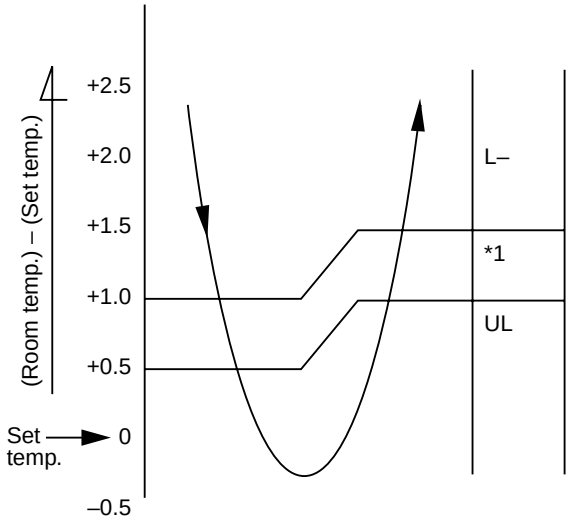

NOTE :

*1 : Middle motor speed between L– and UL

Fig. 8-2-3 Setting of air flow

1. Dehumidifying-preferential Cooling capacity control

- The cooling capacity and room temperature are controlled by changing the compressor motor speed according to both the difference between the temperature detected by the room temperature sensor and the temperature set by TEMP button and also any change in room temperature.
- When the air conditioner operates in Dry mode, the maximum compressor motor speed is restricted.

  While multiple indoor units operate, compressor motor speed is calculated in the outdoor unit to operate.
- When room temperature is lower than set temperature, indoor fan motor is operated at fan speed UL as shown in Fig. 8-2-3 while the outdoor unit stops.
- Other controls than the above-mentioned controls are common to those of Cooling operation.

8-2-4. Heating Operation (Heat pump model only)

Transferring of heating operation signal from indoor unit to outdoor unit starts.

The indoor fan motor operates by the room temperature when selecting “AUTO” of “FAN” as shown in Fig. 8-2-4, and operates with a set air flow when selecting “Low” to “High”.

However, to prevent cold draft, revolution speed of the fan is restricted by indoor heat exchanger temperature when air flow is AUTO (Fig. 8-2-5) and starting of FAN Manual.

[Basic control]

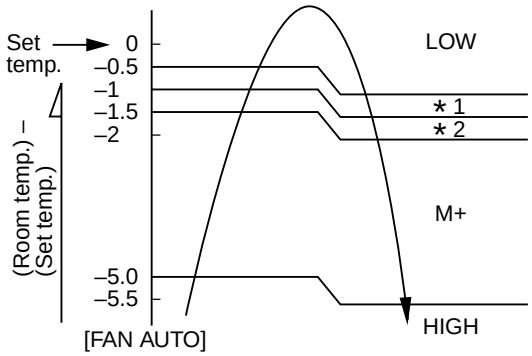

NOTE :

*1, *2 : Approximate revolution speed of M+ and L to linear according to temperature.

Fig. 8-2-4 Setting of air flow

Downloaded from www.Manualslib.com manuals search engine

[Cold draft preventing control]

The upper limit of fan revolution speed is shown below.

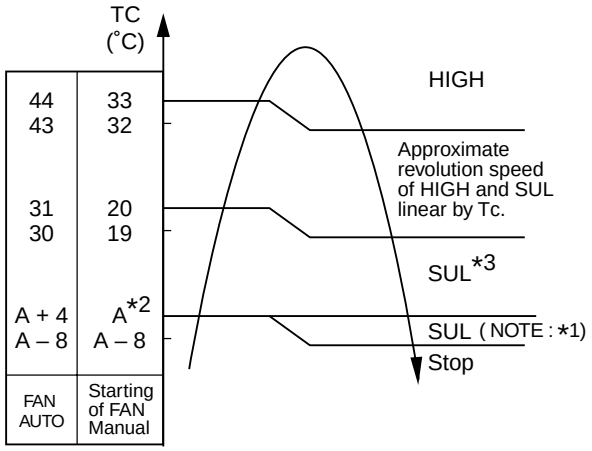

NOTES :

*1 Stops for 2 minutes after thermostat-OFF.

*2 24°C when the set temp. is 24°C or more
Set temp. when the set temp. is below 24°C

*3 SUL : Super ultra low

Fig. 8-2-5 Cold draft preventing control

The outdoor unit controls the outdoor fan based upon the operation signal sent from the indoor unit, and also controls revolution speed of the compressor motor.

The power coupler for 4-way valve is turned on, and turned off in defrost operation.

1. Heating capacity control

Calculate the difference between temperature detected by room temp. sensor every minute and the set temp. set on “Temp. indicator” and variation amount of room temp.

Then, obtain the correction amount of the command signal, and correct the current frequency command signal.

2. High-temp. release control

If temperature of the indoor heat exchanger detected by the indoor heat exchanger sensor is 58°C or higher, compressor motor speed is gradually lowered to prevent over-temp. rising of compressed pressure.

If temperature becomes below 51°C, return to above item 1.

3. Defrost control

1) Detection of frost

In heating operation, time duration while the compressor operates is counted, and defrost operation starts by any condition described below.

a. The counted time is 28 minutes or more, and status that temperature of the outdoor heat exchanger detected by the outdoor heat exchanger is –20°C or lower continued for 3 minutes or more.

b. The counted time is 28 minutes or more, and status that temperature of the outdoor heat exchanger detected by the outdoor heat exchanger is –8°C or lower and temperature lowered by 2.5 °C than the minimum value of the outdoor heat exchanger during 10 to 15 minutes count time continued for 3 minutes or more.

c. The counted time is 34 minutes or more, and status that temperature of the outdoor heat exchanger detected by the outdoor heat exchanger is –5°C or lower and temperature lowered by 3.0 °C than the minimum value of the outdoor heat exchanger during 10 to 15 minutes count time continued for 3 minutes or more.

d. The counted time is 4 hours or more, and status that temperature of the outdoor heat exchanger detected by the outdoor heat exchanger is 0°C or lower and temperature lowered by 1.0 °C than the minimum value of the outdoor heat exchanger during 10 to 15 minutes count time continued for 3 minutes or more.

e. If the following three conditions are satisfied, defrost operation (Timer defrost) starts after heating operation for 48 minutes.

① Setting on remote controller, HEAT (mode), HIGH (Fan), 30°C (temp.).

② Room temp. is 19°C to 24°C, and outside air temp. is 5°C or lower.

③ Defrost operation has been already performed once.

2) Defrost operation

Operation of the compressor is stopped once, turn off power coupler for 4-way valve after 10 seconds, and then exchange the 4-way valve.

After 20 seconds, restart operation of the compressor. Turn off the outdoor fan just when the compressor stopped.

If temperature of the indoor heat exchanger is lower than settimg temperature, stop the indoor fan.

Downloaded from www.Manualslib.com manuals search engine

3) Defrost reset

Resetting operation from defrost to heating is performed when any one of the following conditions is satisfied.

a. Temperature of the outdoor heat exchanger rose to +8°C or higher.

b. A status that temperature of the outdoor heat exchanger is +5°C or higher continued for 80 seconds.

c. Defrost operation continued for 10 minutes.

In resetting defrost operation, the compressor stops for 50 seconds if defrost has started under condition a. to d. in item 1, but the compressor is reset to heating operation keeping operated if defrost has started under condition e. in item 1.

8-2-5. Auto Operation

1. Selection of operation mode

As shown in Fig. 8-2-6, the operation starts by selecting automatically the status of the room temperature (Ta) when starting AUTO operation.

Ts : Setting temperature by remote controller

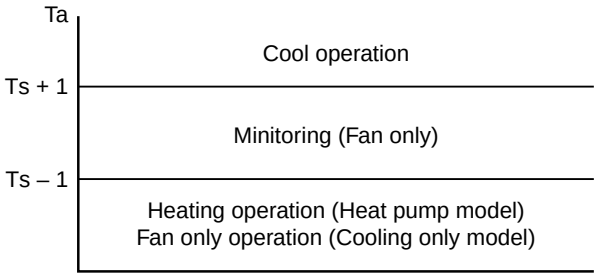

*1 When reselecting the operation mode, the fan speed is controlled by the previous operation mode.

Fig. 8-2-6

2. Mode selection is done again if the cpmpressor turns off for 15 minutes continuesly, due to the room temperature.

8-2-6. ECO Timer Operation

When you push the ECO button during cooling, Dry, Heating, or A operation, the air conditioner will start the following operation.

The fan speed will be automatically controlled.

- **Cooling operation ☼ / Dry operation 💧**

In the operation suppression zone, where capacity is kept to the minimum, overcooling is prevented by raising the temperature setting by 1°C after 1 hour and by 2°C after 2 hours of operation.

The room temperature is thus regulated between the operation suppression zone and the set temperature.

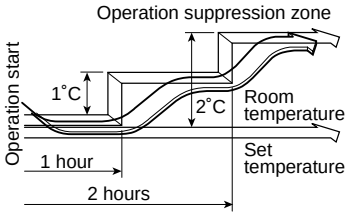

Fig. 8-2-7

- **Heating operation ☼ (Heat pump model only)**

In the operation suppression zone, where capacity is kept to the minimum, overheating is prevented by lowering the temperature setting by 1°C after 1 hour and by 2°C after 2 hours of operation.

The room temperature is thus regulated between the set temperature and the operation suppression zone.

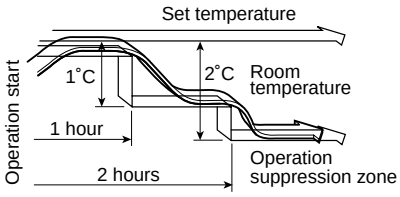

Fig. 8-2-8

8-2-7. High POWER Operation

When you push the Hi-POWER button during Cooling, Heating, or A operation, the air conditioner will start the following operation. (A operation : Auto change over)

- **Cooling operation**

Performs the cooling operation at 1°C lower than the setting temperature.

When the room temperature is above the setting temperature. In addition, fan speed is high*.

* Noise level raises in accordance with fan speed.

- **Heating operation (Heat pump model only)**

Performs the heating operation at 2°C higher than the setting temperature.

Downloaded from www.Manualslib.com manuals search engine

8-3. TEMPORARY Operation

- Setting the TEMPORARY switch to “AUTO” starts the automatic operation, to “COOL” starts the cooling operation (LOW), respectively.
- Setting the TEMPORARY switch to “AUTO” or “COOL”, the operation can’t be performed from the remote controller. (without “STOP” button)
- Temporary Auto Operation is operated with the set temperature fixed at 24°C.
- Temporary Cooling Operation is operated with Indoor fan speed fixed to Low and with compressor motor speed fixed to 28.0Hz.

To stop the temporary operation, set the switch to “AUTO RESTART OFF”.

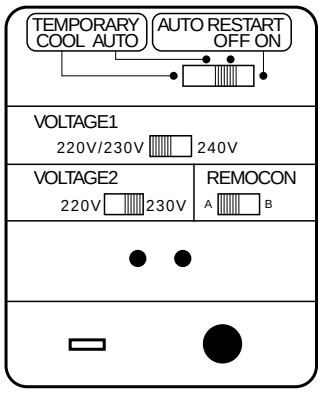

Fig. 8-3-1

8-4. Control of Drain-up Kit (Option)

8-4-1. Dain Control

- In cooling, and dry operation, drain pump is actuated to drain up.

[OPERATION CONTROL]

During cooling, and drying operation :
Drain pump ON.

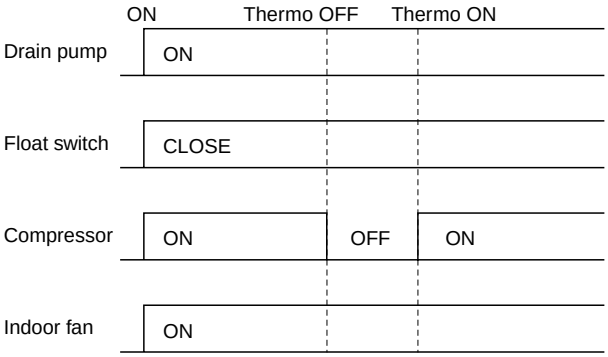

Fig. 8-4-1

8-4-2. Over Flow Check Control

- Drain level is checked by float switch. If the float switch is actuated (OPEN), stop operation of the outdoor unit and operate the drain pump exert to drain out.
- In fan only, heating operation (Heat pump model only), and even in stoppage but while float switch is actuated, drain pump is ON (Operation).

[OVERFLOW CHECK AND CONTROL]

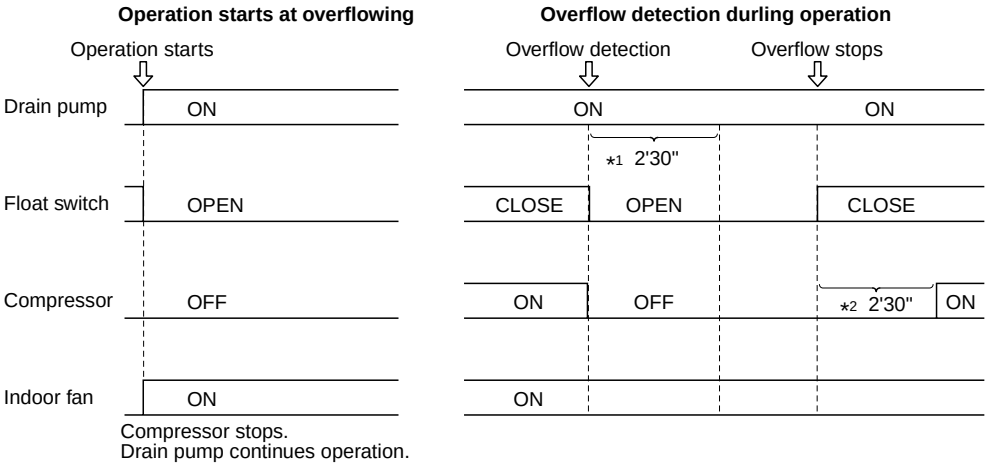

*1 If the float switch is not reset (closed) within 2 minutes 30 seconds, the operation lamp flashes. (5Hz)
*2 When the float switch is reset, the following phenomena appear.
- The operation lamp stops flashing and keeps lighting.
- The outdoor unit is reactivated 2 minutes and 30 seconds after.

Fig. 8-4-2

Downloaded from www.Manualslib.com manuals search engine

8-5. Auto Restart Function

This unit is equipped with an Automatic restarting function which allows the unit to restart and resume the set operating conditions in the event of a supply power shutdown without the use of the remote controller.

The operation will resume without warning three minutes after the power is restored.

INFORMATION

The AUTO RESTART FUNCTION is not set to work on shipment from the factory, and so it is necessary to set it to function as required.

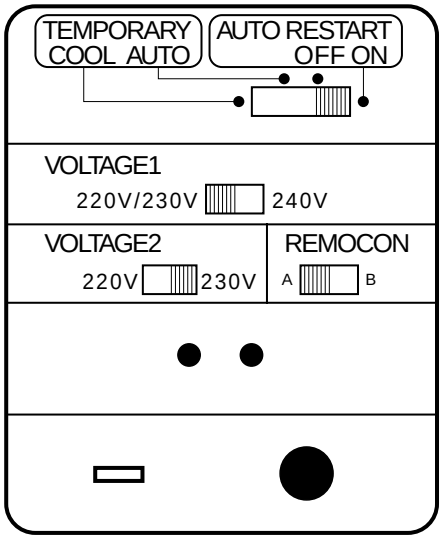

HOW TO SET THE AUTO RESTART

To set the auto restart function, proceed as follows:

OPERATION	MOTION
Slide the slide switch to AUTO RESTART ON side. 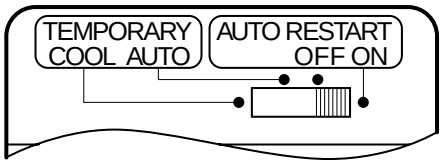	When you set to “ON” position of Auto restart, Beep, Beep, Beep sound (3 times) are heard. (During power supply to the unit) When power supplying returns, system will be restart automatically.

- The Auto Restart function will not accept an instruction if timer operation with the remote controller is selected. (Please refer to the section of setting the timer operation.)

HOW TO CANCEL THE AUTO RESTART

To cancel the AUTO RESTART function, proceed as follows:

The system will now be required to manually restart with the remote controller after the main supply is returned.

OPERATION	MOTION
Slide the slide switch to AUTO RESTART OFF side. 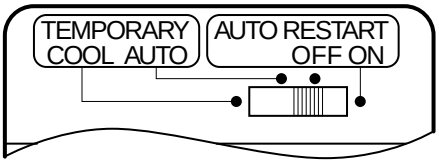	When you set to “OFF” position of Auto restart, Beep, Beep, Beep sound (3 times) are heard. (During power supply to the unit) When power supplying returns, system will not be restart automatically.

Downloaded from www.Manualslib.com manuals search engine

8-6. Remote Controller

8-6-1. Parts Name of Remote Controller

1 **START/STOP button**

Push the button to start operation.
(A receiving beep is heard.)

Push the button again to stop operation.
(A receiving beep is heard.)

If no receiving sound is heard from the indoor unit, push the button twice.

2 **Mode select button (MODE)**

Push this button to select a mode.

Each time you push the button, a mode is selected in a sequence that goes from
A : Auto changeover control, : Cool,
: Dry, : Heat (For Heat pump model only),
: Fan only (For Cooling only model), and back to A. (A receiving beep is heard.)

3 **Temperature button**

▲... The set temperature is increased up to 30°C.

▼... The set temperature is decreased to 17°C.
(A receiving beep is heard.)

4 **Fan speed button (FAN)**

Push this button to select fan speed. When you select AUTO, the fan speed is automatically adjusted according to the room temperature.

You can also manually select the desired fan speed among five settings.

(LOW , LOW+ , MED , MED+ , HIGH) (A receiving beep is heard.)

5 **Off timer button (OFF)**

Push this button to set the OFF timer.

6 **On timer button (ON)**

Push this button to set the ON timer.

7 **Reserve button (SET)**

Push this button to reserve time settings.
(A receiving beep is heard.)

8 **Cancel button (CLR)**

Push this button to cancel ON timer and OFF timer. (A receiving beep is heard.)

9 **High power button (Hi-POWER)**

Push this button to start the high power operation.

CAUTION

- When pushing the “SWING”, “FIX” and “FILTER” buttons, indoor unit does not operate and the receiving beep sound also not appear.

10 **Memory button (MEMO)**

Push this button to stand by memorizing the settings.

Push the button again for more than 4 seconds to memorize the setting indicated on the remote controller and P mark is indicated.
(Refer to “MEMORY/PRESET OPERATION”)

11 **ECO timer button (ECO)**

Push this button to start the ECO timer (OFF timer) operation.

You can select the OFF timer time among four settings (1, 3, 5 or 9 hours).

12 **PRESET button**

Push this button to operate the air conditioner according to settings memorized by the MEMO button.

13 **TIMER button**

Use this button to change the clock, ON timer, and OFF timer times.

To forward the time, push the “TIMER ” button.

To set back the time, push the “TIMER ” button.

14 **Automatic operation button (AUTO)**

Push this button to operate the air conditioner automatically. (A receiving beep is heard.)
(Refer to “AUTOMATIC OPERATION”)

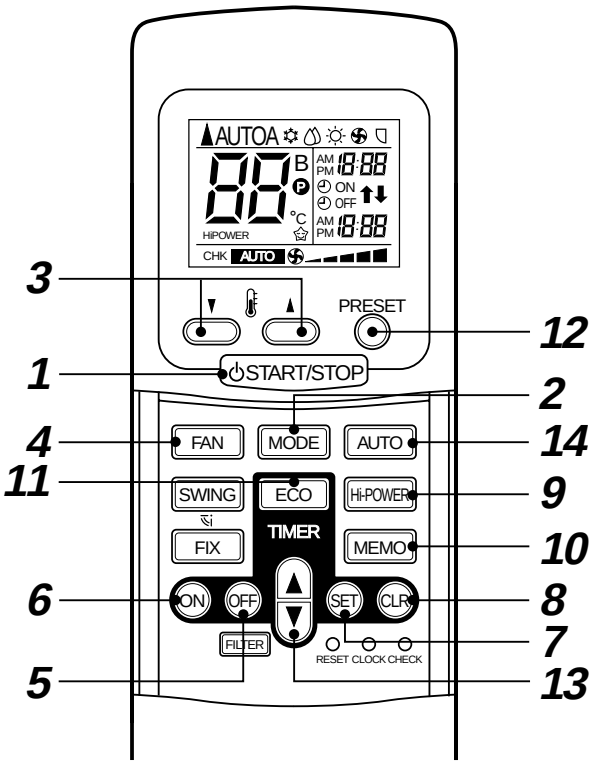

Fig. 8-6-1

Downloaded from www.Manualslib.com manuals search engine

8-6-2. Names and Functions of Indications on Remote Controller

Display

All indications, except for clock time indication, are indicated by pushing the START/STOP button.

1 **Transmission mark**

This transmission mark ▲ indicates when the remote controller transmits signals to the indoor unit.

2 **Mode display**

Indicates the current operation mode.
(AUTO : Automatic control, A : Auto changeover control, ☼ : Cool, 💧 : Dry, ☀ : Heat, ✇ : Fan only)

3 **Temperature display**

Indicates the temperature setting (17°C to 30°C).

When you set the operating mode to ✇ : Fan only, no temperature setting is indicated.

4 **FAN speed display**

Indicates the selected fan speed. AUTO or one of five fan speed levels (LOW , LOW+ , MED , MED+ , HIGH) can be indicated.

Indicates AUTO when the operating mode is either AUTO or 💧 : Dry or ♢ : ECO.

5 **TIMER and clock time display**

The time set for timer operation or clock time is indicated.

The present time is always indicated except for TIMER operation.

6 **High power display**

Indicates when the High power operation starts.

Push the Hi-POWER button to start and push it again to stop the operation.

7 **Ⓟ (MEMORY) display**

Flashes for 3 seconds when the MEMO button is pushed during operation.

Ⓟ mark is indicated when the button is not pushed for more than 3 seconds while the mark is flashing.

Push another button to turn off the mark.

8 **ECO TIMER display**

Indicates when the ECO TIMER is in operation.

Each time you push the ECO button, the display changes in the sequence of 1, 3, 5, or 9h.

9 **A, B change indication remote controller**

Push the “CHK” point and “MODE” button at once, for changing remote controller setting from “A” to “B”. (Priority is given to “A” setting.)

The switch panel of the indoor unit is also changed to “B” setting.

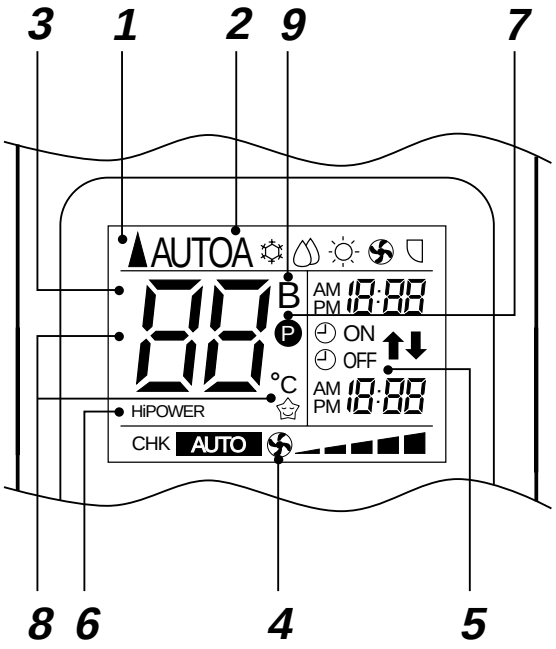

- In the illustration, all indications are indicated for explanation.

  During operation, only the relevant indications will be indicated on the remote controller.

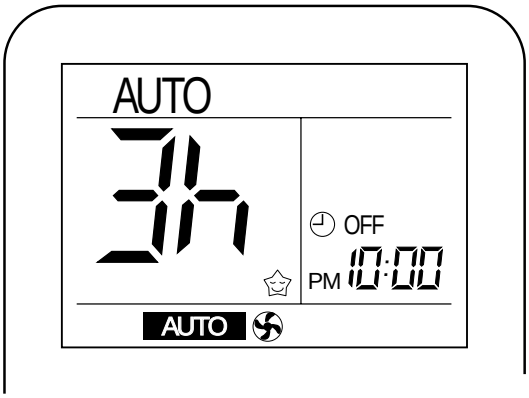

Fig. 8-6-2

Downloaded from www.Manualslib.com manuals search engine

9. INSTALLATION PROCEDURE

9-1. Accessory Parts and Parts to be Procured Locally

9-1-1. Accessory Parts

Part name	Q'ty	Shape
Wireless remote controller	1	
Remote controller holder	1	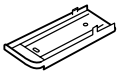
Mounting screws for remote controller holder 3.5mm (diam.) × 16mm	2	
Drain hose	1	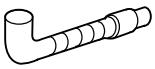
Installation Manual	1	

Part name	Q'ty	Shape
Elbow thermal-insulating cover	1	
Batteries (Manganese)	2	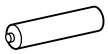
Black screws for switch panel 4mm (diam.) × 10mm	2	
Tapping screws for flange (2nd type) 4mm (diam.) × 8mm	16	
Owner's Manual	1	

9-1-2. Parts to be Procured Locally

Connecting pipe (Liquid side) (6.35mm (diam.), Nominal (diam.) 1/4" thick 0.8mm)
Connecting pipe (Gas side) (12.7mm (diam.), Nominal (diam.) 1/2" thick 0.8mm) RAS-M16GDCV-E, RAS-M16GDV-E (9.52mm (diam.), Nominal (diam.) 3/8" thick 0.8mm) RAS-M10GDCV-E, RAS-M10GDV-E RAS-M13GDCV-E, RAS-M13GDV-E
Power supply cord 2.5mm² (H07RN-F or 245IEC66)

Connecting cable H07RN-F or 245IEC66 (1.0mm²)
Thermal insulation for refrigerant pipe (10mm or more, thermal insulating foam polyethylene)
Thermal insulation for drain pipe (10mm or more, foam polyethylene)
Drain pipe (Outer 26mm (diam.))
Tapes
Grounding cable (1.6mm (diam.) or more)

Duct
Flange
Panel
Air filter

Downloaded from www.Manualslib.com manuals search engine

9-2. Selection of Installation Place

⚠ WARNINGS

- **Install the air conditioner where there is sufficient strength to withstand the weight of the unit.**
  If the strength is not sufficient, the unit may fall down resulting in injury.
- **Install the air conditioner at a position keeping the height by 2.5m or more from the floor.**
  If you insert your hands or others directly into the unit during running of the air conditioner, it is dangerous because you may contact with revolving fan or active electricity.

⚠ CAUTION

- **Do not install the air conditioner in a location subject to a risk of exposure to combustible gas.**
  Otherwise, the combustible gas leaks, stays around the unit and a fire may occur.

Upon approval of the customer, install the air conditioner in a place that satisfies the following conditions.

- Place where the unit can be installed horizontally.
- Place where a sufficient servicing space can be ensured for safe maintenance and check.
- Place where drained water will not cause any problem.

Avoid installing in the following places.

- Place exposed to air with high salt content (seaside area), or place exposed to large quantities of sulfide gas (hot spring). (Should the unit be used in these places, special protective measures are needed.)
- Place exposed to oil, vapor, oil smoke or corrosive gas.
- Place where organic solvent is used nearby.
- Place close to a machine generating high frequency.
- Place where the discharged air blows directly into the window of the neighboring house. (For outdoor unit)
- Place where noise of the outdoor unit is easy to transmit.
  (When installing the air conditioner on the boundary with the neighbor, pay due attention to the level of noise.)
- Place with poor ventilation. (Before air ducting work, check whether value of air volume, static pressure and duct resistance are correct.)

9-2-1. Installation Space

Secure the space required to installation and servicing.

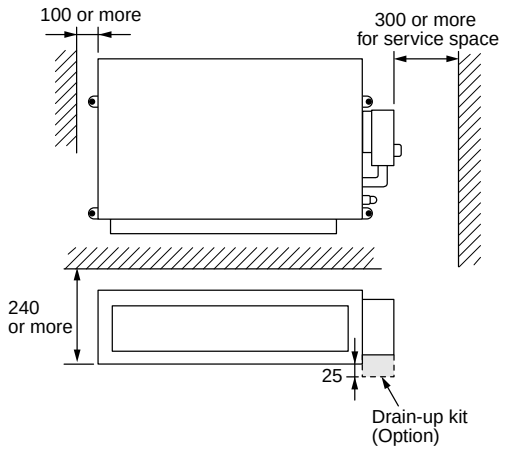

Fig. 9-2-1

9-2-2. Selection of Installation Place

In case of continues the operation of the indoor unit under high-humidity conditions as described below, dew may condense and water may drop.

Especially, high-humidity atmosphere (dew point temperature : 23°C or more) may generate inside of the ceiling.

1. Unit is installed inside of the ceiling with slated roof.
2. Unit is installed at a location using inside of the ceiling as fresh air take-in path.
3. Kitchen

If installing a unit at such place, adhere insulating material (glass wool, etc.) additionally over all the positions of the indoor unit which come to contact with high-humidity atmosphere.

9-2-3. Advice

Arrange the check panel at the suitable place for piping, maintenance and servicing.

Recommend check panel size 450 x 450mm or and more bigger size depending on the maintenance staffs.

Downloaded from www.Manualslib.com manuals search engine

9-3. Installation of Indoor Unit

⚠ WARNING

Install the air conditioner certainly at a place to sufficiently withstand the weight.
If the strength is insufficient, the unit may fall down resulting in human injury.
Perform a specified installation work to guard against an earthquake.
An incomplete installation can cause accidents by the units falling and dropping.

Return air methed is choiced from rear or under direction as shown in figure.

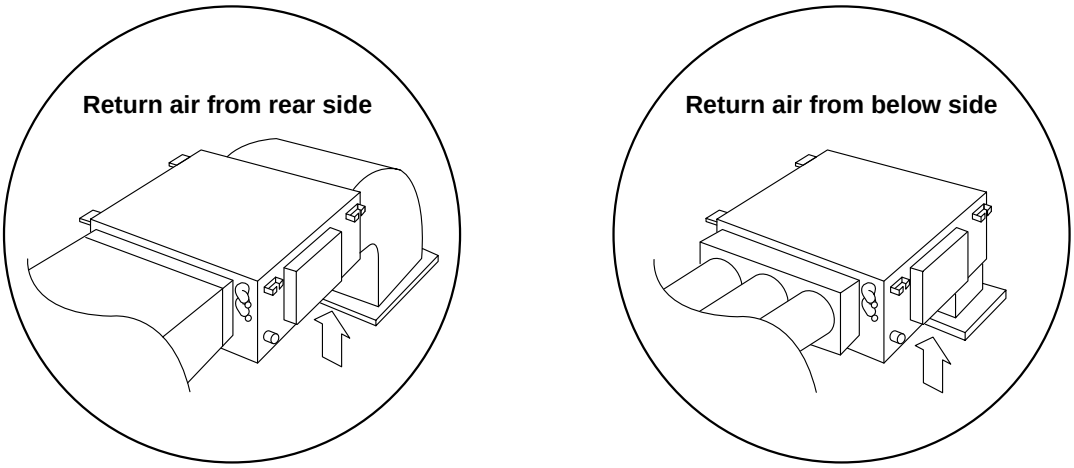

Fig. 9-3-1

- If a system to suck in air directly from the bottom of the unit is adopted, the noise level increases.
  It is recommended to mount the return duct so that air is not directly sucked in.

9-3-1. Installation Procedure

1. Lay drain pipes, refrigerant pipes, and connecting cables under wall or ceiling concurrently with supply/drain water work and piping work.
2. Install the mounting frames of supply/return air panels
3. Positioning of refrigerant and drain pipes
4. Install the indoor unit
   - Preparation for installation
   - Setting/fixing of indoor unit
5. Connect cables and pipes
6. Mount the switch panel and set switches
7. Install supply/return air panels
8. Mount thermal insulation
9. Mount check panel

Fig. 9-3-2

NOTE :

For installation of the outdoor unit, refer to the Installation manual (Packed in the outdoor unit).

Downloaded from www.Manualslib.com manuals search engine

[External view]

REQUIREMENT

The hanging bolt pitch on longitudinal direction is not divided at center with the ceiling opening size.
Therefore, check the relational position in the following figure.

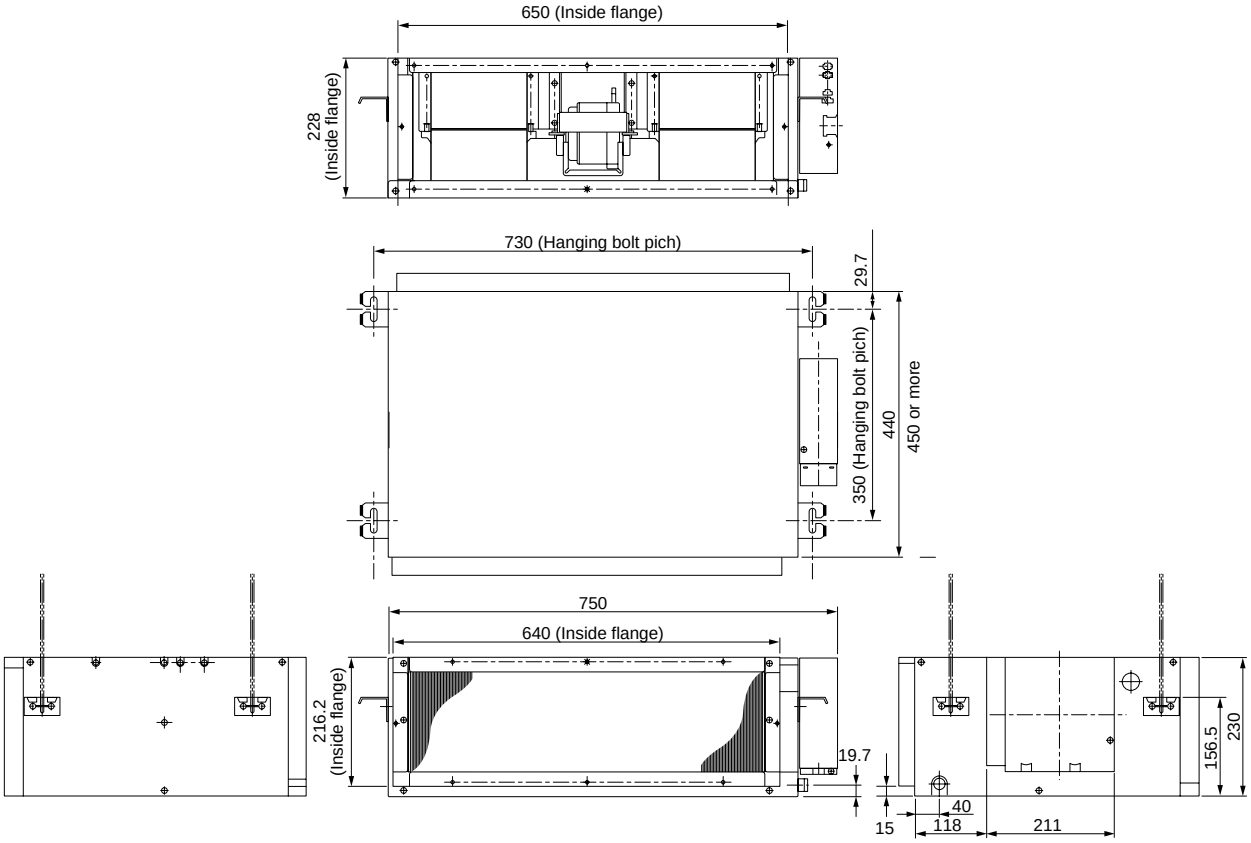

Fig. 9-3-3

1. Hanging down of indoor unit

Refer to installation figures of hanging material and hanging bolt.

- Adjustment of hanging bolt length and nut position

  Adjust hanging bolt length and nut position as shown in the figure below before hanging down the indoor unit.

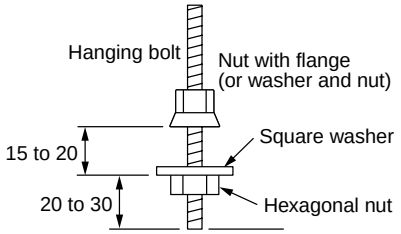

Fig. 9-3-4

NOTE :

Be sure to set the indoor unit horizontally so as not to cause malfunction of the float switch (Option) or leakage of water.

Considering pipe/wire connecting work inside the ceiling after the indoor unit has been hanged, select an installation place and determine piping direction.

- If the ceiling has been already set, lead refrigerant pipe, drain pipe, connecting wire, switch panel cord, etc. up to the place where pipe and wire are connected before hanging the main unit.

Downloaded from www.Manualslib.com manuals search engine

[Concealed duct type]

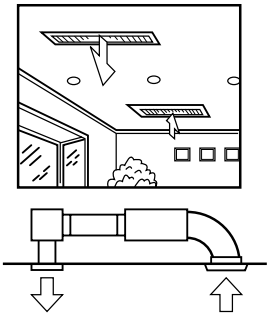

Fig. 9-3-5

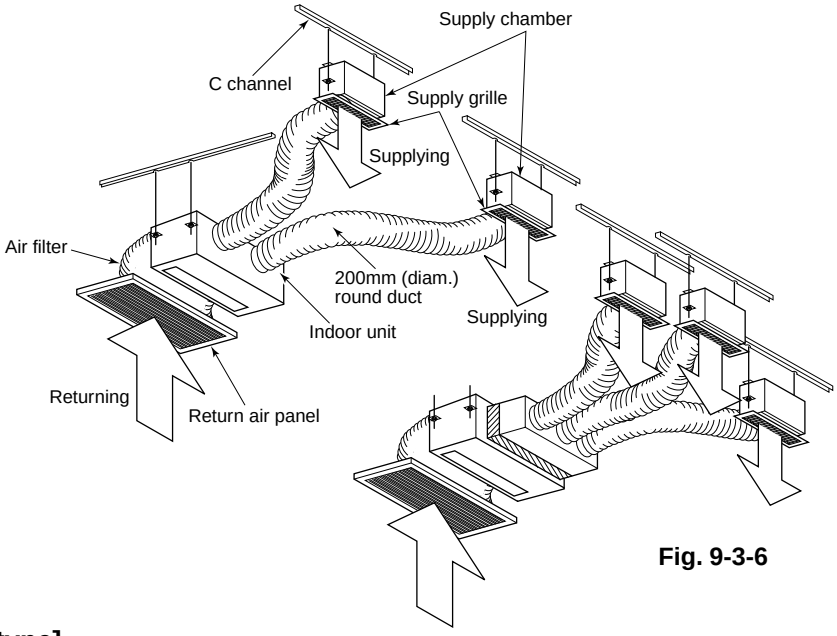

Fig. 9-3-6

[Ledge ceiling concealed duct type]

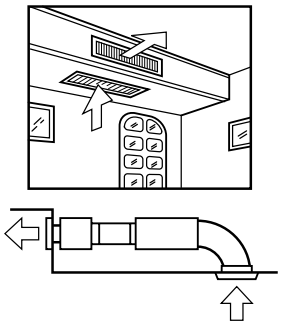

Fig. 9-3-7

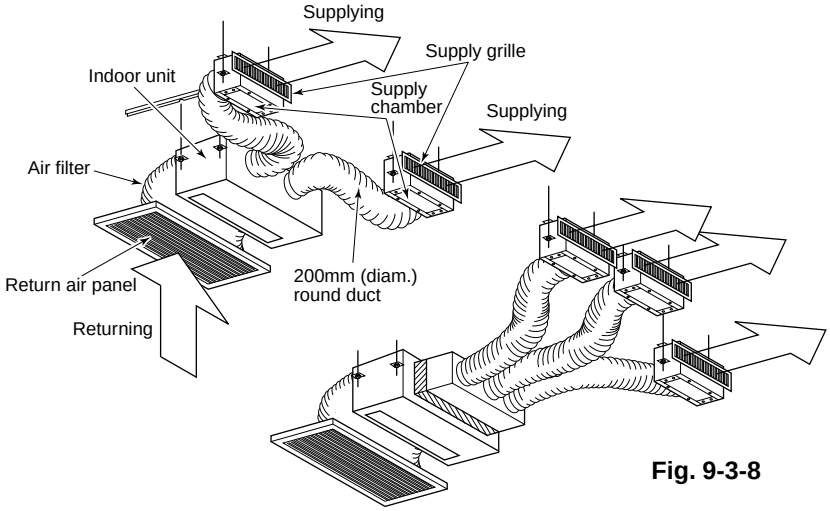

Fig. 9-3-8

NOTE :

- Opening area of the return grille should be larger than one of the return port of the indoor unit.

9-3-2. Restriction to Installation

1. Installation space

- As shown in the figure, keep space around the indoor unit.

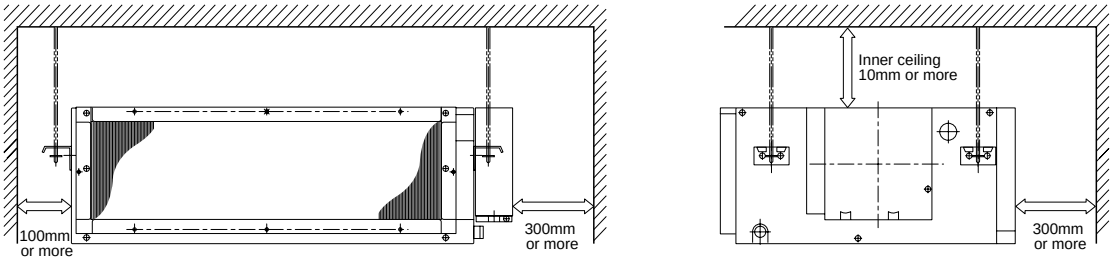

Fig. 9-3-9

Downloaded from www.Manualslib.com manuals search engine

9-4. Air Ducting Work

9-4-1. Static Pressure Characteristics of Each Model

Fig. 9-4-1 RAS-M10GDCV-E, RAS-M10GDV-E

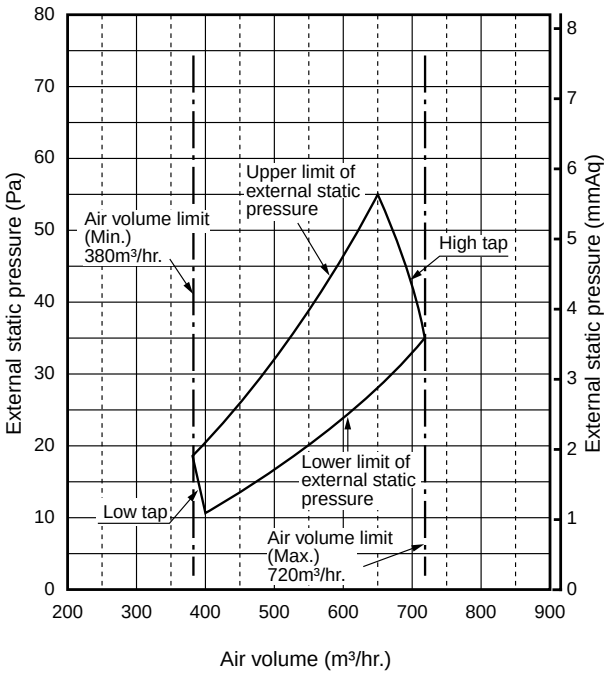

Fig. 9-4-3 RAS-M16GDCV-E, RAS-M16GDV-E

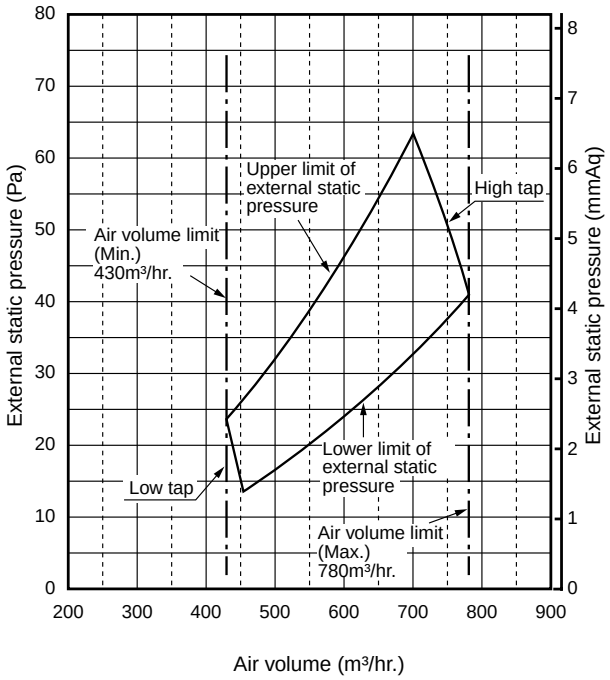

Fig. 9-4-2 RAS-M13GDCV-E, RAS-M13GDV-E

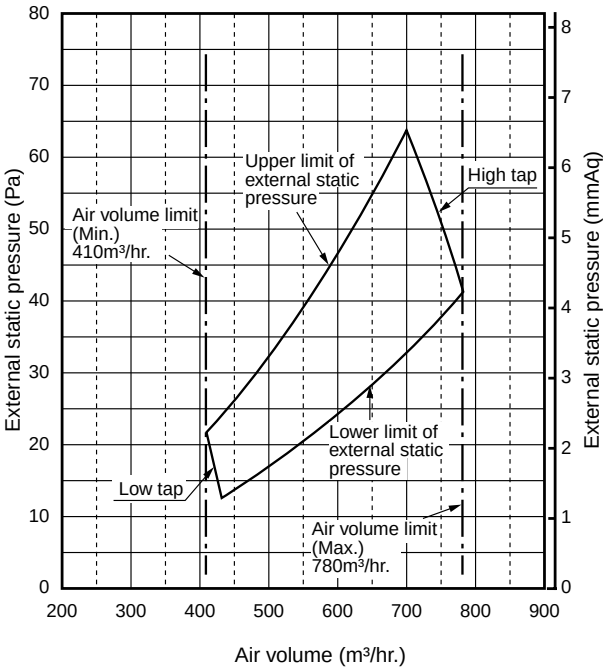

Model RAS-		M10GDCV-E M10GDV-E	M13GDCV-E M13GDV-E	M16GDCV-E M16GDV-E
Max. capacity point	**Air volume**	650	700	700
	Static pressure	54.9 (5.6)	63.7 (6.5)	63.7 (6.5)
Max. air volume	**Air volume**	720	780	780
	Static pressure	35.3 (3.6)	41.2 (4.2)	41.2 (4.2)
Min. capacity point	**Air volume**	400	430	450
	Static pressure	10.8 (1.1)	12.7 (1.3)	13.7 (1.4)
Min. air volume	**Air volume**	380	410	430
	Static pressure	18.6 (1.9)	21.6 (2.2)	23.5 (2.4)

Unit for static pressure : Pa (mmAq)
Unit for air volume : m³/hr.

Downloaded from www.Manualslib.com manuals search engine

9-4-2. Installation Reference

The air supply ducting work is classified into two ways, one is branched by the square ducts, and the other is branched by the round ducts. (Be sure to divide the air supply duct into three or more branches.)

[Square duct]

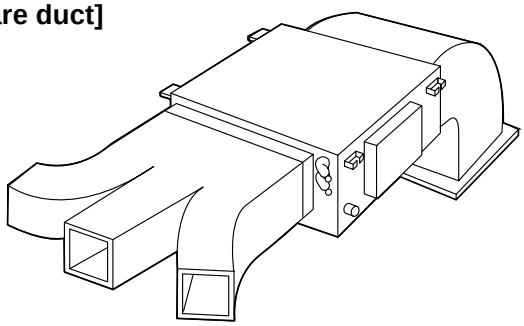

Fig. 9-4-4

[Round duct]

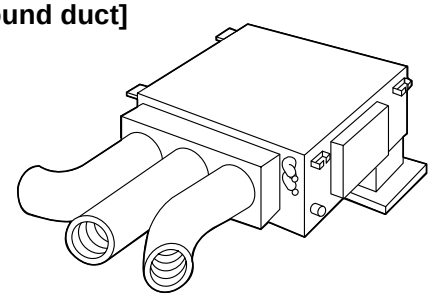

Fig. 9-4-5

In case of using the square duct, apply the thermal insulator of thickness by 25mm or more to the duct board. For the thermal insulator, use high-density glass wool of weight by 64kg/m³.

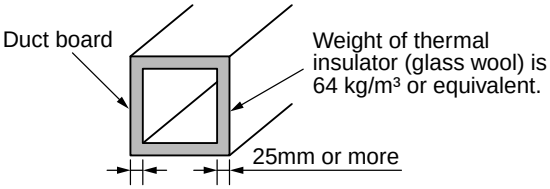

Fig. 9-4-6

In case of using the round duct, use the thermal insulator of thickness by 25mm or more and inner diameter by 150mm or more to the duct board. (If the inner diameter is not enough, resistance generates, as the result, air does not flow smoothly and loss of the static pressure increases.) For the thermal insulator, use high-density glass wool of weight by 24kg/m³ or equivalent.

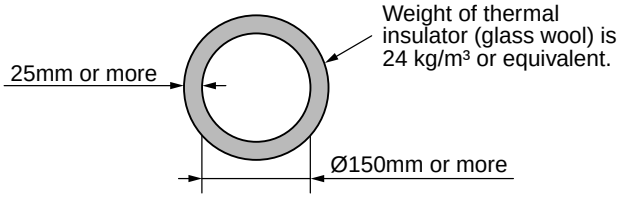

Fig. 9-4-7

9-4-3. Connecting Method of the Duct

1. Supply air side

1) Using 6 screws, mount the flange to the supply air port of the indoor unit. (Fig. 9-4-8)
2) Make the square duct according to inner dimension of the flange. A x B .
   Use a glass wool board with inside/outside finishing by 25mm-thickness and 64kg/m³-density.
3) Connect the flange and each type of duct. (Fig. 9-4-9)

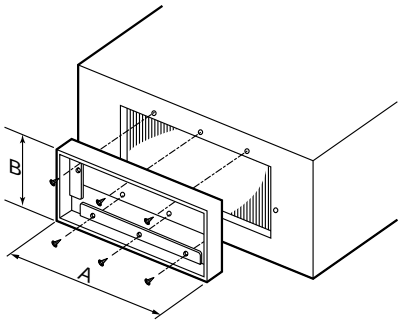

Fig. 9-4-8

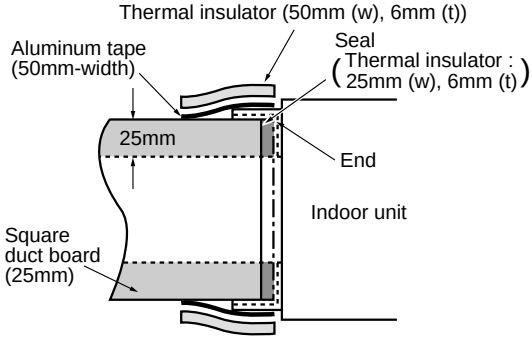

Fig. 9-4-9

CAUTION

Incomplete thermal insulation of the supply air flange and sealing may occur dewing resulted in falling of water drop.

Downloaded from www.Manualslib.com manuals search engine

[Square duct]

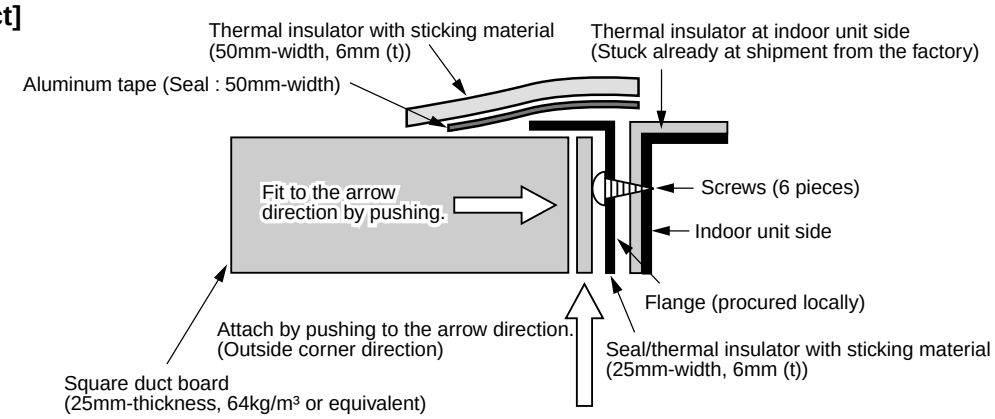

Fig. 9-4-10

[Round duct]

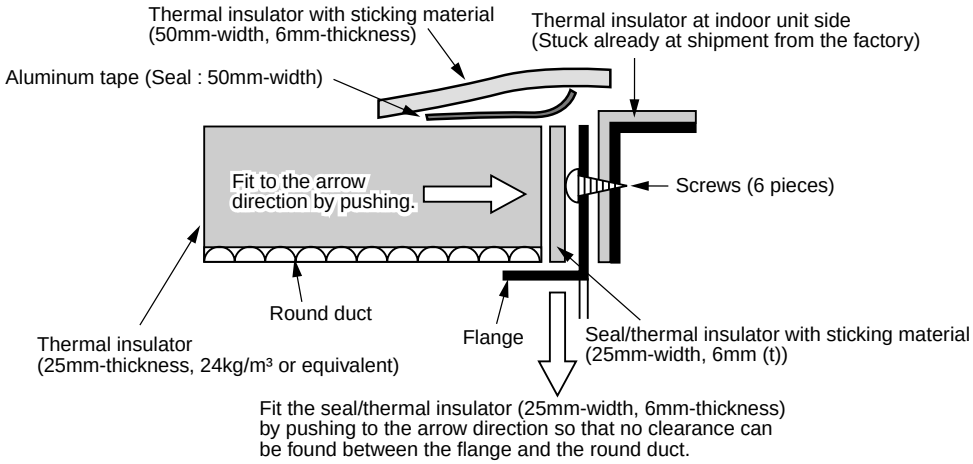

Fig. 9-4-11

9-4-4. Caution for Safety

1. Return air side

When you do not connect the duct to the return air side (using steel and others), apply a protective measures so that your hands or fingers do not directly touch with the motor or other electric parts.

1. Return air from rear side
   1) Follow the procedure same as that for the supply air side.
      Flange mounting → Square duct making → Connecting work
2. Return air from lower side
   1) Remove the cover for return air at the lower side of the indoor unit, and attach the cover to the opening port at the rear side of the indoor unit.

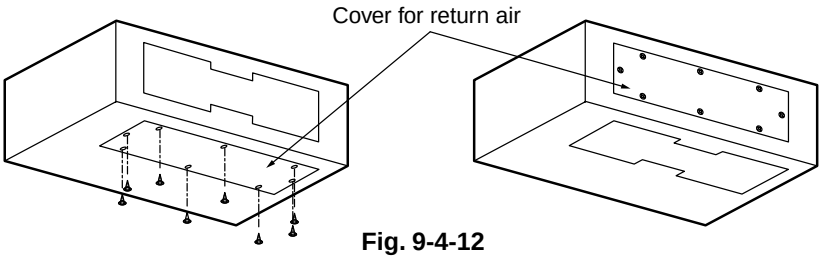

Fig. 9-4-12

   2) Mount the flange to the place from where the cover for return air was removed.
   3) Mount the square duct.
   4) Arrange the flange and the square duct.

Downloaded from www.Manualslib.com manuals search engine

9-4-5. Points at Installation Work

1. General cautions

1. Considering installation places of indoor unit and supply chamber, and structure of the building, determine the duct path.
2. In order to utilize the static pressure characteristics of the air supply in the indoor unit, design the duct branching by setting size up to the air supply chamber or by setting length to the first branch as long as possible (Min: 200mm or longer) so that an even air volume can be obtained.

   Especially, when setting the branching point just after air supplying of the indoor unit, air concentrates at the center part and air is difficult to flow to the ducts at both sides.
3. Connect each connecting section surely, and apply sufficient thermal insulation.

   In this model which the duct is branched in the ceiling, compared with the general houses, the high temperature generates on the periphery in the cooling time (Especially, at attic and etc.), temperature difference increases between the supply air and outside of the duct, and dewing may occur.

   Dewing on the surface of the thermal insulator covering exposure of the metal connecting section or leaking portion of the cooling air may cause a trouble such as falling of water drop.
4. Thermal insulation of screwing sections is necessary.

   Avoid dewing by applying thermal insulation to 6 screws which fix the duct flange of the air supply chamber.

   - For duct parts, the flexible branch duct (thermal insulation, 25mm or more thickness) is recommended.
   - Adjust the duct length to 6m or less even for straight pipe, and avoid sudden bending (Part resistance is large.) if bending.

[Return air flange]

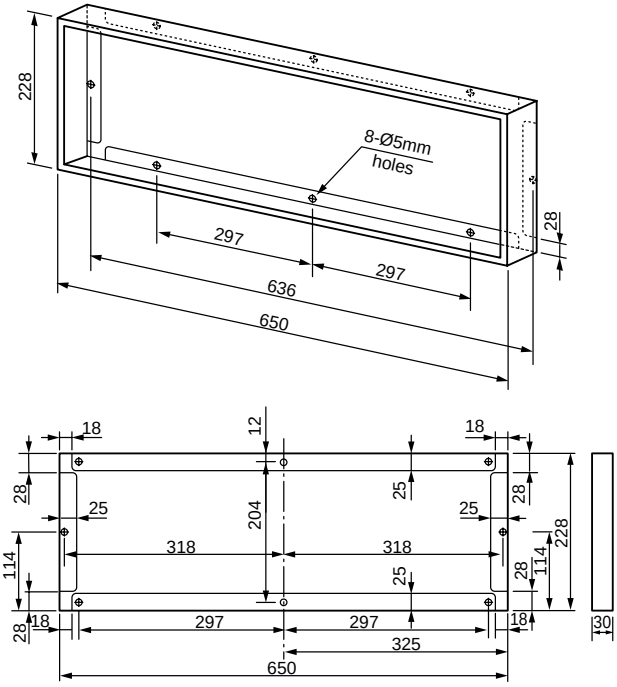

[Supply air flange]

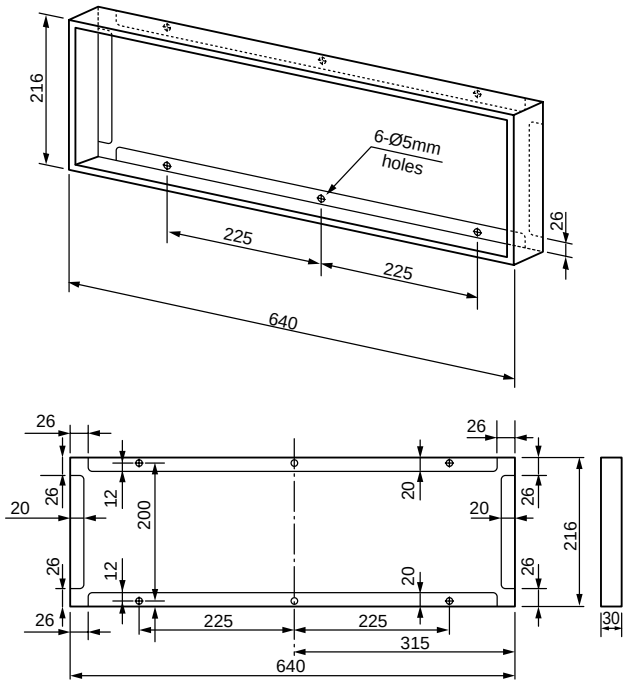

Fig. 9-4-13

Downloaded from www.Manualslib.com manuals search engine

9-5. Drain Piping Work

9-5-1. Piping Material

- For laying pipes under ground, use hard vinyl chloride pipe. (Inner diam. 20 or 25mm)

9-5-2. Piping and Cautions

- Set drain side of pipe at downward slope. (1/100 or more)
- Be sure to apply thermal insulation (foaming polyethylene, 10mm-thickness or more) for pipes passing through the room.
- Adhere the connecting sections with vinyl chloride agent surely so that no water leakage is caused.
- Support the piping with hanging bracket so that force is not applied to connection sections of pipe and pipe is not waved with connected pipes.

NOTES :

- Do not make slack or trap at halfway of pipes.
- Set pipes so that the end of drain pipe is not dipped in water, and also keep space with 50mm or more to the ground.
- After piping work, check water drains smoothly.
- Hole should be made at a slight downward slant to the outdoor side.
- When connecting extension drain hose, insulate the connecting part of extension drain hose with shield pipe.

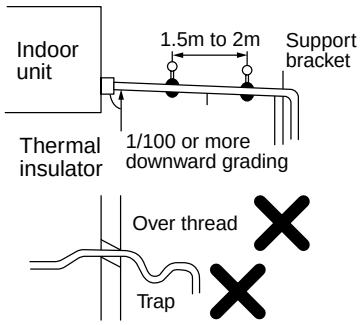

Fig. 9-5-1

- As shown in the figure, set the collective piping such as the ceiling duct so that waste water does not back up from the main pipe.

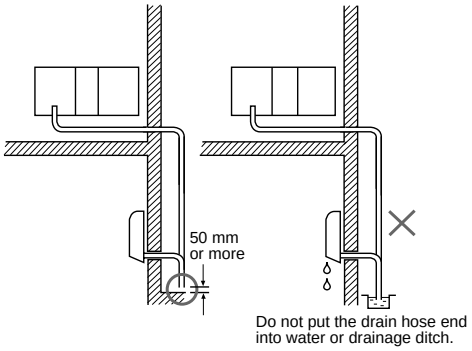

Fig. 9-5-2

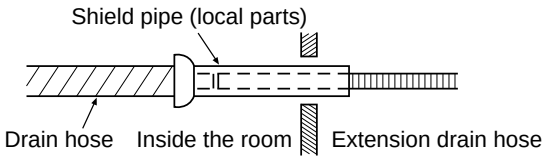

Fig. 9-5-3

9-5-3. Connection of the Drain Hose

- Insert the drain hose completely into the connecting port of the drain pan.
- Apply thermal insulation surely to the drain hose with elbow thermal insulation cover.

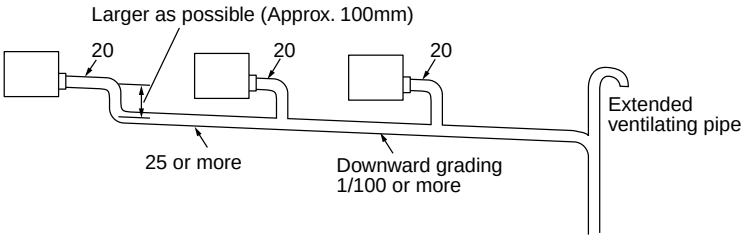

Fig. 9-5-4

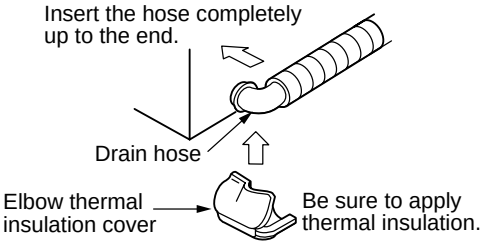

Fig. 9-5-5

Drain kit (Option)

For drain-up kit installation.

Refer the installation manual supplied with the drain-up kit.

Downloaded from www.Manualslib.com manuals search engine

9-6. Refrigerant Piping

9-6-1. Refrigerant Piping

1. If the outdoor units are to be mounted on a wall, make sure that the platform supporting is sufficiently strong. The platform should be designed and manufactured to maintain its strength over a long period of time, and sufficient consideration should be given to ensuring that the outdoor unit will not fall.
2. **Use copper pipe with 0.8 mm or more thickness.**
3. Flare nut and flare works are also different from those of the conventional refrigerant.
   Take out the flare nut attached to the main unit of the air conditioner, and use it.

CAUTION

IMPORTANT 4 POINTS FOR PIPING WORK

1. Take away dust and moisture from the inside of the connecting pipes.
2. Tight connection (between pipes and unit)
3. Evacuate the air in the connecting pipes using VACUUM PUMP.
4. Check the gas leakage. (connected points)

[Flaring]

Insert a flare nut into the pipe, and flare the pipe.

As the flaring sizes of R410A differ from those of refrigerant R22, the flare tools newly manufactured for R410A are recommended.

However, the conventional tools can be used by adjusting projection margin of the copper pipe.

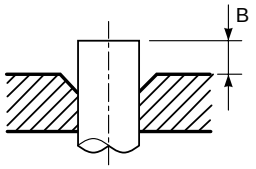

Fig. 9-6-1

- **Projection margin in flaring : B (Unit : mm)**

Rigid (Clutch type)

Outer diam. of copper pipe	R410A tool used		Conventional tool used	
	R410A	R22	**R410A**	R22
6.35	0 to 0.5	(Same as left)	1.0 to 1.5	0.5 to 1.0
9.52	0 to 0.5	(Same as left)	1.0 to 1.5	0.5 to 1.0
12.7	0 to 0.5	(Same as left)	1.0 to 1.5	0.5 to 1.0

Imperial (Wing nut type)

Outer diam. of copper pipe	**R410A**	R22
6.35	1.5 to 2.0	1.0 to 1.5
9.52	1.5 to 2.0	1.0 to 1.5
12.7	2.0 to 2.5	1.5 to 2.0

- **Flaring size : A (Unit : mm)**

Outer diam. of copper pipe	$A^{+0}_{-0.4}$	
	R410A	R22
6.35	9.1	9.0
9.52	13.2	13.0
12.7	16.6	16.2

* In the case of flaring for R410A with the conventional flare tool, pull out it approx. 0.5 mm more than that for R22 to adjust to the specified flare size.
The copper pipe gauge is useful for adjusting projection margin size.

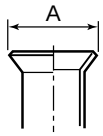

Fig. 9-6-2

[Tightening connection]

Align the centers of the connecting pipes and tighten the flare nut as far as possible with your fingers.
Then tighten the nut with a spanner and torque wrench as shown in the figure.

CAUTION

- Do not apply excess torque. Otherwise, the nut may crack depending on the conditions.

(Unit : N•m)

Outer diam. of copper pipe	Tightening torque
6.35 mm (diam.)	14 to 18 (1.4 to 1.8 kgf•m)
9.52 mm (diam.)	33 to 42 (3.3 to 4.2 kgf•m)
12.7 mm (diam.)	50 to 62 (5.0 to 6.2 kgf•m)

- **Tightening torque of flare pipe connections**

Pressure of R410A becomes higher than that of R22.
(Approx. 1.6 times) Therefore, using a torque wrench, tighten firmly the flare pipe connecting sections which connect the indoor and outdoor units up to the specified tightening torque.
Incorrect connections may cause not only a gas leakage, but also a trouble of the refrigeration cycle.

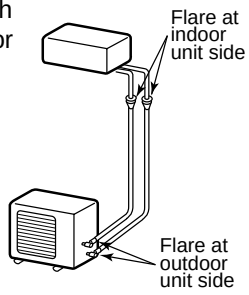

Fig. 9-6-3

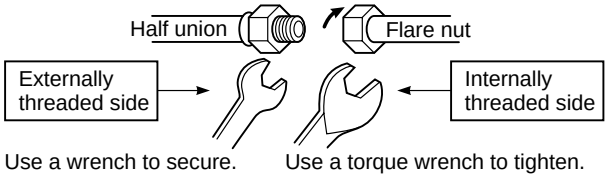

Fig. 9-6-4

Downloaded from www.Manualslib.com manuals search engine

9-7. Evacuating

AIR PURGE

Evacuate the air in the connecting pipes and in the indoor unit using vacuum pump.
Do not use the refrigerant in the outdoor unit.
For details, see the manual of vacuum pump.

[Use a vacuum pump]

Be sure to use a vacuum pump with counter-flow prevention function so that inside oil of the pump does not flow backward into pipes of the air conditioner when the pump stops.

1. Connect the charge hose from the manifold valve to the service port of the gas side packed valve.
2. Connect the charge hose to the port of vacuum pump.
3. Open fully the low pressure side handle of the gauge manifold valve.
4. Operate the vacuum pump to start for evacuating.
   Perform evacuating for about 35 minutes if the piping length is total 70 meters.
   (25 minutes for total 50 meters)
   (assuming a pump capacity of 27 liters per minute.)
   Then confirm that the compound pressure gauge reading is –101 kPa (–76 cmHg).
5. Close the low pressure side valve handle of gauge manifold.
6. Open fully the valve stem of the packed valves (both sides of Gas and Liquid).
7. Remove the charging hose from the service port.
8. Securely tighten the caps on the packed valves.

[Packed valve handling precautions]

- Open the valve stem all the way out ; do not try to open it beyond the stopper.
- Securely tighten the valve stem cap in torque as follows:

Gas side (12.7 mm (diam.))	50 to 62 N•m (5.0 to 6.2 kgf•m)
Gas side (9.52 mm (diam.))	33 to 42 N•m (3.3 to 4.2 kgf•m)
Liquid side (6.35 mm (diam.))	14 to 18 N•m (1.4 to 1.8 kgf•m)
Service port	14 to 18 N•m (1.4 to 1.8 kgf•m)

[Hexagonal wrench is required.]

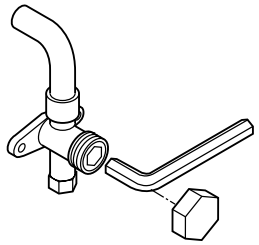

Fig. 9-7-1

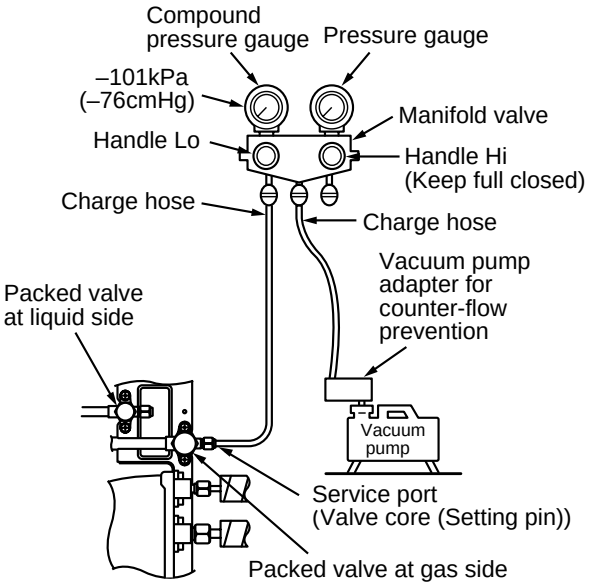

Fig. 9-7-2

Downloaded from www.Manualslib.com manuals search engine

9-8. Electrical Work

For the air conditioner that has no power cord.

NOTE:

For selection and connection method of the power supply cords, refer to the details in the Installation Manual of the outdoor unit.

CAUTIONS

- Use a circuit breaker of a type that is not tripped by shock waves.
- If incorrect/incomplete wiring is carried out, it will cause an electrical fire or smoke.
- Prepare the power supply for exclusive use with the air conditioner.
- This product can be connected to the mains.

  Connection to fixed wiring :
  A switch or circuit breaker which disconnects all poles and has a contact separation of at least 3 mm must be incorporate in the fixed wiring.
  An approved short circuit breaker or switches must be used.

  * (A breaker having a sensitivity of approximately 0.1 second or less and a capacity of approximately 30 mA is usually used.)
- Be sure to use the cord clamps specified positions with attached to the product.
- Do not damage or scratch the conductive core and inner insulator of power and inter-connecting cables when peeling them.
- Be sure to comply with local cords on running the wire from outdoor unit to indoor unit (size of wire and wiring method etc.)
- Use the power cord and Inter-connecting cable with specified thickness, specified type, and protective devices specified.

[How to wire]

1. Connect the connecting cable to the terminal as identified with their respective matched numbers on the terminal block of indoor and outdoor unit. H07 RN-F or 245 IEC 66 (1.0 mm^2)
2. When connecting the connecting cable to the outdoor unit terminal, prevent water coming in the outdoor unit.
3. Insulate the unused cords (conductors) stripped the sheath of connecting cable with PVC tape. Process them so that they do not touch any electrical or metal parts.
4. For inter-unit wiring, do not use a cut wire jointed to another on the way.

[Cabling]

1. As shown in the figure, remove a screw ① and then remove cover of the terminal block.
2. Remove two screws ② and pull the parts box while lifting up it.
3. Strip wire ends (10 mm).
4. Match wire colors with terminal numbers on indoor and outdoor units' terminal blocks and firmly screw wires to the corresponding terminals.
5. Connect the ground wires to the corresponding terminals.
6. Fix the cable with cord clamp.
7. Fix the parts box and the terminal block surely with the fixing screws.

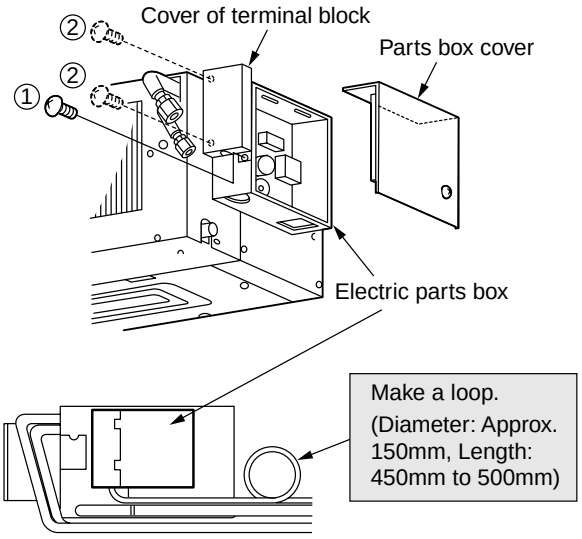

Make a loop on the cable for margin of the length so that the electric parts box can be taken out during servicing.

Fig. 9-8-1

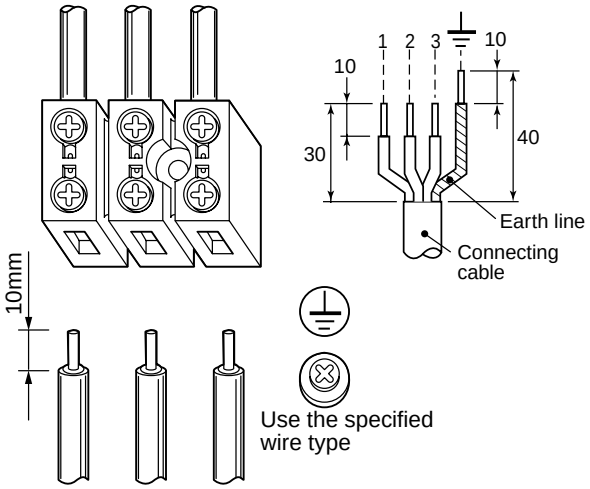

Fig. 9-8-2

Downloaded from www.Manualslib.com manuals search engine

9-8-1. Check and Test Operation

Be sure to test the piping connections for gas leaking.

- Check the flare nut connections, valve stem cap connections and service port cap connections for gas leak with a leak detector or soap water.

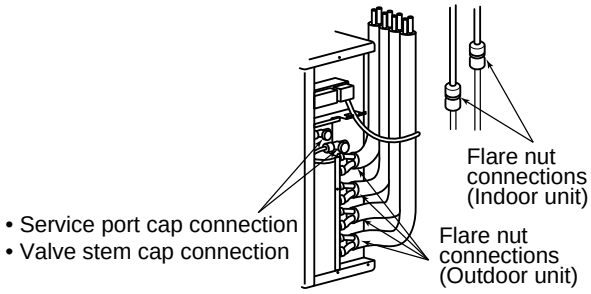

Fig. 9-8-3

9-8-2. Setup of Selector Switch on Switch Panel

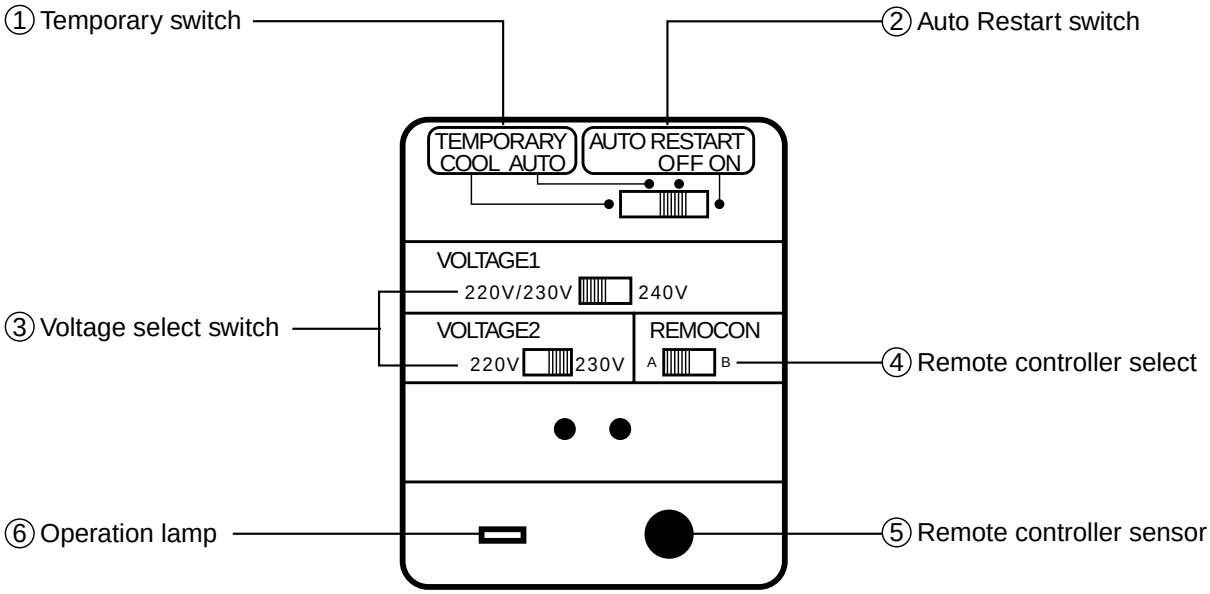

Fig. 9-8-4

① Temporary switch

For an temporary operation when the remote controller is not found or in a trial operation, set the TEMPORARY switch to COOL or AUTO side.

If setting the switch to COOL side, the cooling operation can be confirmed even while the thermostat is OFF when temperature of the return air is low.

② Auto Restart switch

The Auto Restart switch is useful for restarting the system when the outside power supply is unstable by an instantaneous power failure, etc. Do not use this switch when the unit itself is in trouble.

③ Using VOLTAGE1 and VOLTAGE2 switches, select an appropriate voltage according to supplied voltage. Voltage, 220V, 230V, or 240V can be selected.

④ REMOCON priority select switch

When the indoor units are nearly set, set both indoor unit and remote controller to A or B for selecting the priority.

⑤ Remote controller sensor

The remote controller sensor can receive a signal at position approx. 7m off.

⑥ Operation lamp

This lamp goes on during operation, and goes off during stop time, respectively.

Downloaded from www.Manualslib.com manuals search engine

9-9. Connection of Electric Wires

When you connect the wires to the terminals, be sure to loosen the parts box before work.

If an incomplete connection is done, a contact failure may be caused and resulted in a danger of an electric shock and so on.

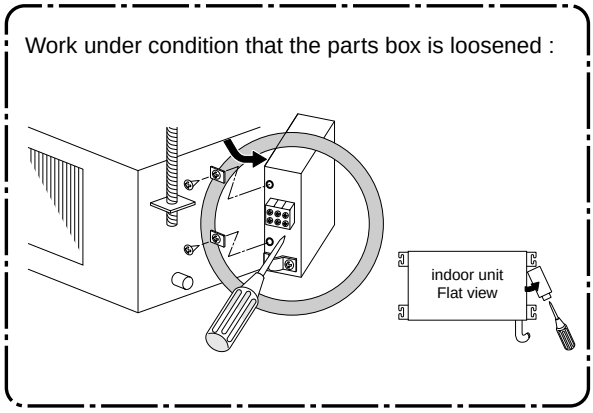

Correct way

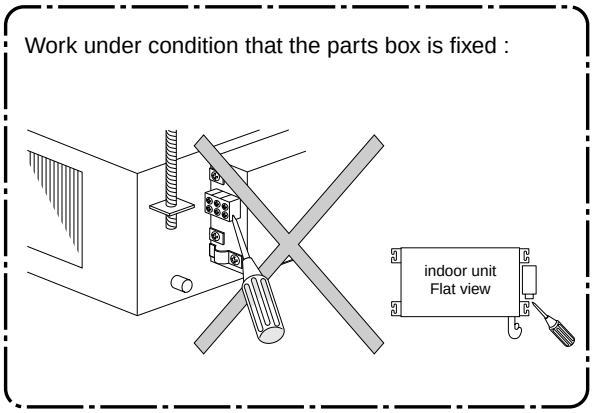

Incorrect way

9-10. Voltage Setting

The most suitable voltage can be set up by combining the VOLTAGE SELECT 1 with 2 when adjusting the voltage on the spot.

(Do not touch the switches at the installation time because an installation dealer will adjust them.)

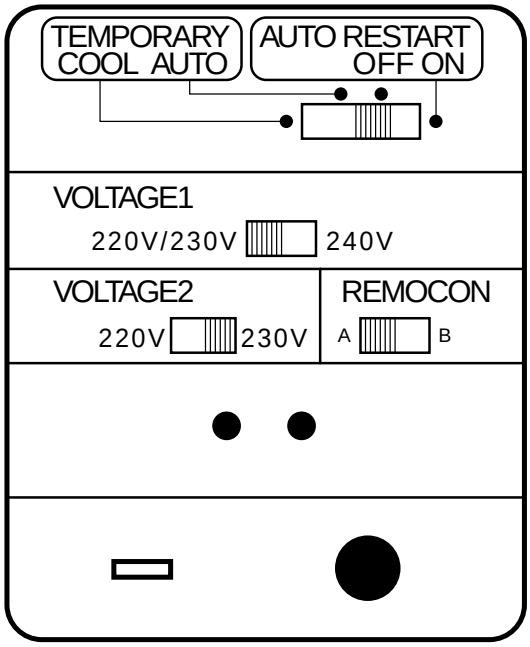

Supply voltage	Voltage select 1/Voltage select 2
220V	VOLTAGE1 220V/230V 240V
	VOLTAGE2 220V 230V
230V	VOLTAGE1 220V/230V 240V
	VOLTAGE2 220V 230V
240V	VOLTAGE1 220V/230V 240V
	VOLTAGE2 (Both are available.) 220V 230V 220V 230V

Downloaded from www.Manualslib.com manuals search engine

10. DRAIN-UP KIT (Option)

10-1. Instructions for Fitting out Drain-up Kit RB-F81E2

⚠ WARNINGS

- **Ask an authorized dealer or qualified installation professional to install the drain-up kit.**
  Inappropriate installation may result in water leakage, electric shock or fire.
- **Turn off the main power supply switch or breaker before attempting any electrical work.**
  Make sure all power switches are off. Failure to do so may cause electric shock.
- **Connect the connecting cable correctly.**
  If the connecting cable is connected by wrong way, electric parts may be damaged.

- Please read through this instructions before fitting accessories.

10-1-1. Specifications

Model	RB-F81E2
Power supply	1Ø, 220-240V, 50Hz / 220V, 60Hz
Power consumption	9 / 8 (W)
Discharge flow rate	450 / 530 (cc/min) (For 300 mm high pumping head)
Drain port dia.	VP20 (ID.: Ø20 mm, OD.: Ø26 mm)
Safety device	Float switch
Weight	2 kg
Outside dimensions	Height 200 mm x Width 170 + 75.5 mm x Depth 90 mm

10-1-2. Outline Drawing

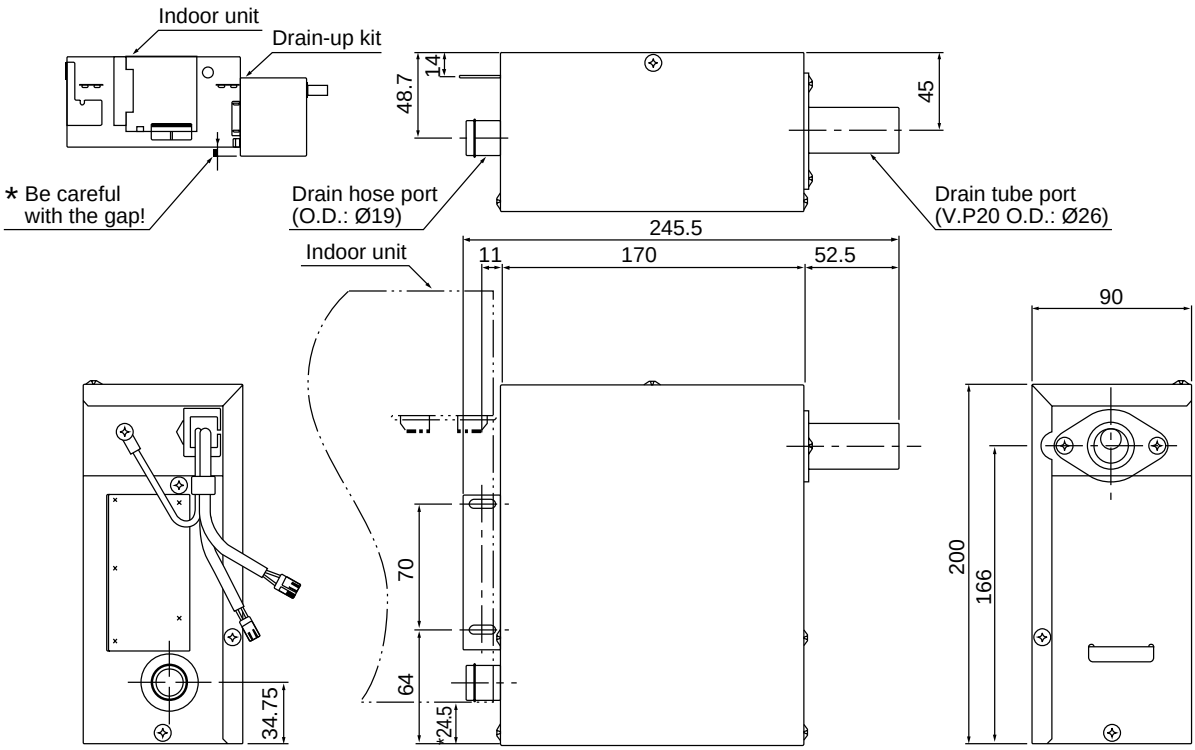

***NOTE** : That the drain-up kit affixed to the indoor unit is 24.5 mm lower than the bottom of the indoor unit.

Downloaded from www.Manualslib.com manuals search engine

10-1-3. Parts List

No.	①	②	③	④	⑤	⑥	⑦
Parts	Drain-up kit body	Insulated pipe	(Ø4 × 10l) Mounting screw	Drain pipe	Hose band	Installation manual	Drain hose holder
Q'ty	1	1	2	1	2	1	1

10-1-4. Installation Drawing

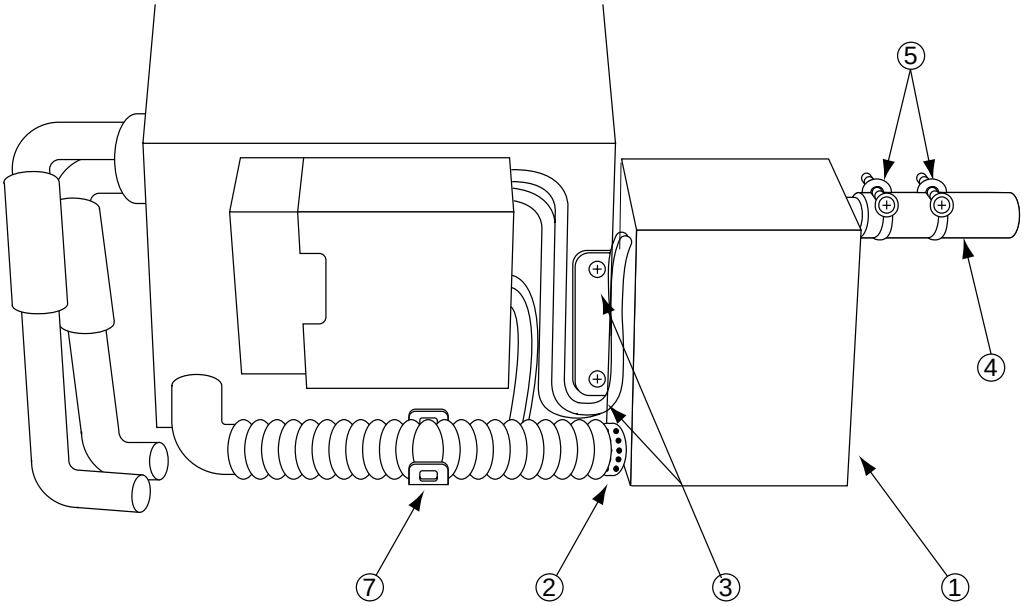

Keep the following in mind

- Follow steps described in this instructions to install correctively the drain-up kit. (otherwise water leak may occur)
- Make sure that the air conditioner is placed level or slopes down toward the drain port by 5mm or less.
- Make sure that the drain hose slopes down toward the drain-up kit.

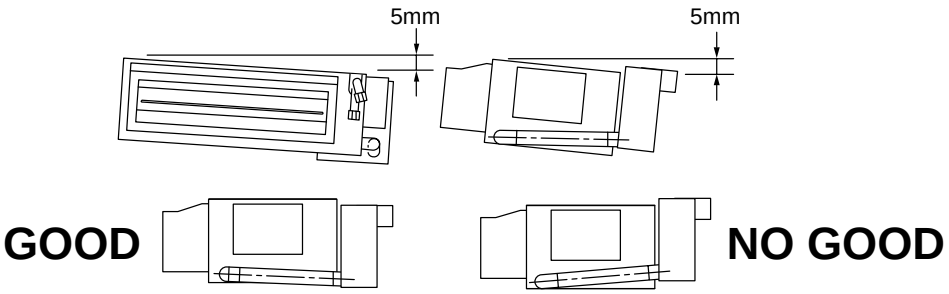

Downloaded from www.Manualslib.com manuals search engine

10-1-5. Installation Steps

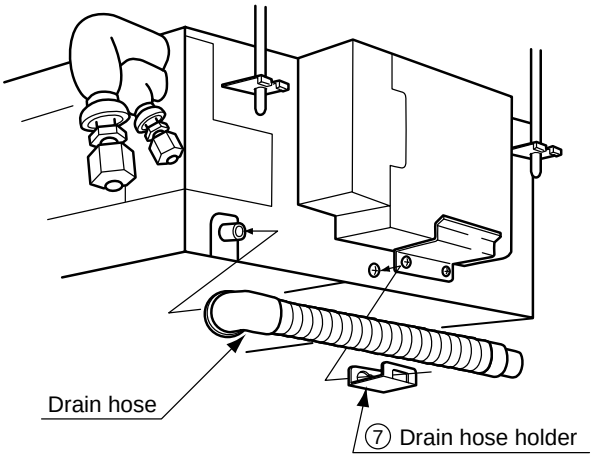

Fig. 10-1-1

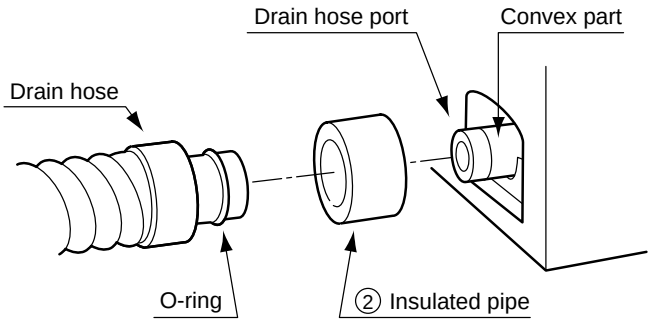

Fig. 10-1-3

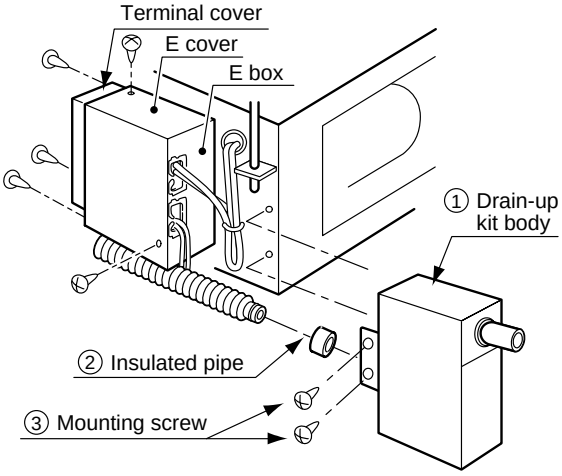

Fig. 10-1-2

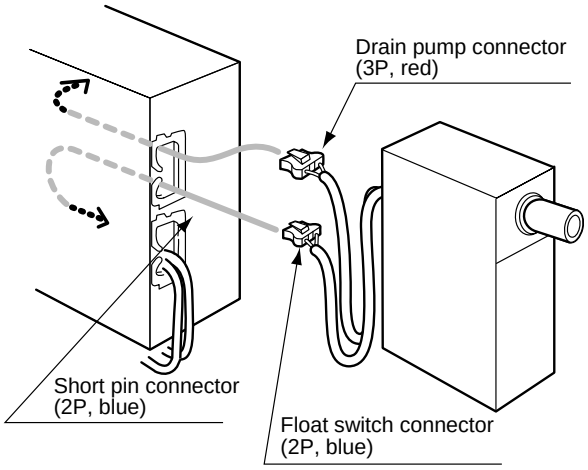

Fig. 10-1-4

1) Unfasten a set screw on the side of the indoor unit. Hook the drain hose holder ⑦ to the screw and fasten it together with the fitting. Make sure the drain hose is free from a trap, sag, etc. near the drain hose holder ⑦.
2) The joint for the drain hose port packaged with the indoor unit should be connected with the insulated pipe②.
3) Insert the pipe snugly into the drain hose port of the drain-up kit ①.
   (as deep into the port as the O-ring of the drain hose reaches the groove of the drain hose port)
4) Using two setscrews ③, secure the drain-up kit ① to the indoor unit.
5) Remove a set screw and Terminal cover. And remove two set screws on E cover.
6) Remove two set screws fixed E bix at the terminal side. So remove E cover while moving E box up.
7) Remove the short pin connector (2P, blue, CN07) in E box.
8) The float switch connector (2P, blue, CN07) and the drain pump connector (3P, red, CN06) in E box should be connected with the others on the board and near the filter appropriately.
9) Put each leads from the drain up kit in the upper holder of E box as indicated in the figure.
10) Fix E box, E cover and Terminal cover by each screws appropriately, as it was before.

Downloaded from www.Manualslib.com manuals search engine

Connection of Drain Tube

1. Fit the coupling pipe at both ends with a hose band.
2. Fit one end of the provided coupling pipe over the discharge port of the drain-up kit. Insert PVC tube VP-20 into the other end of the coupling pipe. Secure the connected pipe and the tube with a hose band.

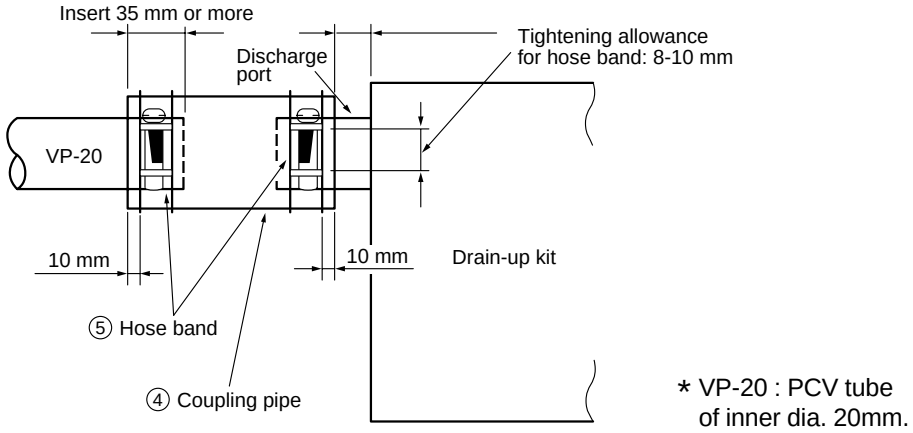

Fig. 10-1-5

3. Make sure that the coupling pipe is tightened 8-10 mm using the hose band.
4. Wrap the VP-20 drain tubing in the insulation material.
5. Wind the coupling pipe in the provided insulation covering with its joint facing upward. Using the hose band, tighten the insulation covering until there is no clearance left.
   - Use the hard PVC tube VP-20 for the drain tubing. Apply a PVC-based adhesive to joints to prevent water from getting out.
   - **Apply the insulation material (10 mm or thicker wall of formed polyethylene) to the drain tubing arranged indoor.**
   - Secure a section of the drain tubing near to the drain-up kit so that no unnecessary force is applied to the drain tubing.

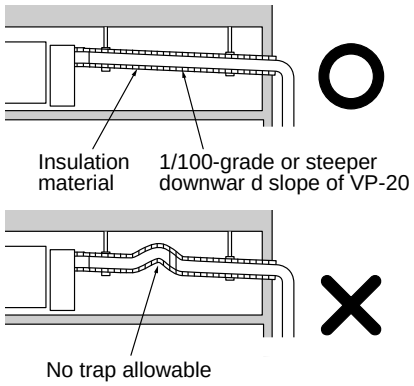

Fig. 10-1-6

* Finally allow the water from the heat exchanger to flow through the installed drain tube to make sure there is no problem with the drain system.

Keep the following in mind

- The drain tubing should have a downward slope (1/100 or steeper) toward the outlet. There may be no up-and-down or other intervening trap for the flowing water.
- The length of the drain tubing arranged horizontally must not exceed 15 meters.
- The drain tubing must not have an upward slope from the outlet of Drain-up kit.
- The end of the drain tube must not be immersed in water or located 50 mm or more above the ground.

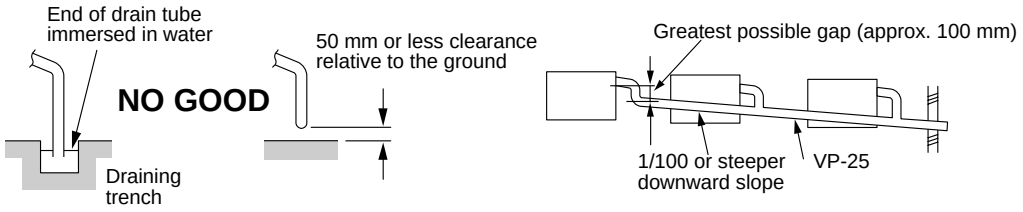

Fig. 10-1-7

Downloaded from www.Manualslib.com manuals search engine

11. HOW TO DIAGNOSE THE TROUBLE

11-1. First Confirmation

11-1-1. Confirmation of Power Supply

Confirm that the power breaker operates (ON) normally.

11-1-2. Confirmation of Power Voltage

Confirm that power voltage is AC 220–240V ± 10% (50Hz), AC 220V ± 10% (60Hz).
If power voltage is not in this range, the unit may not operate normally.

11-1-3. Operation Which is not a Trouble (Program Operation)

For controlling the air conditioner, the program operations are built in the microcomputer as described in the following table. If a claim is made for running operation, check whether or not it meets to the contents in the following table. When it does, we inform you that it is not trouble of equipment, but it is indispensable for controlling and maintaining of air conditioner.

Table 11-1-1

No.	Operation of air conditioner	Description
1	When power breaker is turned “ON”, the operation lamp (Green) of the indoor unit (switch panel) flashes.	The OPERATION lamp of the indoor unit (switch panel) flashes when power source is turned on. If “START/STOP” button is operated once, flashing stops. (Flashes also in power failure)
2	Compressor may not operate even if the room temperature is within range of compressor-ON.	The compressor does not operate while compressor restart delay timer (3-minutes timer) operates. The same phenomenon is found after power source has been turned on because 3-minutes timer operates.
3	In DRY and ECONO. mode, FAN ONLY (air flow) display does not change even though FAN (air flow select) button is operated.	The air flow indication is fixed to [AUTO].
4	The set value of the remote controller should be below the room temperature.	If the set value is above the room temperature, Cooling operation is not performed. And check whether battery of the remote controller is consumed or not.
5	In AUTO mode, the operation mode is changed.	After selecting Cool or Heat mode, select an operation mode again if the compressor keeps stop status for 15 minutes.
6	In HEAT mode, the compressor motor speed does not increase up to the maximum speed or decreases before the temperature arrives at the set temperature. (For Heat pump model only)	The compressor motor speed may decrease by high-temp. release control (Release protective operation by temp.-up of the indoor heat exchanger) or current release control.
7	Cool, Dry, or Heat operation cannot be performed. (For Heat pump model only)	When the selected operation mode in the room differs from one in the other room, the priority is given to the operation mode in the room where the operation has started previously. In this time, the indoor fan in the room where the operation mode was not given with priority stops. (Cool operation and Dry operation can be concurrently performed.)

11-2. Primary Judgment

To diagnose the troubles, use the following methods.

1. Judgment by flashing LED of indoor unit (switch panel)
2. Self-diagnosis by service check remote controller
3. Judgment of trouble by every symptom

Firstly use the method (1) for diagnosis. Then, use the method (2) or (3) to diagnose the details of troubles.

Downloaded from www.Manualslib.com manuals search engine

11-3. Judgment by Flashing LED of Indoor Unit (Switch Panel)

While the indoor unit monitors the operation status of the air conditioner, if the protective circuit operates, the contents of self-diagnosis are displayed with block on the indoor unit indication section.

Table 11-3-1

Indoor indication lamp flashes.

Which lamp does flash?

Item	Check code	Block display	Description for self-diagnosis
A	—	OPERATION (Green) Flashing display (1 Hz)	Power failure (when power is ON)
B	00	OPERATION (Green) Flashing display (5 Hz)	Protective circuit operation for indoor P.C. board
C	01	OPERATION (Green) TIMER (Yellow) Flashing display (5 Hz)	Protective circuit operation for connecting cable and serial signal system
D	02	OPERATION (Green) CHECK (Red) Flashing display (5 Hz)	Protective circuit operation for outdoor P.C. board
E	03	OPERATION (Green) TIMER (Yellow) CHECK (Red) Flashing display (5 Hz)	Protective circuit operation for others (including compressor)

NOTES :

1. The contents of items B and C and a part of item E are displayed when air conditioner operates.
2. When item B and C, and item B and a part of item E occur concurrently, priority is given to the block of item B.
3. The check codes can be confirmed on the remote controller for servicing.
4. For judgment and measures of the outdoor units, refer to the service manual of the outdoor unit to be combined.

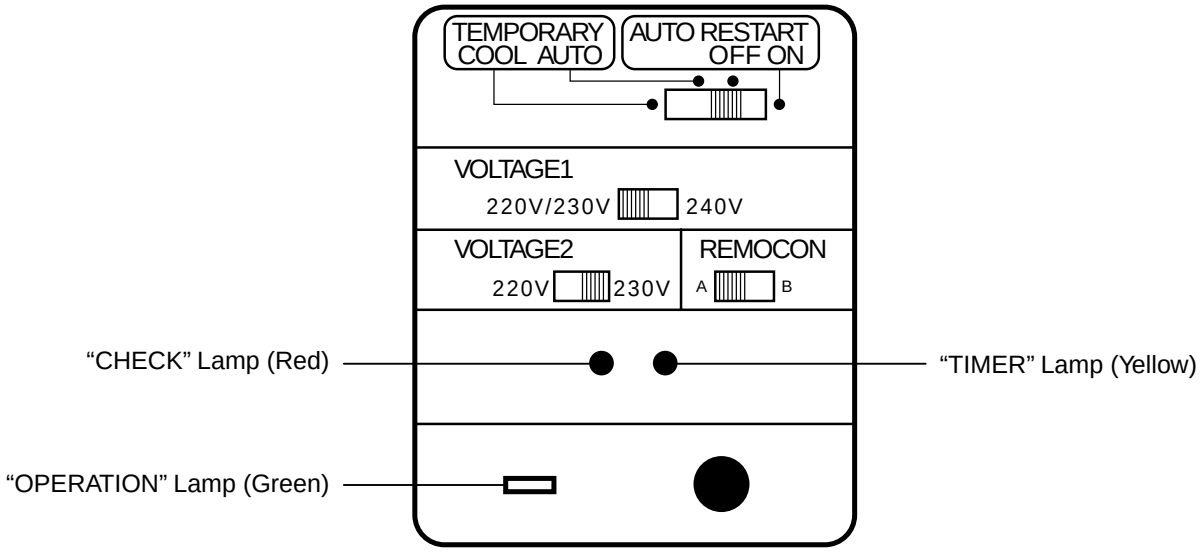

NOTE :

To check the indoor unit, remove both attached cap by finger of "CHECK" and "TIMER" lamps.

Fig. 11-3-1 Switch panel

Downloaded from www.Manualslib.com manuals search engine

11-4. Self-Diagnosis by Remote Controller (Check Code)

1. The self-diagnosis by the check code is performed while items B to E blocks are displayed.
2. When turning the operation mode on the remote controller to the service mode, and operating the remote controller, the controller of the indoor unit can self-diagnose operation of the protection circuit by displayed contents (check code) on the remote controller, by whether all the lamps flash (5Hz) and the receiving sound (Beep, Beep, Beep ... for 10 seconds) is heard. The timer lamp usually flashes (5Hz) during self-diagnosis.

11-4-1. Self-Diagnosis

1. Wireless remote controller

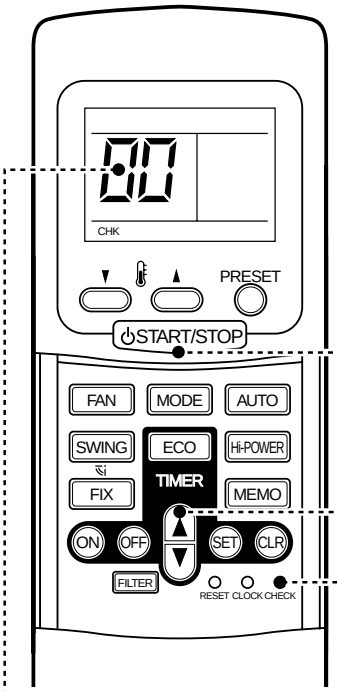

Alphanumeric characters are used for the check codes.

5 is 5.	6 is 6.
A is A.	b is B.
C is C.	d is D.

1 **Push the CHK button by something with thin edge.**

- Check 00 is displayed in the indication part of the remote controller.

2 **Push ▲ toward the indoor unit one by one.**

If it is normal, the receiving sound "Beep" is heard every pushing it and check code in the indication part of the remote controller changes.

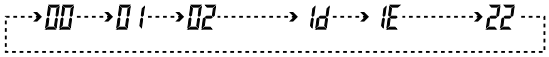

The timer lamp of the air conditioner flashes. (5 times for 1 second)

- Check all of 35 check codes (00 to 22).
- Push ▼ to return to the objective code if passed.

If a trouble occurs, the receiving sound "Beep" changes to Beep, Beep, Beep (continues for approx. 10 seconds). Check the check code in the indication part of the remote controller.

- 2-digits alphanumeric characters are displayed in the indication part of the remote controller.
- All the lamps of the air conditioner flash (5 times for 1 second).

3 **To release the self-diagnosis function, push START/STOP button.**

Pushing the button once displays the operation stop, and pushing the button twice returns the display before check.

Fig. 11-4-1

Downloaded from www.Manualslib.com manuals search engine

11-4-2. Caution at Servicing

1. After servicing, push the START/STOP button to return to the normal mode.
2. After servicing by the check code, turn off breaker of the power supply, and turn on breaker of the power supply again so that memory in the microcomputer returns the initial status. However, the check codes are not deleted even if the power supply is turned off because they are stored in the fixed memory.

Table 11-4-1

Block distinction		Operation of diagnosis function				Judgment and action
Check code	Block	Check code	Cause of operation	Air conditioner status	Condition	
00	Indoor P.C. board etc.	0C	Short-circuit or disconnection of the room temperature sensor (TA sensor).	Operation continues.	Displayed when error is detected.	1. Check the room temp. sensor. 2. When the room temp. sensor is normal, check P.C. board.
		0d	Being out of place, disconnection, short-circuit, or migration of heat exchanger sensor (TC sensor)	Operation continues.	Displayed when error is detected.	1. Check heat exchanger sensor. 2. When heat exchanger sensor is normal, check P.C. board.
		11	Lock of indoor fan or trouble on the indoor fan circuit	All off	Displayed when error is detected.	1. Check P.C. board. 2. When P.C. board is normal, check the motor.
		0b (Only when drain-up kit (option) is connected)	Float SW operation	Operation continues. (Outdoor units stop.)	Displayed when error is detected.	1. Check the drainage. (1) Amount of residual drain. (2) Drain water piping installation situation. 2. Float SW operation check 3. Check disconnection of connector.
		12	Trouble on other indoor P.C. boards	Operation continues.	Displayed when error is detected.	Replace P.C. board.
01	Connecting cable and serial signal	04	Return serial signal is not sent to indoor side from operation started. (1) Defective wiring of connecting cable (2) Operation of compressor thermo. Gas shortage Gas leak	Operation continues.	Flashes when trouble is detected on return serial signal, and normal status when signal is reset.	1. When the outdoor unit never operate: (1) Check connecting cable, and correct if defective wiring. (2) Inverter check 2. To display [Other] block during operation, check compressor thermo. operation and supply gas (check gas leak also). 3. Unit operates normally during check. If return serial signal does not stop between indoor terminal board 2 and 3, replace inverter P.C. board. If signal stops between indoor terminal board 2 and 3, replace indoor P.C. board.

Downloaded from www.Manualslib.com manuals search engine

Block distinction		Operation of diagnosis function				Judgment and action
Check code	Block	Check code	Cause of operation	Air conditioner status	Remarks	
02	Outdoor P.C. board	14	Inverter over-current protective circuit operates. (Short time)	All off	Displayed when error is detected.	Even if trying operation again, all operations stop immediately. : Replace P.C. board.
		16	Position-detect circuit error or short-circuit between windings of compressor	All off	Displayed when error is detected.	1. Even if connecting lead wire of compressor is removed, position-detect circuit error occurred. : Replace P.C. board. 2. Measure resistance between wires of compressor, and perform short-circuit. : Replace compressor.
		17	Current-detect circuit error	All off	Displayed when error is detected.	Even if trying operation again, all operations stop immediately. : Replace P.C. board.
		18	Being out of place, disconnection or short-circuit of outdoor temp. sensor	All off	Displayed when error is detected.	Check 5-serial LED. *1 1. Check outdoor temp. sensors. (TE, TS) 2. Check P.C. board.
		19	Disconnection or short-circuit of discharge temp. sensor	All off	Displayed when error is detected.	1. Check discharge temp. sensor (TD). 2. Check P.C. board.
		1A	Outdoor fan drive system error	All off	Displayed when error is detected.	Position-detect error, over-current protective operation of outdoor fan drive system, fan lock, etc. : Replace P.C. board or fan motor.
	Not dis-played	1b	Outdoor temp. sensor error	Operation continues.	——	1. Check outdoor temp. sensor (TO). 2. Check P.C. board.
	Outdoor P.C. board	1C	Compressor drive output error, Compressor error (lock, missing, etc.), Break down	All off	Displayed when error is detected.	Check 5-serial LED. *1 When 20 seconds passed after start-up, position-detect circuit error occurred. : Replace compressor.
			Error exclusive for multiple type	All off	Displayed when error is detected.	Check 5-serial LED. *1 1. Miswiring of connecting wire of A/B/C/D rooms in indoor/outdoor units 2. Check gas leakage. 3. Check disconnection of sensor. 4. Electronic control valve error
03	Others (including compressor)	1d	Compressor does not rotate. (Current protective circuit does not operate when a specified time passed after compressor had been activated.)	All off	Displayed when error is detected.	1. Trouble on compressor 2. Trouble on wiring of compressor (Missed phase)
		1E	Discharge temp. exceeded 120°C.	All off	Displayed when error is detected.	1. Check dischage temp. sensor (TD). 2. Degassing 3. Trouble on P.M.V.
		1F	Break down of compressor	All off	Displayed when error is detected.	1. Check power voltage. (50Hz / 220–240V ±10%, 60Hz / 220V ±10%) 2. Overload operation of refrigeration cycle Check installation condition (Short-circuit of outdoor diffuser).

*1 : For details, refer to the service manual of the outdoor unit to be combined.

Downloaded from www.Manualslib.com manuals search engine

11-5. Judgment of Trouble by Every Symptom

11-5-1. Indoor Unit (Including Remote controller)

(1) Power is not turned on (Does not operate entirely)

<Preliminary check>

1. Is the supply voltage normal?
2. Are the connection of the primary side and the secondary side of the power transformer inserted into the P.C. board?
3. Is the FUSE (F01) blown?

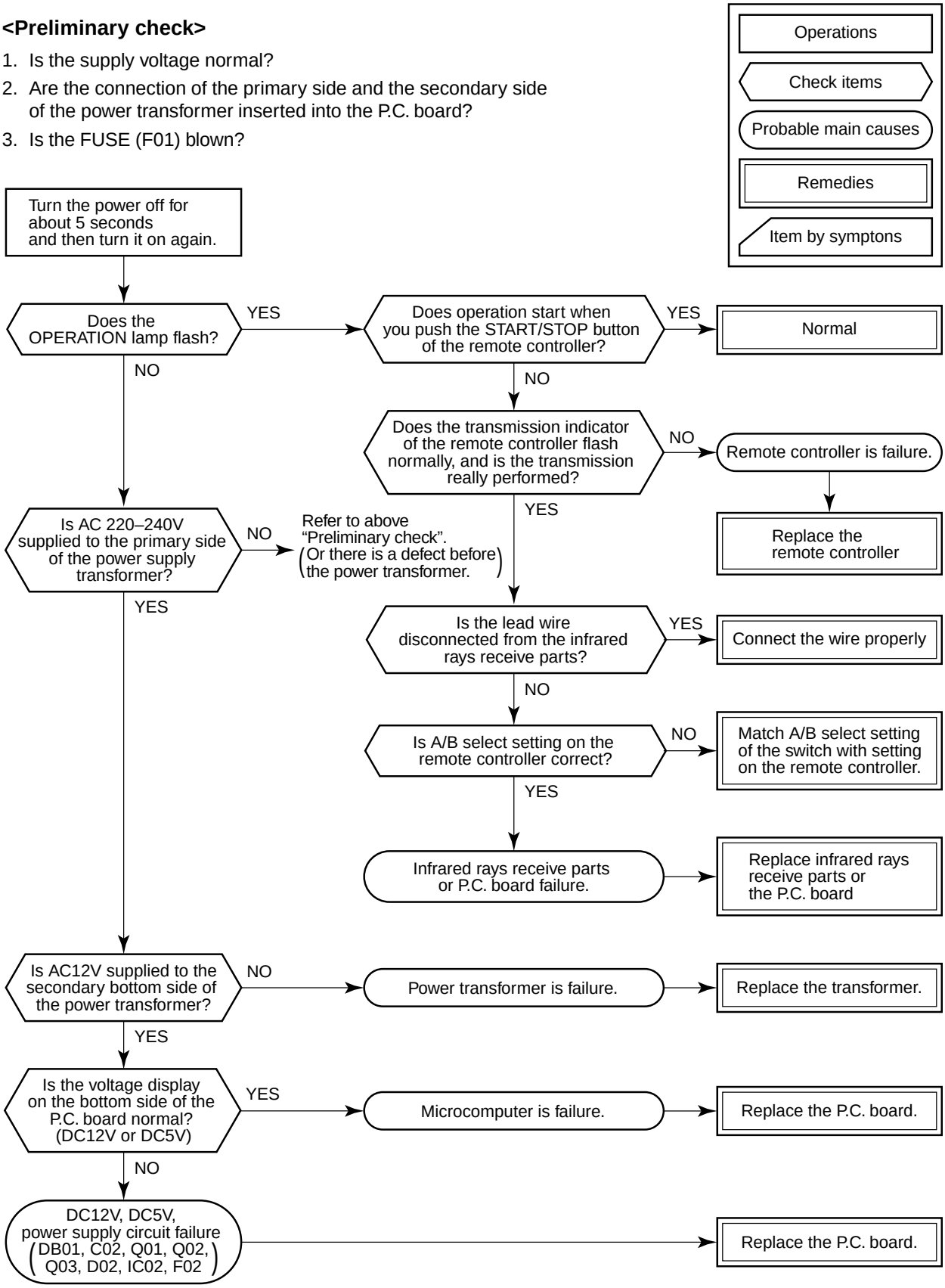

Downloaded from www.Manualslib.com manuals search engine

(2) Power is not turned on though Indoor P.C. board is replaced

<Confirmation procedure>

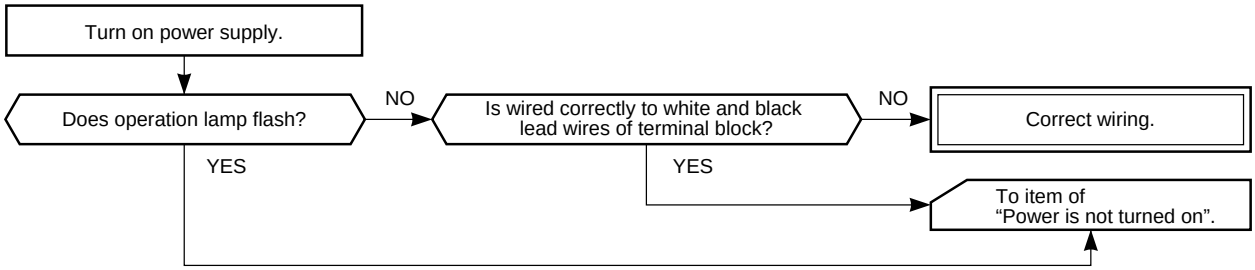

(3) Only the indoor fan does not operate

<Preliminary check>

1. Is the socket voltage 220–240V?
2. Does not the indoor fan rotate in cooling operation?
   (In heating operation, the indoor fan does not rotate to prevent cool air blowing when the unit has been activated.)

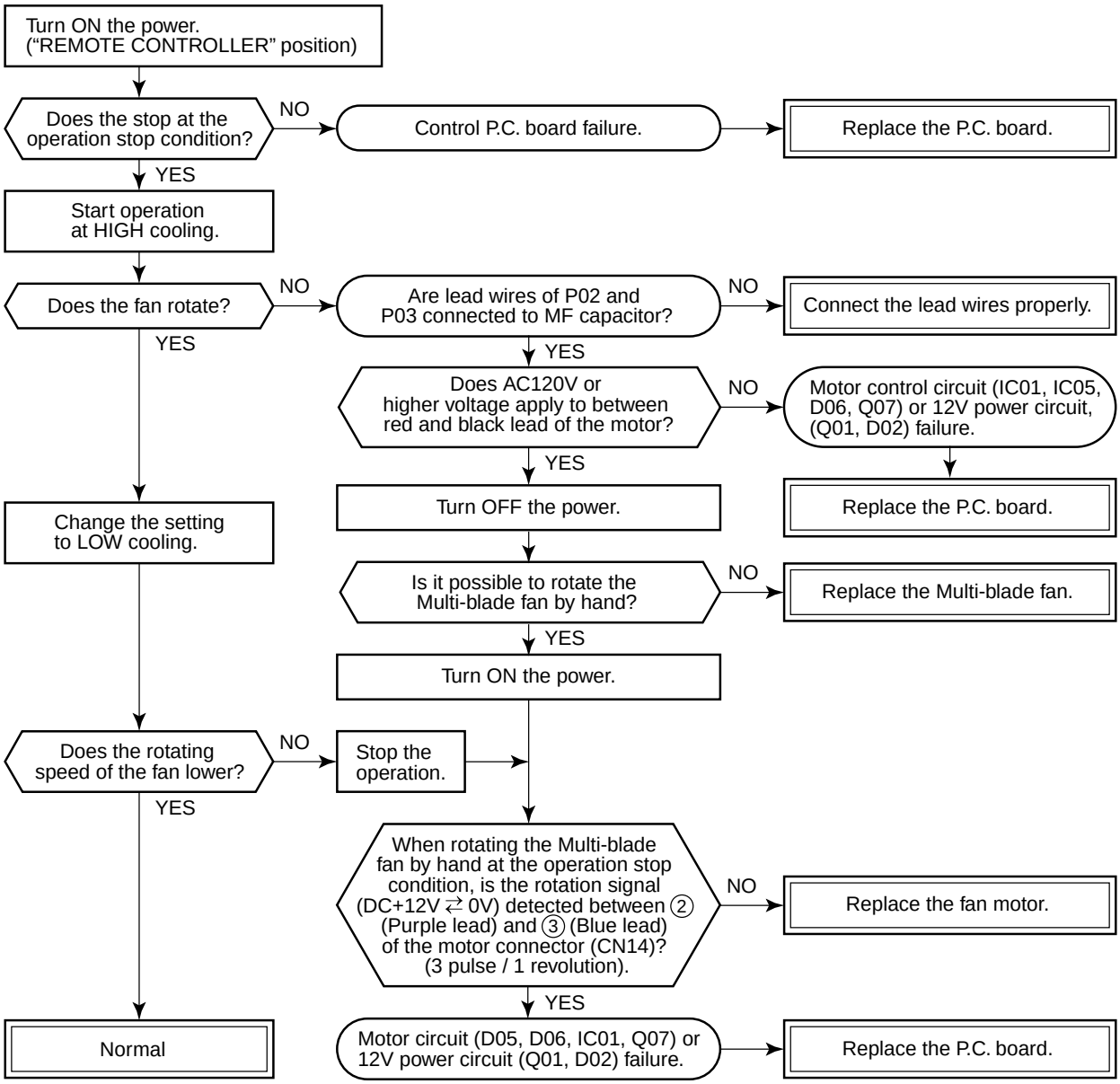

Downloaded from www.Manualslib.com manuals search engine

(4) How to examine whether remote controller is good or bad

<Preliminary check>

1. Does setting (A/B) of the remote controller selection match with that indoor unit (switch panel) ?

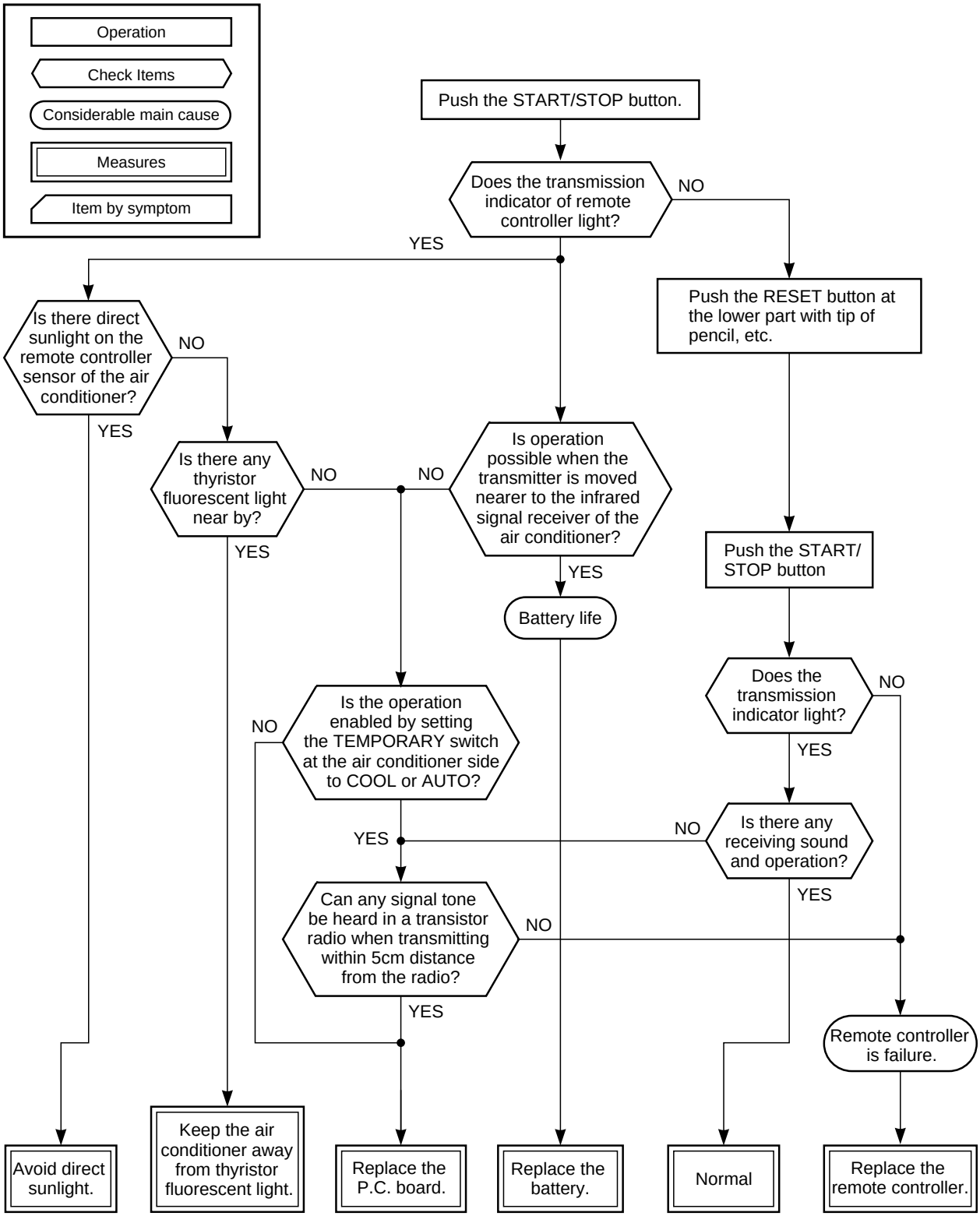

Downloaded from www.Manualslib.com manuals search engine

11-6. How to Check Simply the Main Parts

11-6-1. How to Check the P.C. Board (Indoor Unit)

1. Operating precautions

1) When removing the electric parts box or the P.C. board, be sure to shut off the power supply breaker.
2) When removing the P.C. board, hold the edge of the P.C. board and do not apply force to the parts.
3) When connecting or disconnecting the connectors on the P.C. board, hold the whole housing. Do not pull at the lead wire.

2. Inspection procedures

1) When the P.C. board is judged to be defective, check for disconnection, burning, or discoloration of the copper foil pattern or this P.C. board.
2) The P.C. board consists of the following 2 parts

a. Main P.C. board part :

DC power supply circuit (5V, 12V), Indoor fan motor control circuit, CPU and peripheral circuits, buzzer.

b. Indication unit of infrared ray receiving Infrared ray receiving circuit, LED :

To check defect of the P.C. board, follow the procedure described below.

3. Check procedures

Table 11-6-1

No.	Procedure	Check point (Symptom)	Causes
1	Shut off the power supply and remove the P.C. board assembly from the electronic parts base. Remove the connecting cable from the terminal block.	1. Is the fuse (F01) blown?	1.* Application of shock voltage. * Overload by short-circuit of the parts.
2	Turn the power on. If the OPERATION lamp flashes (0.5 sec. : ON, 0.5 sec. : OFF) when the power turning on, the checking points described as 1-3 of right column are not necessary to perform.	Voltage check 1. Between Pin1 and Pin 3 of CN03 (AC 220–240V) 2. Between + and - of C02 (DC 12 to 17V) 3. Between 12V and GND 4. Between 5 V and GND	1.* Miss wiring of crossover cable. * Poor contact of the terminal plate. 2.* Transformer (TT-03) is defective. * Chip fuse (F02) is defective. 3. Q01, D02, F02, DB01 are defective. 4. F02, Q02, Q03, IC02 are defective.
3	Make the operation status by pusing once the START/STOP button, except the status of [FAN ONLY], [ON TIMER].	Voltage check 1. Voltage of relay coil. (DC12V → 0V) Between pin 10 of IC06 and GND 2. Between No.1 and 2 of connecting cable terminal block.(AC 220–240V)	1. Breaking wire of the relay coil, defective relay driver. (IC06)
4	Start the operation with the system which the time of the restart delay timer is shortened.	1. All indicators light for 3 sec. 2. Indicators do not indicate normally after approximate 3 sec.	} Defective indicator, or poor housing assembly. (CN05, CN11)
5	Make the operation status by pusing once the START/STOP button. 1. The time of the restart delay timer is shortened. 2. Cool operation 3. Air volume [AUTO] 4. Make the setting temperature lower enough than room temperature. 5. Continuous operation.	1. Compressor does not operate. 2. OPERATION lamp flashes.	1. The temperature of the indoor heat exchanger is abnormally low. 2. Poor contact of the heat exchanger sensor. (The connector is disconnected.) (CN12) 3. Heat exchanger sensor, room temp. sensor are defective. 4. Main P.C. board is defective.
6	Start the operation with the following condition. 1. Operation [Cooling] 2. Airflow [High fan] 3. Continuous operation	1. Motor does not rotate. (The key operation is accepted.) 2. The motor rotates, but it vibrates too much.	1. Poor contact of CN15 of the motor connector. 2. Poor contact CN14 of the motor connector.

Downloaded from www.Manualslib.com manuals search engine

11-6-2. P.C. Board Layout

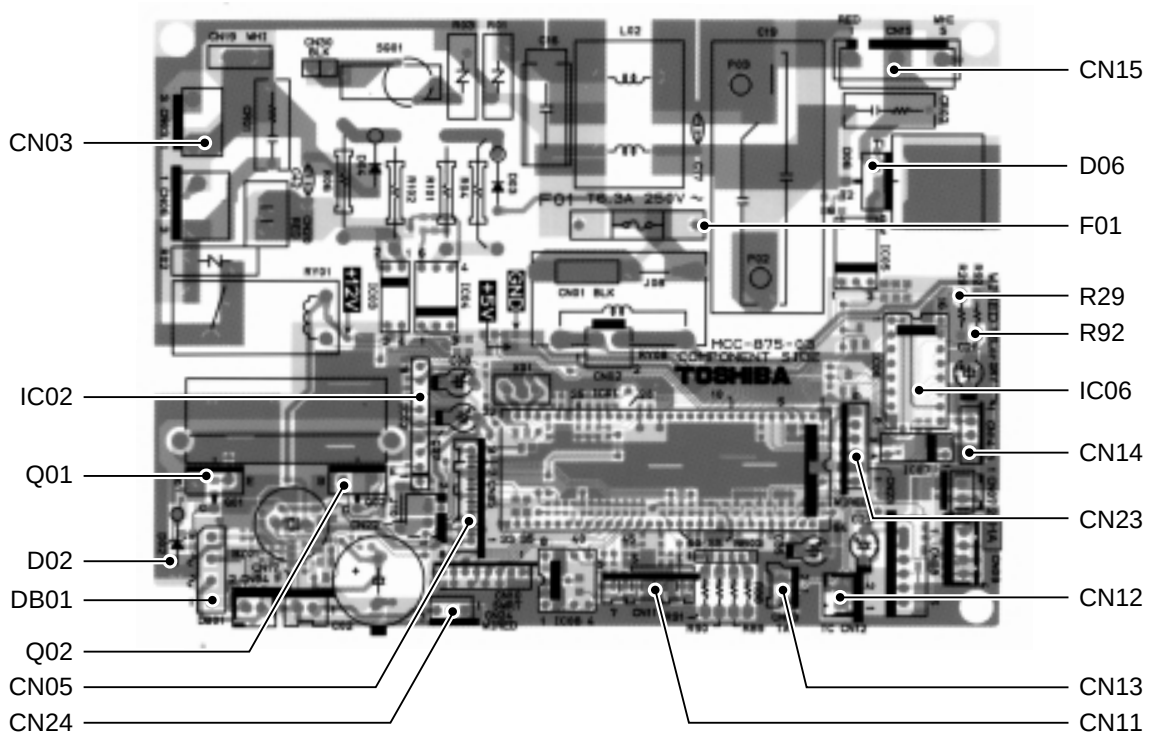

<Top View>

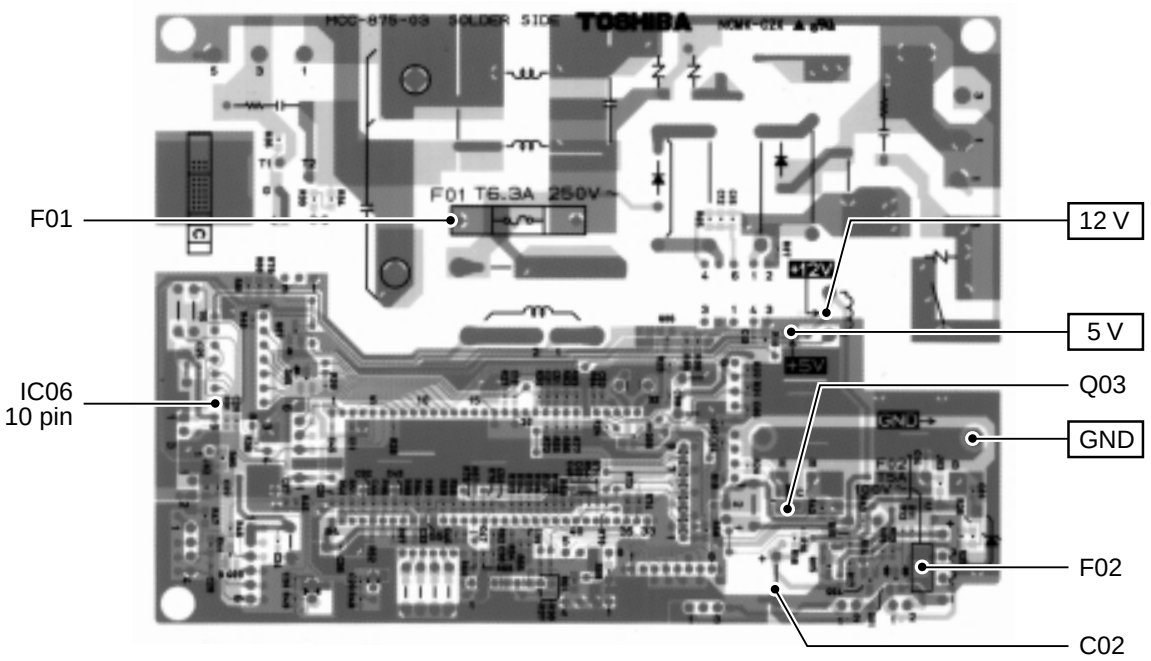

<Bottom View>

Downloaded from www.Manualslib.com manuals search engine

<Sensor characteristic table>

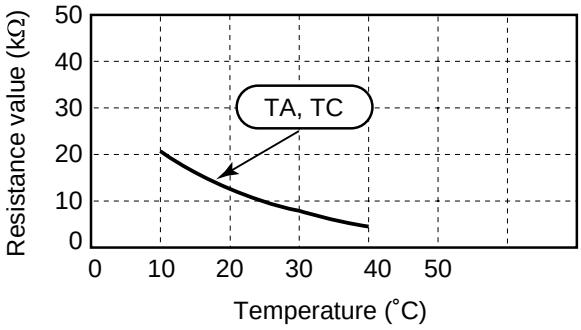

TA : Room temp. sensor
TC : Heat exchanger temp. sensor

11-6-3. Indoor Unit (Other Parts)

No.	Part name	Checking procedure
1	Room temp. (TA) sensor Heat exchanger (TC) sensor	Disconnect the connector and measure the resistance value with tester. (Normal temp.)

Sensor \ Temperature	10°C	20°C	25°C	30°C	40°C
TA, TC (kΩ)	20.7	12.6	10.0	7.9	4.5

No.	Part name	Checking procedure
2	Remote controller	To item of How to judge whether remote controller is good or bad of the Judgment of trouble by symptom.
3	Indoor fan motor (MF-200-60-4R)	• Using a tester, measure the resistance value of each winding coil. • For P.C. board side, proceed to the item “Only indoor fan does not operate” of “Judgment of Trouble by Every Symptom”.

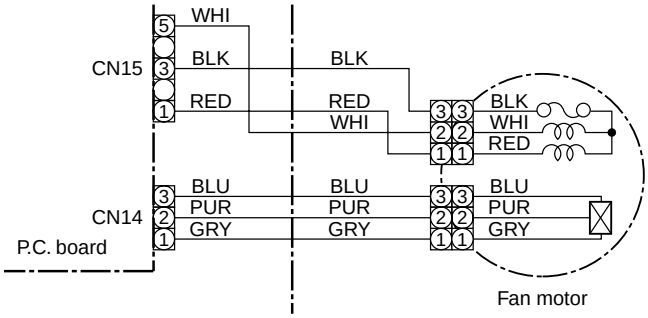

Position (P.C. board)	Resistance value
Between ③ (Black) – ① (Red)	74 ± 15 Ω
Between ③ (Black) – ⑤ (White)	100 ± 20 Ω
Between ① (Red) – ⑤ (White)	174 ± 35 Ω

Downloaded from www.Manualslib.com manuals search engine

12. HOW TO REPLACE THE MAIN PARTS

WARNING

When handling the electric parts, be sure to turn off the power supply breaker because high voltage is electrified.

If failing to pull out the power supply plug or to turn off the breaker, an electric shock may be caused.

After repairs, carry out a trial operation and check there is no trouble such as smoke or abnormal sound.

Otherwise, a fire or electric shock may be caused.

Cautions on repairs for refrigeration cycle

(1) Be careful to fire near by. If using a gas stove, etc., be sure to turn off the switch. If failing to do so, the oil mixed with refrigerant gas may catch fire.

(2) Do not use a welding machine in the closed room. If ventilation is failed, poisoning of carbon monoxide may be caused.

(3) Do not lay flammables. The fire of the welding machine may catch the flammables.

12-1. Indoor Unit

No.	Part name	Procedure	Remaks
1	Fan motor Multi-blade fan	1) Remove 8 fixing screws (Ø4 x 8L) of the suction cover. 2) Remove two motor lead wires from connector of the fan motor. 3) Remove TA sensor lead from P-shape clamp. 4) Remove 8 fixing screws (Ø4 x 10L) of the suction cover. 5) Remove 4 fixing screws (FT screw) of the motor cover. **WARNING** • When removing the four fixing screws of the motor cover, the fan and fan motor come down simultaneously. Be sure to deposit the motor cover while holding it by hands. Otherwise, it may be resulted in falling of motor with heavy weight. **NOTE :** • In reassembling, do not pull each lead wire exceedingly to the fan motor with a little margin. If it is pulled exceedingly, an abnormal sound may be caused.	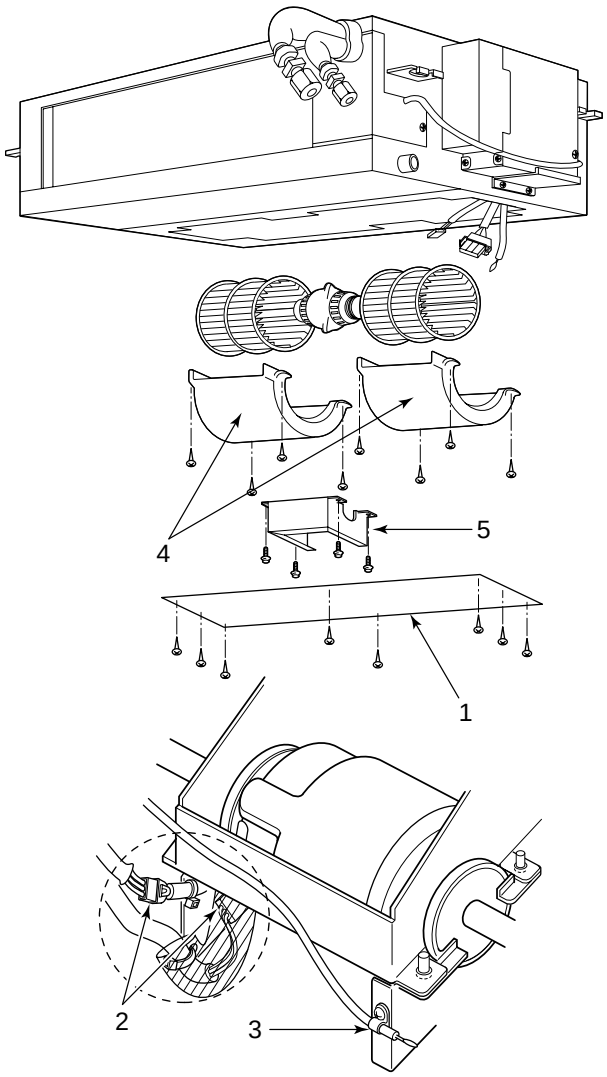

Downloaded from www.Manualslib.com manuals search engine

No.	Part name	Procedure	Remaks
2	Electrical parts assembly	1) Remove two fixing screws (Ø4x10L) of the TC sensor cover to remove the sensor cover. 2) Remove TC sensor from the heat exchanger. 3) Disconnect the connector inserted in the connector at the rear side of the electric parts box. 4) Remove cover of the terminal block. (Ø4x10L : Grade 3 with washer) 5) Remove two fixing screws (Ø4x10L) of the electric parts box to pull out the electric parts box. 6) Remove two fixing screws (Ø4x10L) of the electric parts box cover to take out the electric parts box cover.	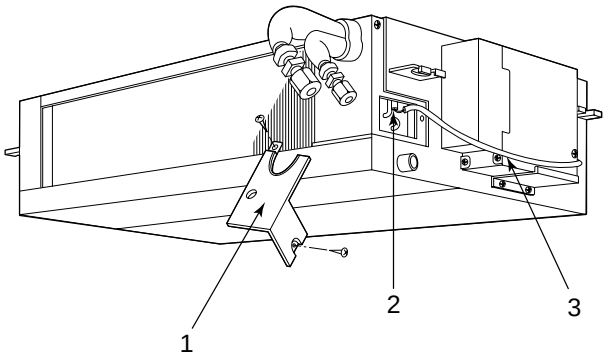 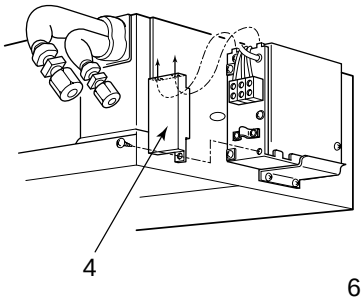 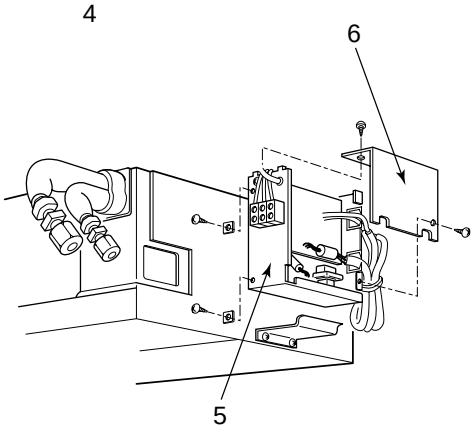

Downloaded from www.Manualslib.com manuals search engine

13. EXPLODED VIEWS AND PARTS LIST

13-1. Indoor Unit (1)

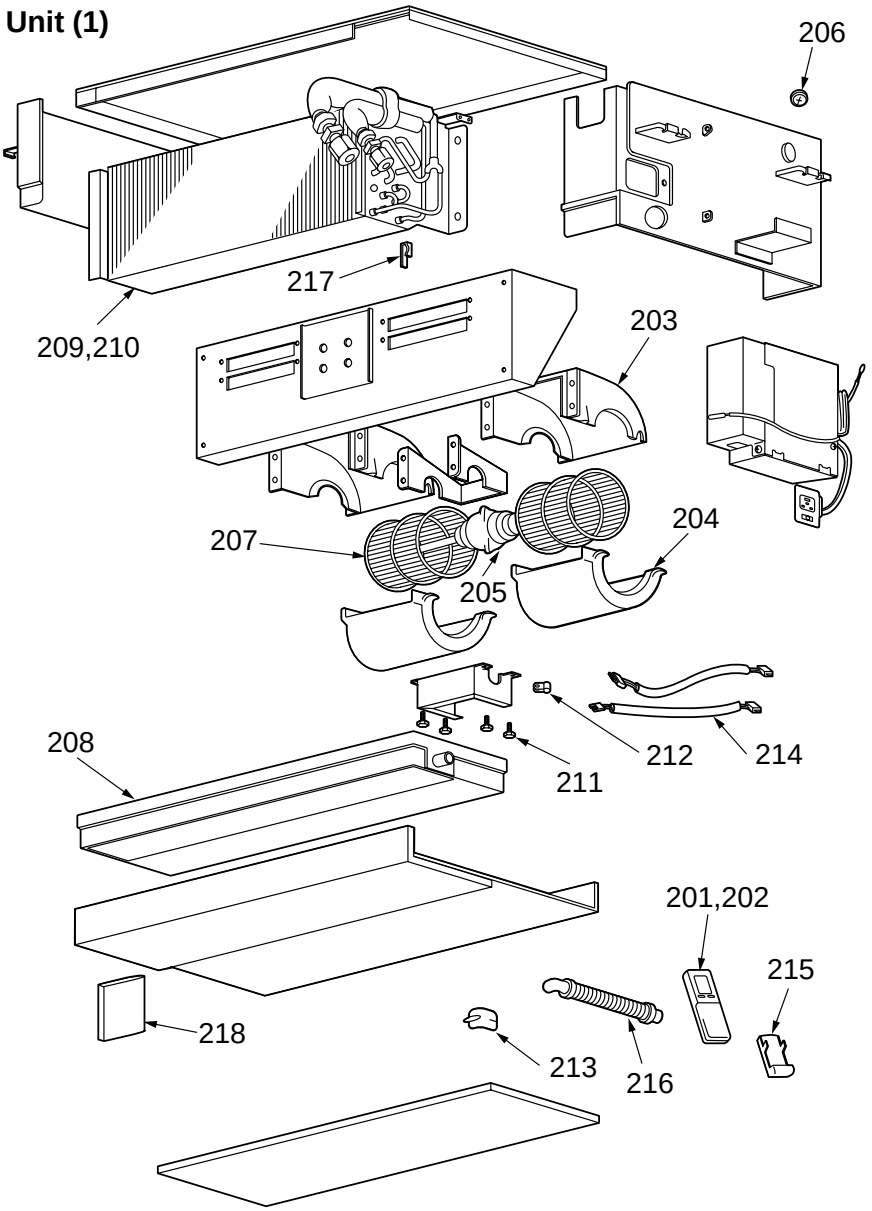

∗ The parts in the following parts list are conformed to RoHS. Therefore be sure to use the following parts for repairing and replacing.

Location No.	Part No.	Description
201	4306S694	Remote Controller (M10GDCV-E, M13GDCV-E, M16GDCV-E)
202	4306S695	Remote Controller (M10GDV-E, M13GDV-E, M16GDV-E)
203	43022442	Fan Case, Up
204	43022443	Fan Case, Down
205	4302C066	Motor, Fan, AC
206	43019830	Bushing
207	43020347	Fan, Multiblade
208	43072369	Pan Ass'y, Drain

Location No.	Part No.	Description
209	43044801	Refrigeration Cycle Ass'y (M10GDCV-E, M13GDCV-E M10GDV-E, M13GDV-E)
210	43044802	Refrigeration Cycle Ass'y (M16GDCV-E, M16GDV-E)
211	43097217	Screw
212	43060643	Clamp, Cord
213	43089132	Cover, Terminal Insulator
214	4306A131	Connector Ass'y, FM
215	43063329	Holder, Remote controller
216	43070189	Hose, Drain
217	43019904	Holder, Sensor
218	4308N733	Manual

Downloaded from www.Manualslib.com manuals search engine

13-1. Indoor Unit (2)

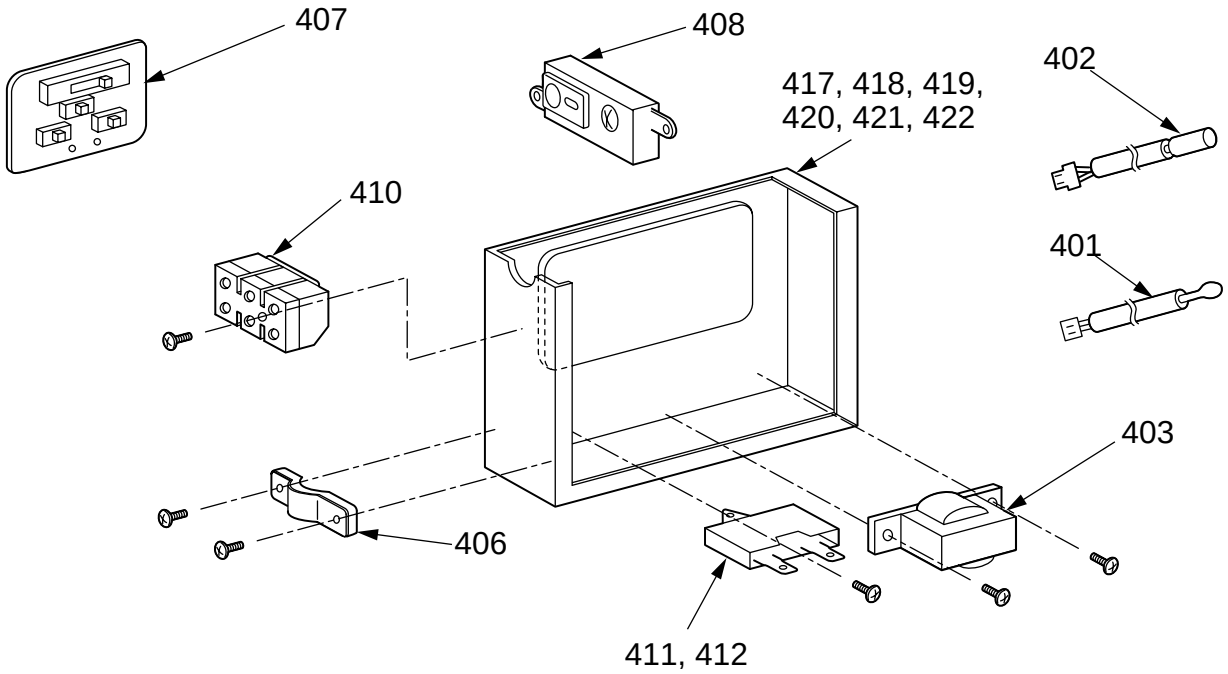

∗ The parts in the following parts list are conformed to RoHS. Therefore be sure to use the following parts for repairing and replacing.

Location No.	Part No.	Description
401	43050426	Sensor, TA
402	43050425	Sensor, TC (F6)
403	43058278	Transfomer, Power, TT-03-3
406	43063342	Clamp, Cord
407	4306S729	P.C. Board Ass'y, Switch
408	4306S700	P.C. Board Ass'y, WRS-LED
410	4306A132	Terminal Block, 3P
411	43055527	Capacitor, Alumifilm, 3.0MFD, 450V (M16GDV-E, M16GDCV-E)

Location No.	Part No.	Description
412	43055528	Capacitor, Alumifilm, 1.5MFD, 450V (M10GDV-E, M10GDCV-E, M13GDV-E, M13GDCV-E)
417	4306S706	P.C. Board Ass'y (M10GDV-E)
418	4306S707	P.C. Board Ass'y (M13GDV-E)
419	4306S708	P.C. Board Ass'y (M16GDV-E)
420	4306S703	P.C. Board Ass'y (M10GDCV-E)
421	4306S704	P.C. Board Ass'y (M13GDCV-E)
422	4306S705	P.C. Board Ass'y (M16GDCV-E)

Downloaded from www.Manualslib.com manuals search engine

13-2. Drain-up Kit (Option)

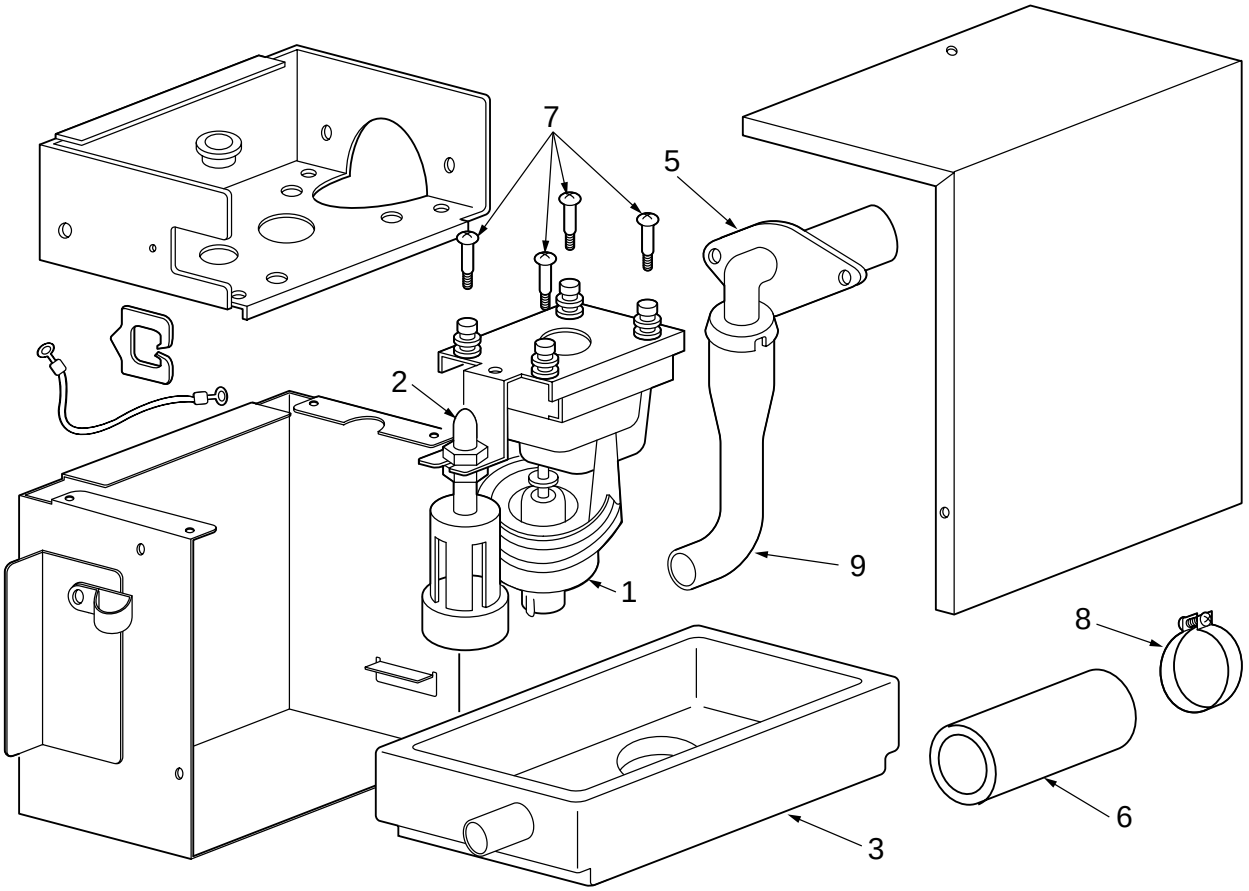

∗ The parts in the following parts list are conformed to RoHS. Therefore be sure to use the following parts for repairing and replacing.

Location No.	Part No.	Description
1	43421004	Pump, Drain, PJV-0764
2	43451016	Switch, Float
3	43072371	Pan, Drain
5	43071020	Outlet, Drain

Location No.	Part No.	Description
6	43070170	Pipe, Drain
7	43097214	Screw, Fix, Pump
8	43079290	Band, Hose
9	43070178	Hose, Drain

∗ The minimum reservation period of the maintenance parts for TOSHIBA air conditioners is defined as 9 years after the manufacturing end.

Downloaded from www.Manualslib.com manuals search engine

This product is compliant with Directive 2002/95/EC, and cannot be disposed as unsorted municipal waste.

TOSHIBA CARRIER CORPORATION
2 CHOME 12-32, KONAN, MINATOKU, TOKYO, 108-0075, JAPAN

Copyright © 1999 to 2005 TOSHIBA CARRIER CORPORATION, ALL Rights Reserved.

Downloaded from www.Manualslib.com manuals search engine