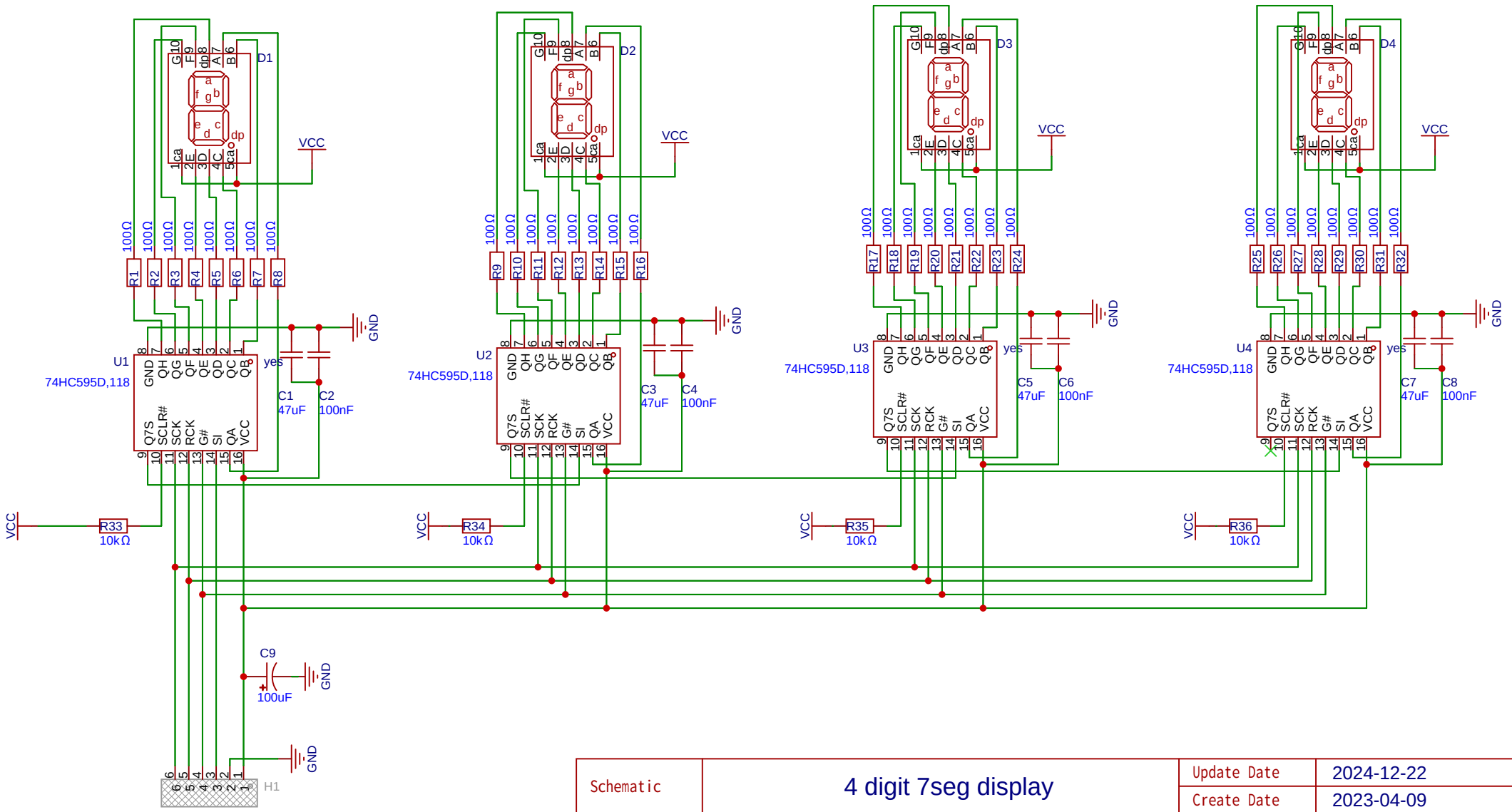

Schematic	4 digit 7seg display	Update Date	2024-12-22
		Create Date	2023-04-09
Page	display	Part Number	NTOCLOCKPCB-002
Drawed	Robin	Chaoticvolt-4 digit 7seg display	
Reviewed	Robin		
		VER	SIZE	PAGE 1 OF 1
EasyEDA		V0.1	A4	Chaoticvolt