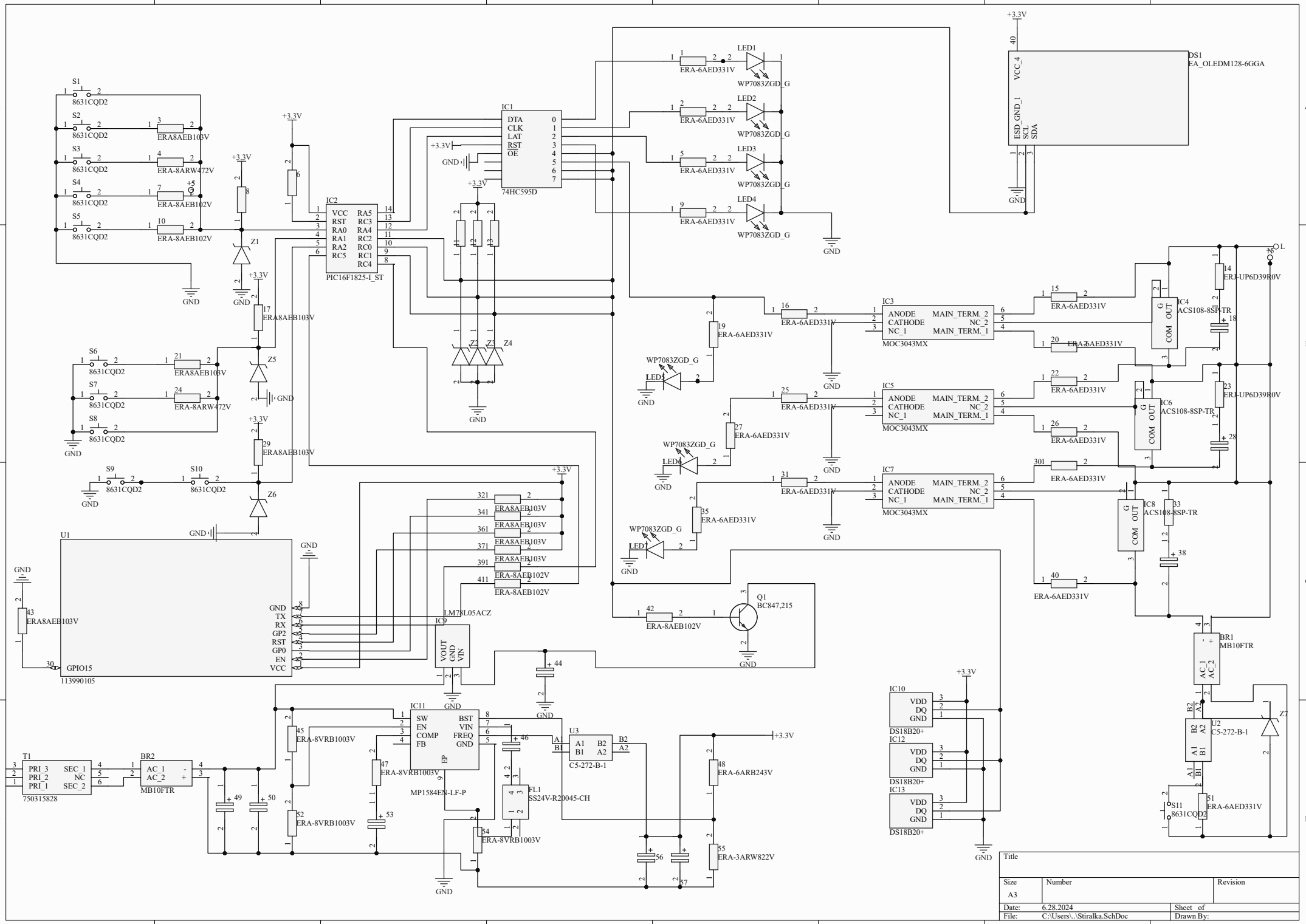
S1
8631CQD2
S2
8631CQD2
ERA8AEB103V
S3
8631CQD2
ERA-8ARW472V
S4
8631CQD2
ERA-8AEB102V
S5
8631CQD2
ERA-8AEB102V
S6
8631CQD2
ERA8AEB103V
S7
8631CQD2
ERA-8ARW472V
S8
8631CQD2
S9
8631CQD2
S10
8631CQD2
Z1
Z2
Z3
Z4
Z5
Z6
Z7
IC1
DTA
CLK
LAT
RST
OE
74HC595D
IC2
VCC
RST
RA0
RA1
RA2
RC5
RA5
RC3
RA4
RC2
RC0
RC1
RC4
PIC16F1825-I_ST
LED1
LED2
LED3
LED4
ERA-6AED331V
WP7083ZGD_G
DS1
EA_OLEDM128-6GGA
VCC_4
ESD_GND_1
SCL
SDA
IC3
IC5
IC7
ANODE
CATHODE
NC_1
MAIN_TERM._2
NC_2
MAIN_TERM._1
MOC3043MX
IC4
IC6
IC8
ACS108-8SP-TR
COM
OUT
G
ERJ-UP6D39R0V
Q1
BC847,215
U1
GND
TX
RX
GP2
RST
GP0
EN
VCC
GPIO15
113990105
IC9
LM78L05ACZ
VOUT
GND
VIN
IC10
IC12
IC13
VDD
DQ
DS18B20+
BR1
MB10FTR
AC_1
AC_2
U2
C5-272-B-1
A1
B1
A2
B2
S11
8631CQD2
T1
PRI_3
PRI_2
PRI_1
SEC_1
NC
SEC_2
750315828
BR2
MB10FTR
IC11
SW
EN
COMP
FB
BST
VIN
FREQ
MP1584EN-LF-P
U3
C5-272-B-1
FL1
SS24V-R20045-CH
ERA-8VRB1003V
ERA-6ARB243V
ERA-3ARW822V
+3.3V
+5
L
N
Title
Size
A3
Number
Revision
Date:
6.28.2024
Sheet of
File:
C:\Users\..\Stiralka.SchDoc
Drawn By: