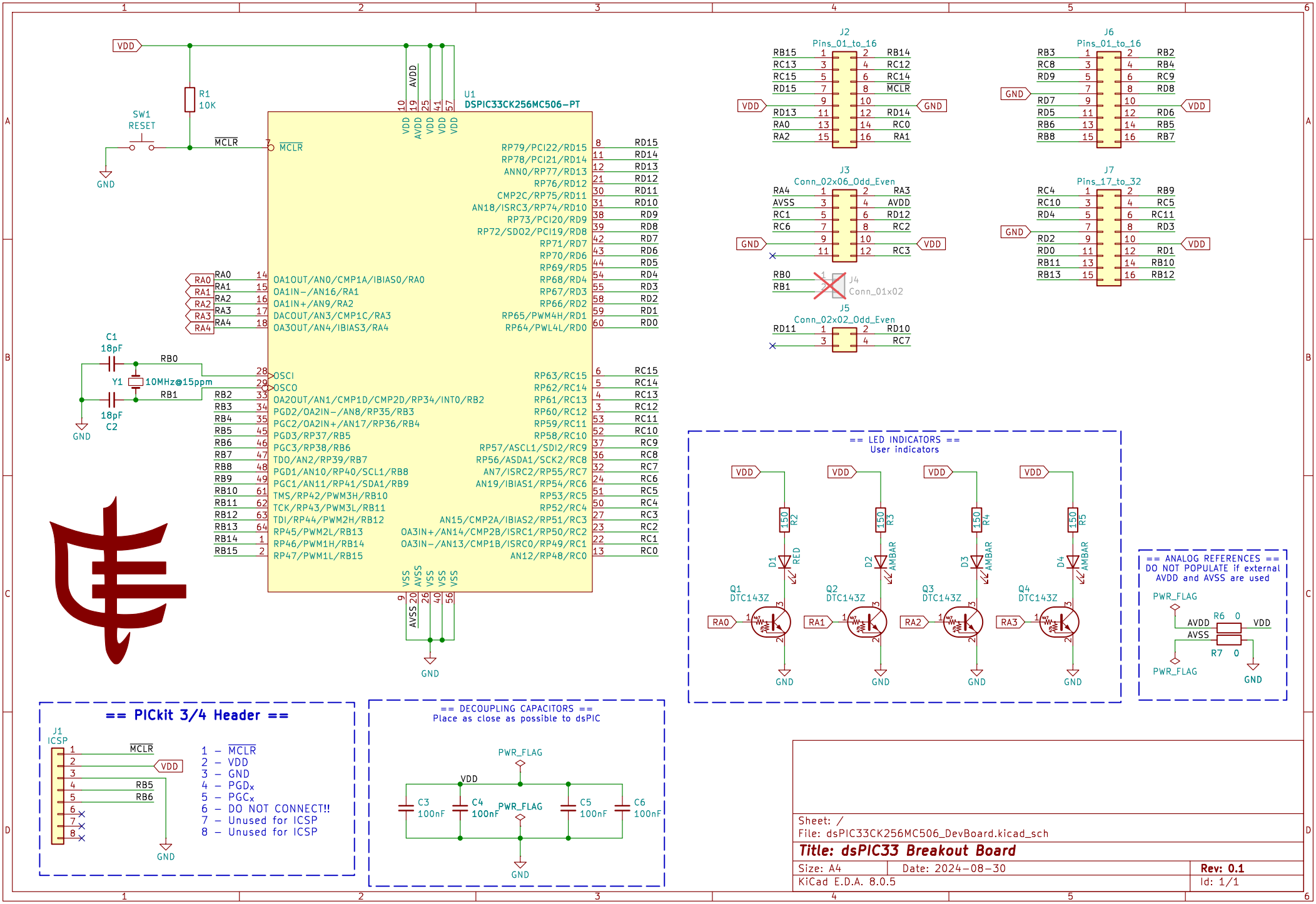
U1
DSPIC33CK256MC506-PT
VDD
R1
10K
SW1
RESET
GND
MCLR
AVDD
VDD
AVDD
VDD
VDD
VDD
MCLR
RP79/PCI22/RD15
RP78/PCI21/RD14
ANN0/RP77/RD13
RP76/RD12
CMP2C/RP75/RD11
AN18/ISRC3/RP74/RD10
RP73/PCI20/RD9
RP72/SDO2/PCI19/RD8
RP71/RD7
RP70/RD6
RP69/RD5
RP68/RD4
RP67/RD3
RP66/RD2
RP65/PWM4H/RD1
RP64/PWL4L/RD0
OA1OUT/AN0/CMP1A/IBIAS0/RA0
OA1IN-/AN16/RA1
OA1IN+/AN9/RA2
DACOUT/AN3/CMP1C/RA3
OA3OUT/AN4/IBIAS3/RA4
OSCI
OSCO
OA2OUT/AN1/CMP1D/CMP2D/RP34/INT0/RB2
PGD2/OA2IN-/AN8/RP35/RB3
PGC2/OA2IN+/AN17/RP36/RB4
PGD3/RP37/RB5
PGC3/RP38/RB6
TDO/AN2/RP39/RB7
PGD1/AN10/RP40/SCL1/RB8
PGC1/AN11/RP41/SDA1/RB9
TMS/RP42/PWM3H/RB10
TCK/RP43/PWM3L/RB11
TDI/RP44/PWM2H/RB12
RP45/PWM2L/RB13
RP46/PWM1H/RB14
RP47/PWM1L/RB15
RP63/RC15
RP62/RC14
RP61/RC13
RP60/RC12
RP59/RC11
RP58/RC10
RP57/ASCL1/SDI2/RC9
RP56/ASDA1/SCK2/RC8
AN7/ISRC2/RP55/RC7
AN19/IBIAS1/RP54/RC6
RP53/RC5
RP52/RC4
AN15/CMP2A/IBIAS2/RP51/RC3
OA3IN+/AN14/CMP2B/ISRC1/RP50/RC2
OA3IN-/AN13/CMP1B/ISRC0/RP49/RC1
AN12/RP48/RC0
VSS
AVSS
VSS
VSS
VSS
AVSS
GND
C1
18pF
C2
18pF
Y1
10MHz@15ppm
RB0
RB1
GND
J2
Pins_01_to_16
J6
Pins_01_to_16
J3
Conn_02x06_Odd_Even
J7
Pins_17_to_32
J4
Conn_01x02
J5
Conn_02x02_Odd_Even
== LED INDICATORS ==
User indicators
R2 150
R3 150
R4 150
R5 150
D1 RED
D2 AMBAR
D3 AMBAR
D4 AMBAR
Q1 DTC143Z
Q2 DTC143Z
Q3 DTC143Z
Q4 DTC143Z
== ANALOG REFERENCES ==
DO NOT POPULATE if external
AVDD and AVSS are used
PWR_FLAG
R6 0
R7 0
== PICkit 3/4 Header ==
J1
ICSP
1 - MCLR
2 - VDD
3 - GND
4 - PGDx
5 - PGCx
6 - DO NOT CONNECT!!
7 - Unused for ICSP
8 - Unused for ICSP
== DECOUPLING CAPACITORS ==
Place as close as possible to dsPIC
C3 100nF
C4 100nF
C5 100nF
C6 100nF
Sheet: /
File: dsPIC33CK256MC506_DevBoard.kicad_sch
Title: dsPIC33 Breakout Board
Size: A4
Date: 2024-08-30
Rev: 0.1
KiCad E.D.A. 8.0.5
Id: 1/1