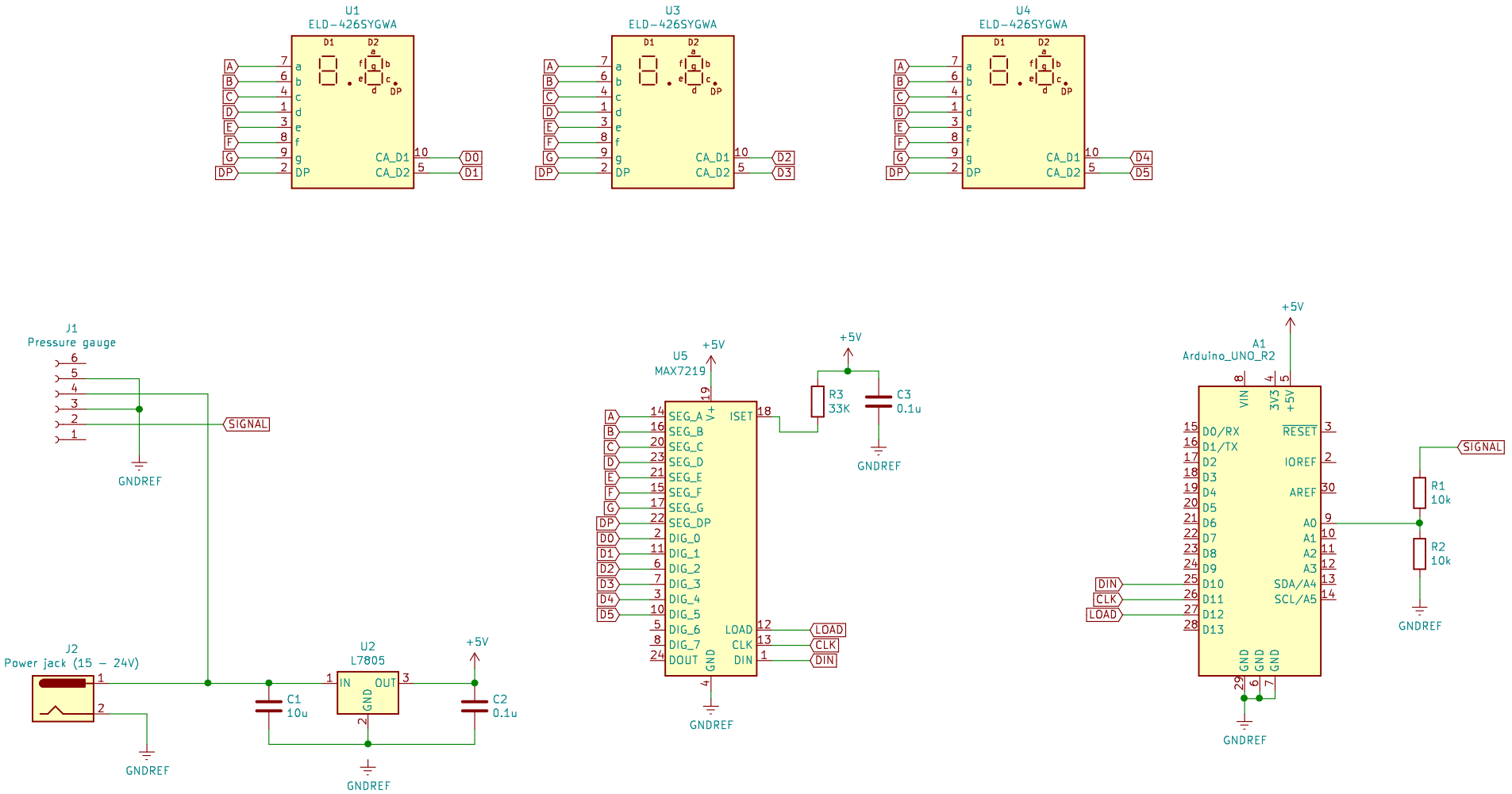

Simple pressure gauge controller

Sheet: /
File: pressure_controller.sch

Title: Pressure controller

Size: A4	Date: 2021-07-22	Rev:
KiCad E.D.A. kicad 5.1.10		Id: 1/1