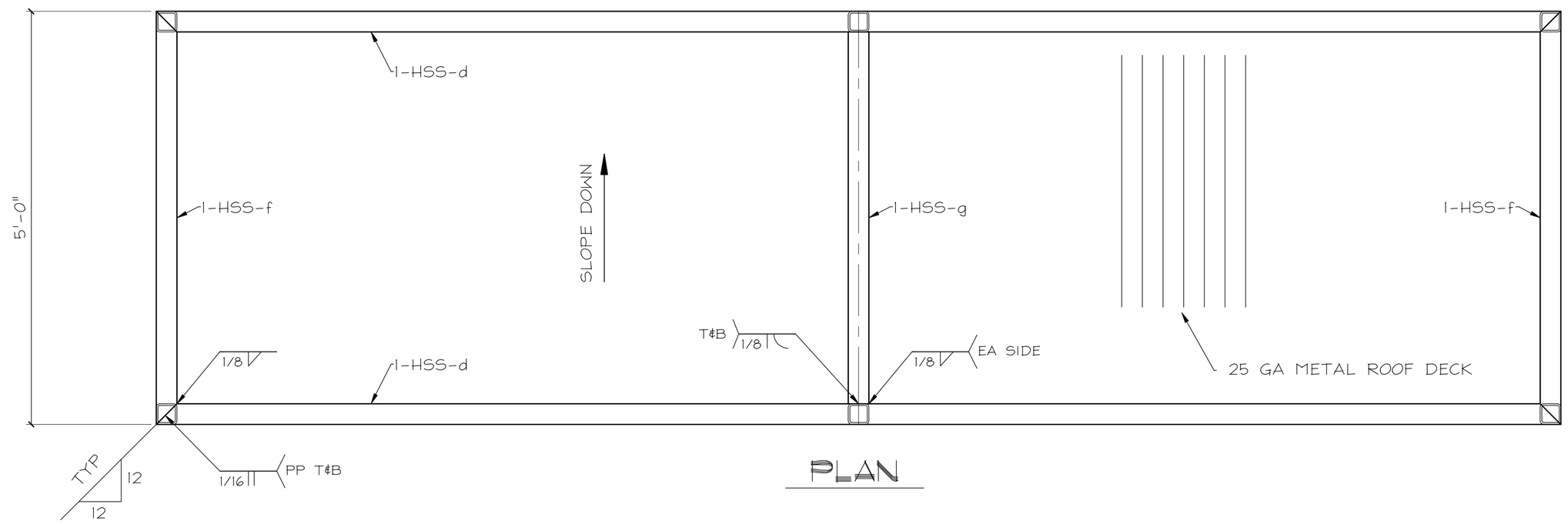

PLAN

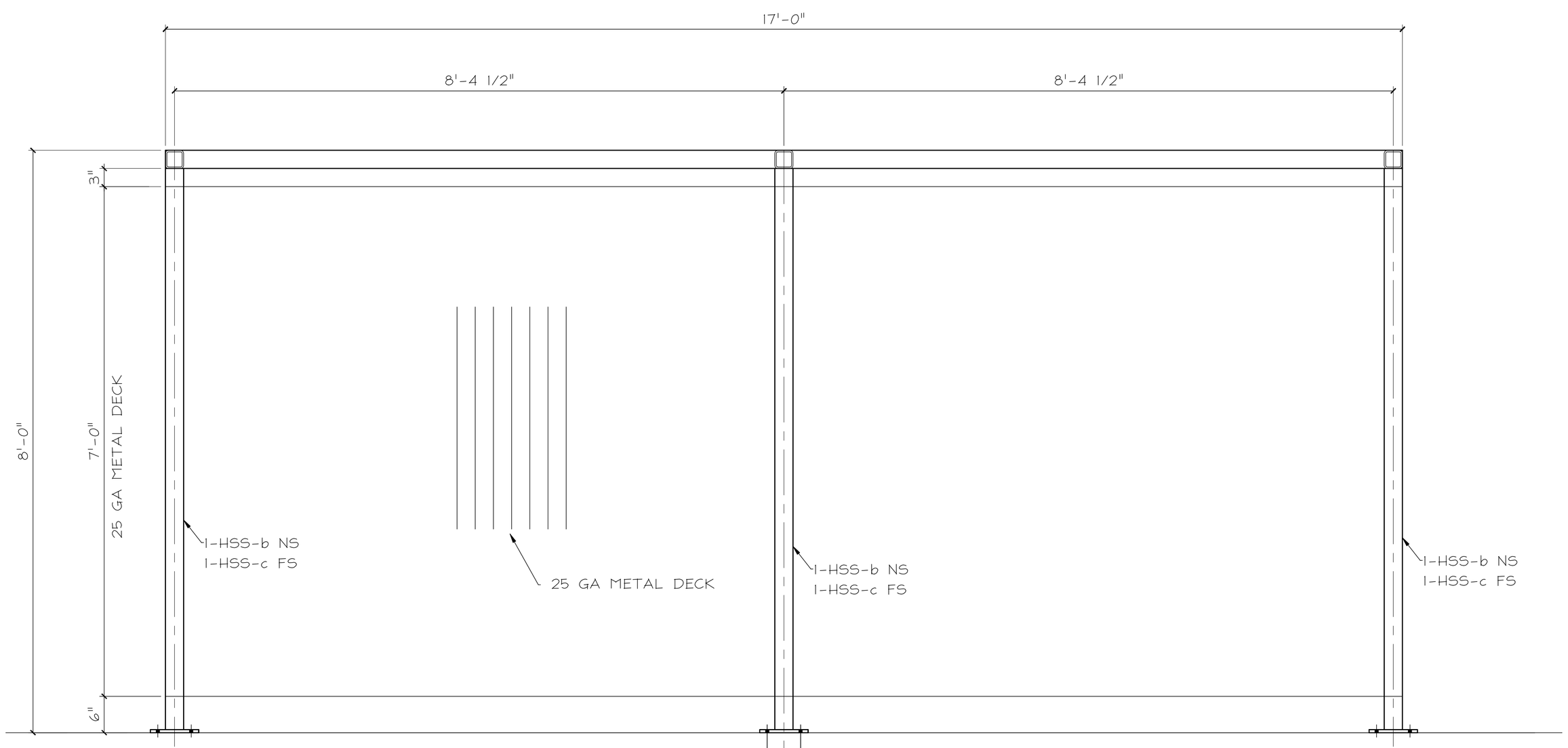

ELEVATION

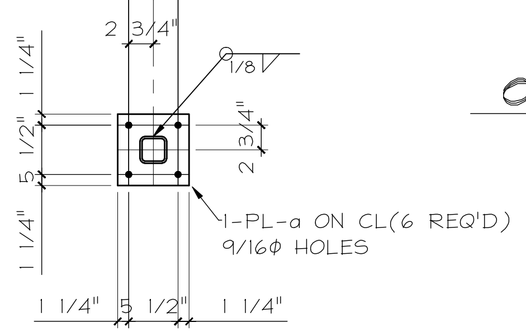

ONE - FRAME - 1A

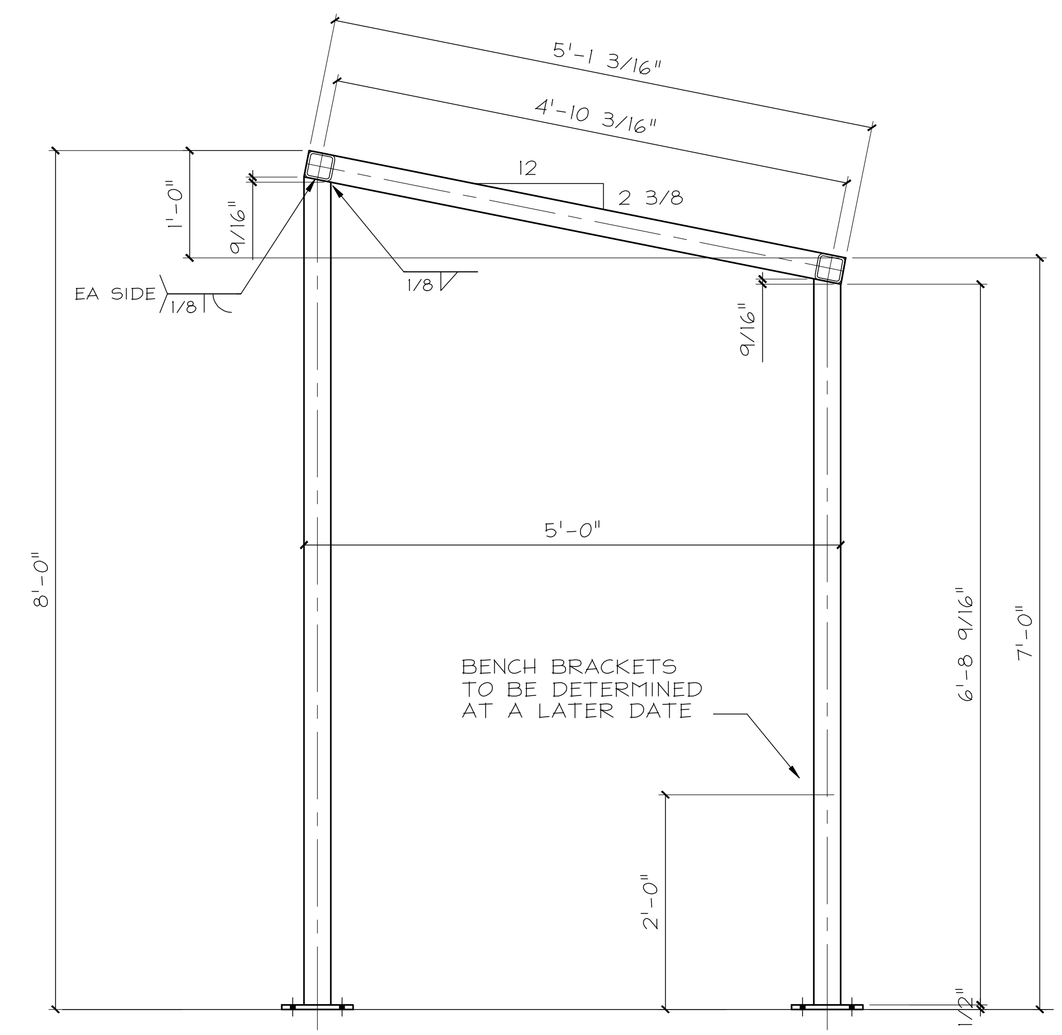

ELEVATION

BILL OF MATERIALS

NO.TO SHIP	SHIP MARK	TOTAL PCS.	PC. MARK	DESCRIPTION	LENGTH FT.	LENGTH IN.	REMARKS
ONE	1A			FRAME			
		6	a	PL1/2x8	0	8	
		3	b	HSS3x3x3/16	7	8 9/16	
		3	c	HSS3x3x3/16	6	9 1/8	
		2	d	HSS3x3x1/8	17	0	
		2	f	HSS3x3x1/8	5	1 3/16	
		1	g	HSS3x3x1/8	4	7 3/16	
			25GA	METAL DECK 204 x	7	0	
			25GA	METAL DECK 204 x	5	1	
				FIELD BOLTS			
		24		1/2Φ EXP BOLTS	0	6	

INSPECTION	
BY:	
WELDING: E71T-1	
TESTING: VISUAL-MP-US-XR	
STAMPED DWGS	

CARLSON STEEL WORKS INC.
2001 GRANT ST BELLINGHAM, WA 98225
Phone (360) 734-1100 FAX (360) 734-1103

HOLES: AS NTD
EDGE DIST.: AS NTD
PAINT: POWDER COAT

DR.BY R.ESSER
DATE: 2-17
CHK.BY: ER
DATE: 2-17

NO.	DATE	BY	REVISIONS
1			

JOB: CITY OF FERNDALE CUBSCOUT SHELTER
LOCATION: FERNDALE, WA
CONTRACTOR:

COVERED SHELTER

PRINT RECORD

NO.	USE	DATE
	APPR	
	APPR	
	DISTR.	
	SHOP	
	SHOP	

JOB NO.
DWG.NO. ONE
REV.